This international standard was developed in accordance with internationally recognized principles on standardization established in the Decision on Principles for the Development of International Standards, Guides and Recommendations issued by the World Trade Organization Technical Barriers to Trade (TBT) Committee.

Designation: C1624 – 22

Standard Test Method for Adhesion Strength and Mechanical Failure Modes of Ceramic Coatings by Quantitative Single Point Scratch Testing[1]

This standard is issued under the fixed designation C1624; the number immediately following the designation indicates the year of original adoption or, in the case of revision, the year of last revision. A number in parentheses indicates the year of last reapproval. A superscript epsilon (ε) indicates an editorial change since the last revision or reapproval.

1. Scope

1.1 This test method covers the determination of the practical adhesion strength and mechanical failure modes of hard (Vickers Hardness HV = 5 GPa or higher), thin (≤30 µm) ceramic coatings on metal and ceramic substrates at ambient temperatures. These ceramic coatings are commonly used for wear/abrasion resistance, oxidation protection, and functional (optical, magnetic, electronic, biological) performance improvement.

1.2 In the test method, a diamond stylus of defined geometry (Rockwell C, a conical diamond indenter with an included angle of 120° and a spherical tip radius of 200 µm) is drawn across the flat surface of a coated test specimen at a constant speed and a defined normal force (constant or progressively increasing) for a defined distance. The damage along the scratch track is microscopically assessed as a function of the applied force. Specific levels of progressive damage are associated with increasing normal stylus forces. The force level(s) which produce a specific type/level of damage in the coating are defined as a critical scratch load(s). The test method also describes the use of tangential force and acoustic emission signals as secondary test data to identify different coating damage levels.

1.3 *Applicability to Coatings*—This test method is applicable to a wide range of hard ceramic coating compositions: carbides, nitrides, oxides, diamond, and diamond-like carbon on ceramic and metal substrates. The test method, as defined with the 200 µm radius diamond stylus, is commonly used for coating thicknesses in the range of 0.1 to 30 µm. Test specimens generally have a planar surface for testing, but cylinder geometries can also be tested with an appropriate fixture.

1.4 *Principal Limitations:*

1.4.1 The test method does not measure the fundamental adhesion strength of the bond between the coating and the substrate. Rather, the test method gives an engineering measurement of the practical (extrinsic) adhesion strength of a coating-substrate system, which depends on the complex interaction of the test parameters (stylus properties and geometry, loading rate, displacement rate, and so forth) and the coating-substrate properties (hardness, fracture strength, modulus of elasticity, damage mechanisms, microstructure, flaw population, surface roughness, and so forth).

1.4.2 The defined test method is not directly applicable to metal or polymeric coatings which fail in a ductile, plastic manner, because plastic deformation mechanisms are very different than the brittle damage modes and features observed in hard ceramic coatings. The test method may be applicable to hard metal coatings which fail in a brittle mode with appropriate changes in test parameters and damage analysis procedures and criteria.

1.4.3 The test method, as defined with the Rockwell C diamond stylus and specific normal force and rate parameters, is not recommended for very thin (<0.1 µm) or thicker coatings (>30 µm). Such coatings may require different stylus geometries, loading rates, and ranges of applied normal force for usable, accurate, repeatable results.

1.4.4 The values stated in SI units are to be regarded as standard. No other units of measurement are included in this standard. Test data values in SI units (newtons (N) for force and millimetres (mm) for displacement) are to be considered as standard and are in accordance with IEEE/ASTM SI 10.

1.5 *Organization*—The test method is organized into the following sections:

	Section
Scope	1
Purpose and Description	1.1
Applicability	1.3
Principal Limitations	1.4
Organization	1.5
Referenced Documents	2
ASTM Standards	2.1
Other Standards and References	2.2
Terminology	3
Summary of Test Method	4
Significance and Use	5

[1] This test method is under the jurisdiction of ASTM Committee C28 on Advanced Ceramics and is the direct responsibility of Subcommittee C28.04 on Applications.

Current edition approved March 15, 2022. Published March 2022. Originally approved in 2005. Last previous edition approved in 2015 as C1624 – 05 (2015). DOI: 10.1520/C1624-22.

Copyright © ASTM International, 100 Barr Harbor Drive, PO Box C700, West Conshohocken, PA 19428-2959. United States

Documents
Document Sharing Hub
Full document details: ASTM C1624-22

	Section
Test Methodology and Experimental Control	6
Test Overview	6.1
Test Modes	6.2
Primary and Supplementary Measurements	6.3
Critical Scratch Load Damage Criteria and Scratch Atlas	6.4
Experimental Factors and Variables	6.5
Interferences	7
Material and Specimen Related	7.2
Test Method Related	7.3
Apparatus	8
General Description	8.1
Stylus and Stylus Mounting	8.2
Mechanical Stage and Displacement Control	8.3
Test Frame and Force Application System	8.4
Force and Displacement Sensors	8.5
Optical Analysis and Measurement	8.6
Data Acquisition and Recording	8.7
Acoustic Emission (Optional)	8.8
Coating Adhesion Reference Specimens (Optional)	8.9
Coating Surface Profilometry (Optional)	8.10
Data Analysis and Output Software (Optional)	8.11
Test Specimens	9
Specimen Requirements	9.1
Specimen Characterization	9.2
Specimen Size	9.3
Specimen Flatness and Level	9.4
Polishing (Optional)	9.5
Specimen Exposure Conditioning (Optional)	9.6
Specimen Cleaning	9.7
Specimen Handling and Storage	9.8
Calibration	10
System Calibration	10.1
Reference Specimens	10.2
Test Procedure	11
Calibration	11.1
Test Mode Selection	11.2
Test Planning	11.3
Stylus Inspection and Cleaning	11.4
Environmental Conditions	11.5
System Setup and Check	11.6
Test Specimen Mounting	11.7
Conducting the Test	11.8
Specimen Count	11.9
Invalid and Censored Data	11.10
Scratch Damage Assessment	11.11
Calculations	12
Report	13
Test Identification	13.2
Specimen Information	13.3
Test Equipment and Procedure Information	13.4
Test Data and Statistics	13.5
Precision and Bias	14
Keywords	15
Rockwell Diamond Indenter Specifications	Annex A1
Alignment and Calibration	Annex A2
Repeatability and Reproducibility Studies	Annex A3
Coating Damage Criteria and Scratch Atlas	Appendix X1
Experimental Variables in Scratch Adhesion Testing	Appendix X2
Bibliography	

1.6 *This standard does not purport to address all of the safety concerns, if any, associated with its use. It is the responsibility of the user of this standard to establish appropriate safety, health, and environmental practices and determine the applicability of regulatory limitations prior to use.*

1.7 *This international standard was developed in accordance with internationally recognized principles on standardization established in the Decision on Principles for the Development of International Standards, Guides and Recommendations issued by the World Trade Organization Technical Barriers to Trade (TBT) Committee.*

2. Referenced Documents

2.1 *ASTM Standards:*[2]

B659 Guide for Measuring Thickness of Metallic and Inorganic Coatings

E4 Practices for Force Calibration and Verification of Testing Machines

E18 Test Methods for Rockwell Hardness of Metallic Materials

E750 Practice for Characterizing Acoustic Emission Instrumentation

E1316 Terminology for Nondestructive Examinations

E1932 Guide for Acoustic Emission Examination of Small Parts

IEEE/ASTM SI 10 American National Standard for Metric Practice

2.2 *ASME Standard:*[3]

ASME B46.1 Surface Texture (Surface Roughness, Waviness, and Lay)

2.3 *CEN Standard:*[4]

CEN prEN 1071-3 Advanced Technical Ceramics—Methods of Test for Ceramic Coatings—Part 3: Determination of Adhesive and Other Mechanical Failure Modes by a Scratch Test

3. Terminology

3.1 *Definitions:*

3.1.1 *acoustic emission, n*—class of phenomenon in which elastic waves are generated by the rapid release of energy from localized sources within a material, or the transient waves so generated. **E1316**

3.1.2 *adhesive failure, n*—detachment and separation of a coating from the substrate with cracking and debonding at the coating-substrate interface.

3.1.3 *cohesive failure, n*—material damage and cracking in the coating or in the substrate, separate and distinct from detachment and adhesive debonding at the coating-substrate interface.

3.1.4 *critical scratch load (L_{CN}), n*—applied normal force at which a specific, well-defined, recognizable damage/failure event occurs or is observed in the scratch test of a specific coating on a specific substrate.

3.1.4.1 *Discussion*—The subscript N is used to identify progressive failure events. For example, L_{C1} is used to identify the first failure in the coating-substrate sample, and L_{C2} is used to identify the second failure in the coating-substrate sample. Multiple subscripts can be used for progressive levels of

[2] For referenced ASTM standards, visit the ASTM website, www.astm.org, or contact ASTM Customer Service at service@astm.org. For *Annual Book of ASTM Standards* volume information, refer to the standard's Document Summary page on the ASTM website.

[3] Available from American Society of Mechanical Engineers (ASME), ASME International Headquarters, Three Park Ave., New York, NY 10016-5990, www.asme.org.

[4] Available from European Committee for Standardization (CEN), 36 rue de Stassart, B–1050 Brussels, www.cenorm.be.

AVA Documents
Document Sharing Hub

Full document details: ASTM C1624-22

distinct damage, such as cohesive failure, adhesive failure, spalling, etc., in a specific coating-substrate system.

3.1.5 *fundamental adhesion, n*—summation of all interfacial intermolecular interactions between a film or coating and its substrate.

3.1.6 *normal force (L_N), n*—in a scratch test, the force exerted by the stylus, perpendicular to the test surface of the test specimen.

3.1.7 *practical adhesion, n*—force or work required to remove or detach a film or coating from its substrate irrespective of the locus of failure.

3.1.7.1 *Discussion*—"Practical adhesion" is a test concept which uses various engineering coating adhesion test methods to obtain a quantitative, reproducible adhesion measurement which can be related to the functional performance of the coating. The practical adhesion is an extrinsic property which depends on the complex interaction of coating-substrate properties and characteristics with the specific test parameters.

3.1.8 *stylus drag coefficient, n*—in scratch testing, the dimensionless ratio of the tangential force to the normal force applied to the stylus at a specific point in the scratch test.

3.1.8.1 *Discussion*—The term stylus drag coefficient is preferred to the more common term scratch coefficient of friction (SCF). The tangential force is primarily a measure of the perpendicular force required to plow the indenter through the coating, rather than to slide it on the surface (sliding friction is a relatively minor contribution to the measured tangential force unless penetration is very small and surface properties dominate). Thus the term friction coefficient is not appropriate for these stylus scratch tests. The SCF term is too easily misunderstood or misused as a measurement of sliding friction.

3.1.9 *tangential force (L_T), n*—force that opposes the relative motion between a moving stylus and the surface that is being scratched by the stylus and which is perpendicular to the normal force exerted by the stylus (also called the friction force, drag force, or the scratching force).

4. Summary of Test Method

4.1 This test consists of producing and assessing controlled damage in a hard ceramic coating by single point scratch action (see Fig. 1). The scratch is developed on a coated test specimen by drawing a diamond stylus of defined geometry and tip size (Rockwell C, 200 µm radius) across the flat surface of the specimen at a constant speed and a controlled and measured normal force (constant or progressively increasing). With increasing applied normal force, the stylus produces progressive mechanical damage in the coating and the substrate through the complex combination of elastic/plastic indentation stresses, frictional forces, and residual internal stresses in the coating-substrate system (Fig. 2).

4.2 The specific levels and types of progressive damage in the scratch track are assessed and associated with the applied normal stylus forces. The normal force which produces a specific, defined, reproducible type/level of damage is defined as a critical scratch load (L_C). For a given coating-substrate system, one or more different critical scratch loads (L_{CN}) can be defined for progressive levels of defined coating damage.

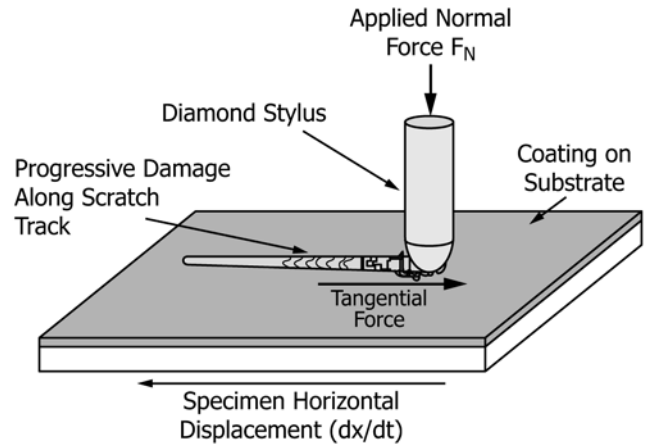

FIG. 1 Test Method Schematic

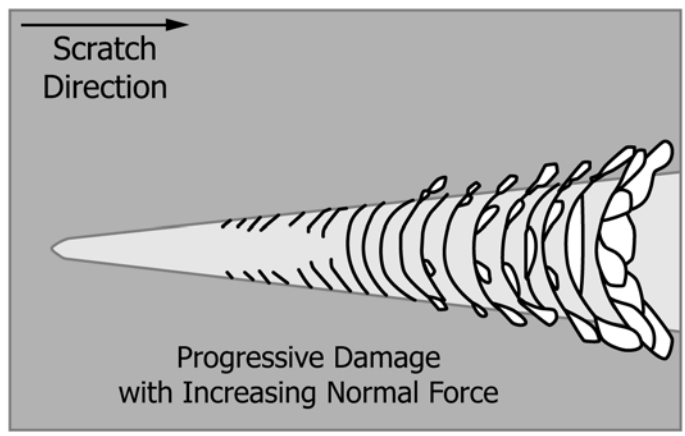

FIG. 2 Schematic Example of Progressive Damage in Scratch Track in a Progressive Load Scratch Test

4.3 Coating damage is assessed by optical microscopy (standard microscope or with white light interferometry or confocal microscopy) or scanning electron microscopy, or combined techniques, during or after the scratch test is done. The tangential force and acoustic emission signals can also be measured and recorded during the scratch test process and used as supplementary test data to identify different coating damage levels. In commercial instruments, computerized electronic systems are commonly used to apply, control, measure, and record the force signals and acoustic emission signals and to control the stylus-specimen movement.

4.4 The two primary modes of scratch adhesion testing are constant load and progressive load.

4.4.1 In constant load (CL) scratch testing, the normal force on the stylus is maintained at a constant level as the stylus moves in relation to the test specimen surface. Sequential scratch tests are done at increasing force increments to determine the critical scratch load for a given damage level.

NOTE 1—Test systems may have either a movable stage or a movable stylus with the alternate component in a fixed position.

4.4.2 In progressive load (PL) scratch tests, the applied stylus force is linearly increased from zero (or a minimum

AVA Documents
Document Sharing Hub

Full document details: ASTM C1624-22

defined load) to a defined maximum force as the stylus moves in relation to the test specimen surface.

4.5 The critical scratch loads at which a defined coating failure event occurs depend on a complex interaction of coating-substrate properties and test parameters/conditions. It is the purpose of this test standard to: (*1*) describe and define the test equipment and procedures and the major and minor coating-substrate properties which have to be controlled, measured, and understood to produce reliable, comparable coating adhesion test data, and (*2*) define a report format that will provide complete and accurate test data.

5. Significance and Use

5.1 This test is intended to assess the mechanical integrity, failure modes, and practical adhesion strength of a specific hard ceramic coating on a given metal or ceramic substrate. The test method does not measure the fundamental "adhesion strength" of the bond between the coating and the substrate. Rather, the test method gives a quantitative engineering measurement of the practical (extrinsic) adhesion strength and damage resistance of the coating-substrate system as a function of applied normal force. The adhesion strength and damage modes depend on the complex interaction of the coating-substrate properties (hardness, fracture strength, modulus of elasticity, damage mechanisms, microstructure, flaw population, surface roughness, and so forth) and the test parameters (stylus properties and geometry, loading rate, displacement rate, and so forth).

5.2 The test method as described herein is not appropriate for polymer coatings, ductile metal coatings, very thin (<0.1 µm) ceramic coatings, or very thick (>30 µm) ceramic coatings.

NOTE 2—Under narrow circumstances, the test may be used for ceramic coatings on polymer substrates with due consideration of the differences in elastic modulus, ductility, and strength between the two types of materials. Commonly, the low comparative modulus of the polymer substrate means that the ceramic coating will generally tend to fail in bending (through-thickness adhesive failure) before cohesive failure in the coating itself.

5.3 The quantitative coating adhesion scratch test is a simple, practical, and rapid test. However, reliable and reproducible test results require careful control of the test system configuration and testing parameters, detailed analysis of the coating damage features, and appropriate characterization of the properties and morphology of the coating and the substrate of the test specimens.

5.4 The coating adhesion test has direct application across the full range of coating development, engineering, and production efforts. Measurements of the damage mechanisms in a coating as a function of applied normal forces are useful to understand material-process-property relations; quantify and qualify the mechanical response of coating-substrate systems; assess coating durability; measure production quality; and support failure analysis.

5.5 This test method is applicable to a wide range of hard ceramic coating compositions (carbides, nitrides, oxides, diamond, and diamond-like carbon) applied by physical vapor deposition, chemical vapor deposition, and direct oxidation methods to metal and ceramic substrates.

5.6 Ceramic coatings can be crystalline or amorphous, but commonly have high relative density with limited porosity (<5 %). Porous coatings can be tested, but the effects of porosity on the damage mechanisms in the coating must be carefully considered.

5.7 The test method, as defined with the 200 µm radius Rockwell diamond stylus, is commonly used for ceramic coating thicknesses in the range of 0.10 to 30 µm. Thinner coatings may require a smaller diameter stylus and lower normal forces for reliable results. Thicker coatings may require larger diameter stylus and higher normal forces. Any variations in stylus size and geometry and designated normal force ranges shall be reported.

5.8 Specimens commonly have a flat planar surface for testing, but cylinder geometries can also be tested if they are properly fixtured and aligned and the scratch direction is along the long axis of the specimen. The physical size of the test specimen is determined primarily by the capabilities and limits of the test equipment stage and fixturing.

5.9 The test is commonly conducted under unlubricated conditions and at room temperature. However, it is feasible and possible to modify the test equipment and test conditions to conduct the test with lubrication or at elevated temperatures.

5.10 Coated specimens can be tested *after* high temperature, oxidative, or corrosive exposure to assess the retained properties and durability (short-term and long-term) of the coating. Any specimen conditioning or environmental exposure shall be fully documented in the test report, describing in detail the exposure conditions (temperature, atmosphere, pressures, chemistry, humidity, and so forth), the length of time, and resulting changes in coating morphology, composition, and microstructure.

6. Test Methodology and Experimental Control

6.1 *Test Overview:*

6.1.1 Coating adhesion is a challenging property to quantify, because the material response to a scratch force is "not a basic property but a response of a system to an applied test condition" (from Blau's *Lab Handbook of Scratch Testing*). But quantified data are still needed, and the instrumented single point scratch test is the most widely used test for determining quantitative practical adhesion of coatings.

6.1.2 The instrumented single point scratch adhesion test is simple and rapid when performed properly, but it requires a detailed understanding and careful measurement and control of a wide range of specimen characteristics and test parameters for the test to produce valid, repeatable, and reproducible data (Blau, Bull, Meneve, Mittal, Ichimura, etc.).

6.2 *Test Modes:*

6.2.1 The scratch adhesion test can be done in either of two test modes: constant load (CL) and progressive load (PL). In the CL mode, the normal force on the stylus is maintained at a constant level as the stylus moves at a constant displacement rate in relation to the test specimen surface. Multiple scratch tests are done at increasing force increments (and the same displacement rate) to determine the critical scratch load for a given damage level (Fig. 3). In progressive load (PL) scratch

AVA Documents
Document Sharing Hub

Full document details: ASTM C1624-22

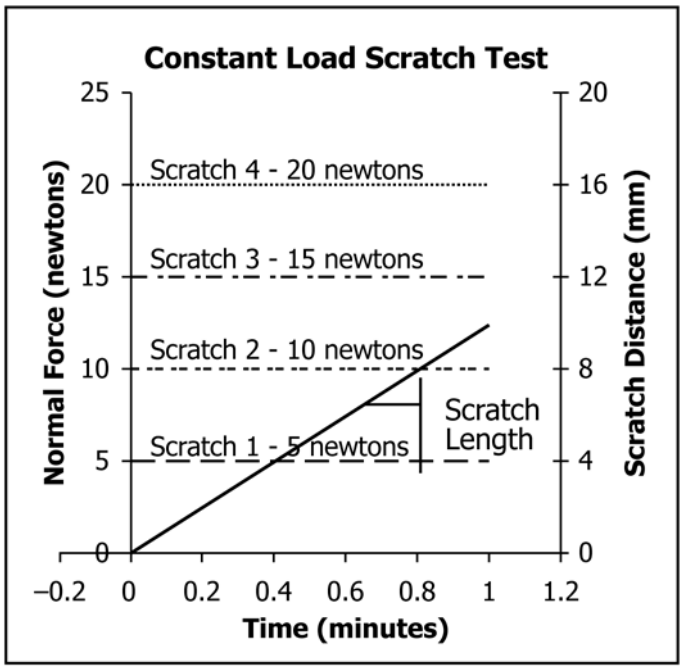

FIG. 3 Constant Load Graph

tests, the normal stylus force is linearly increased as the stylus moves at constant displacement rate with respect to the test specimen surface (Fig. 4). (Figs. 3 and 4 plot normal force (constant loads and progressive load) and scratch distance (stylus horizontal movement) against time.)

6.2.2 Table 1 shows relative advantages, disadvantages, and appropriate applications for the two test modes.

6.2.3 The user should choose the test mode which best meets the requirements for data completeness and confidence, specimen characteristics, material supply, and available time.

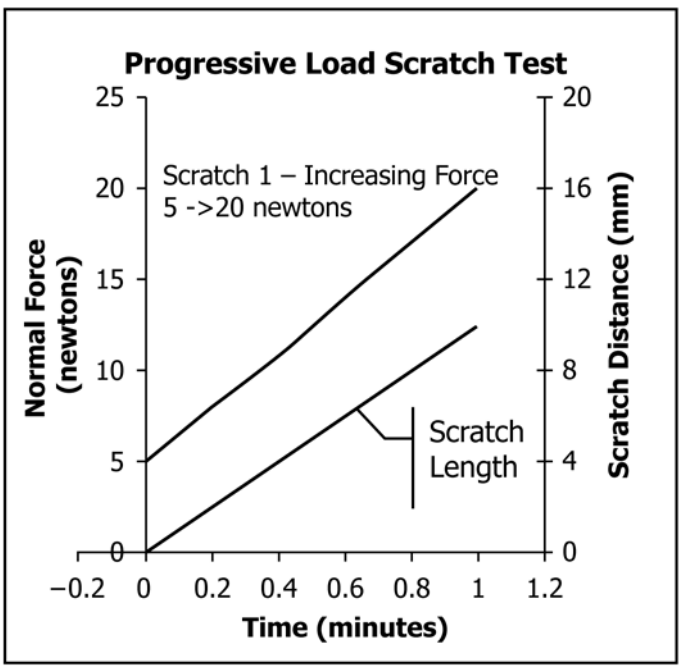

FIG. 4 Progressive Load Graph

In some cases, both test modes may be used for more complete assessment of the coating properties.

6.3 *Primary and Supplemental Measurements:*

6.3.1 *Normal Force and Optical Analysis:*

6.3.1.1 The primary experimental measurements in the scratch adhesion test are the applied normal stylus force and the optical identification/analysis of the damage features in the scratch track. The applied normal force (under constant load or progressive load test modes) is independently controlled and measured during stylus movement. The specific levels and types of progressive damage in the scratch track are optically assessed and directly correlated with the applied normal forces. The force level which produces a specific, defined, reproducible type/level of damage is defined as a critical scratch load (L_C). For a given coating-substrate system, several different critical scratch loads (L_{CN}) can be defined for progressive levels of coating damage (see Fig. 2).

6.3.1.2 Two other experimental measurements are also used as dependent variables in scratch adhesion tests: tangential force and acoustic emission analysis. They can serve as supplemental indicators of coating damage events.

6.3.2 *Tangential Force:*

6.3.2.1 The tangential force on the stylus is the force that opposes the relative motion between a moving stylus and the surface that is being scratched by the stylus and which is perpendicular to the normal force exerted by the stylus (see Fig. 1). That force (L_T) is an indicator of how the stylus and the specimen are interacting through in-plane forces developed by the applied normal force, indenter penetration, and scratch path features. Tangential force generally increases with increasing normal force. (The ratio of tangential force to normal force is the stylus drag coefficient and serves to normalize the tangential force against the applied normal force.)

6.3.2.2 In scratch testing, the tangential force may change in amplitude and shift into a stick-slip character (with more frequent and higher amplitude signal spikes) as different types of damage events occur in the scratch track. The tangential force data are plotted against the applied normal force (Fig. 5). The tangential force may also change through tip damage, from contamination (grease, debris, and so forth) between the stylus and the coating, or from changes in surface roughness along the scratch track.

6.3.2.3 Calculating the stylus drag coefficient for different normal stylus force levels permits the direct comparison of tangential force data done at different normal force levels. Stylus drag coefficient data can be graphed versus time, distance, and normal force and analyzed for the same type of signal variations—stepwise changes in average signal value and significant increases in the frequency and amplitude of signal spikes.

6.3.2.4 Distinct changes in tangential forces and stylus drag coefficient are indications of changes in stylus drag and stress or damage events in the scratch test. However, these changes cannot be associated *a priori* with specific coating damage-failure events without optical analysis to correlate the damage features with the changes in tangential force signals and calculated stylus drag coefficients.

6.3.3 *Acoustic Emission:*

Documents
Document Sharing Hub

Full document details: ASTM C1624-22

TABLE 1 Comparison of Constant Load and Progressive Load Test Modes

	Constant Load (CL) for Each Scratch	Progressive Load (PL) for One Scratch
Advantages	Better discrimination of different damage levels for each incremental loading level. Greater statistical confidence in damage events for a given loading level. Constant load discriminates for coating non-uniformity along the scratch path.	More rapid testing and better specimen utilization, with a single scratch covering a full load range. Progressive force application covers the full range of force without gaps.
Disadvantages	Multiple increment testing requires more specimen area and test time. Incremental loads can miss damage events at intermediate load levels.	Two experimental variables (load and location) changing at the same time. Limited statistical analysis of scratch damage features.
Application	Detailed load specific assessment of coatings (for research, process development, and durability studies) Single value tests are suitable for ″pass-fail″ QA and for assessing coating uniformity.	Screening assessment and QA tests of coatings (for research, process development, and durability studies)

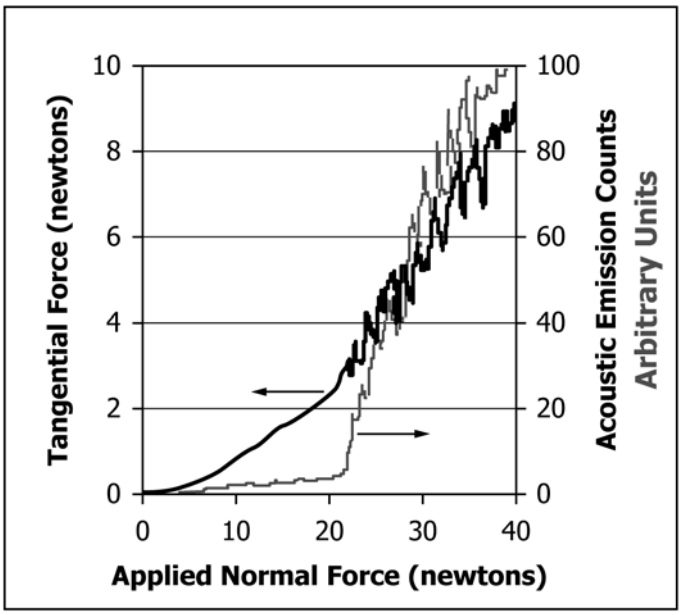

FIG. 5 Tangential Force and Acoustic Emission versus Applied Normal Force in Progressive Load Test

6.3.3.1 Brittle damage events (cracking, delamination, chipping, spalling, buckling, and so forth) can produce high-frequency elastic waves in the coating and substrate which can be detected by acoustic emission (AE) systems. As the applied normal force increases in the scratch test, coating damage events occur with increasing frequency and severity and the resulting elastic waves are detected, measured, and recorded by the acoustic emission equipment. The AE data record for each scratch test is analyzed for significant changes in AE signal characteristics (peak amplitude, frequency, event counts, rise time, signal duration, and energy intensity) that correlate with a given normal stylus force. AE data can be plotted against time, horizontal displacement distance, or normal stylus force (Fig. 5).

6.3.3.2 It should be noted that changes in acoustic emission events at given normal force levels cannot discriminate *a priori* between the different damage events and coating failure modes. Acoustic emission event/signal identification with specific coating failure events requires extensive testing of a given coating system and correlation with the optical analysis of the damage events for that specific coating system.

6.4 *Critical Scratch Load Damage Criteria and Scratch Atlas:*

6.4.1 A primary requirement in using the scratch adhesion test is to clearly identify and categorize the specific coating damage features which are used to define the critical scratch load(s). Since different coating systems can fail with different types of damage, there is no universal set of "critical scratch damage features" that can be applied to all types of coatings.

6.4.2 Appendix X1 gives an overview of typical types of ceramic coating damage mechanisms and a scratch atlas which lists a set of descriptive terms for different types of scratch damage supported by sketches and micrographs. The scratch atlas is not totally comprehensive, but it provides a baseline and framework for users to assess and describe crack damage with a set of generally accepted and understood terms.

6.4.3 Each test user will select the particular levels and classes of coating damage features for a specific coating-substrate system that best meets the coating performance requirements and testing needs. For example, the simplest critical scratch load criteria may be a single level (L_{C1}) at which the first cohesive failure occurs in the coating. A two-level critical scratch load (L_{C1} and L_{C2}) might be defined for cohesive cracking/failure (L_{C1}) in the coating and for subsequent adhesive failure/spalling (L_{C2}) between the coating and the substrate at a higher applied normal force. If necessary, for complete damage mechanism mapping (for research, failure analysis, or durability assessment), multiple (>2 levels) critical scratch loads may be defined to identify each distinctive type of damage feature.

6.4.4 It is critically important to the validity and reproducibility of the scratch test for a given coating-substrate system that the damage events for a given critical scratch load be well defined and described in the test report. This is best done with micrographs and sketches to show the typical damage features of interest. Alternatively, the damage features may be verbally described in the report. Valid comparisons between different test specimens require that they have the same failure/damage mechanisms, which can only be confirmed by optical analysis.

6.5 *Experimental Factors and Variables:*

AVA Documents
Document Sharing Hub

Full document details: ASTM C1624-22

6.5.1 Appendix X2 provides an overview of the full range of experimental and material variables which have varying degrees of impact in a scratch adhesion test. The different factors can be categorized into six sets of variables: coating variables, substrate variables, interface variables, equipment and procedure variables, specimen variables, and environment variables.

6.5.2 The required depth and detail of specimen characterization and test parameter control will depend on the purpose, scope, and level of confidence and detail required by the user. The experimenter needs to understand and carefully consider how each of these variables can impact a particular test and to what degree each needs to be controlled and measured. This is necessary for the scratch adhesion test is to be used with an acceptable degree of confidence, accuracy, and reliability.

6.5.3 Table 2 lists the test parameters and specimen characteristics that have the *top* priority for control and measurement to ensure acceptable scratch adhesion test results.

6.5.4 Additional test parameters and specimen characteristics may need to be measured and controlled for full analysis and understanding; but, at a minimum, the characteristics and parameters in Table 2 shall be well controlled and documented to ensure valid and reproducible scratch adhesion test results.

7. Interferences

7.1 The repeatability, reproducibility, and precision in the scratch adhesion test requires that variations in test parameters and specimen characteristics be minimized. As described in Appendix X2, there are many variables that *may* have an impact on the test data and need to be considered to varying degrees. However, the following material and test parameters are the primary source of test interference and need to be understood and controlled.

7.2 *Material and Specimen Related:*

7.2.1 Variations (in individual specimens and between specimens) in the coating thickness and in the surface roughness of the coating are a major source of variability in the critical scratch load values.

NOTE 3—Deposition techniques and residual stresses have also shown variability in the critical load values.

7.2.2 Major variations (in specimens and between specimens) in the microstructure, morphology, mechanical properties, and flaw population of the coating may change the damage mechanisms and modes of failure and modify the critical scratch load values.

TABLE 2 Top Priority for Control and Measurement of Specimen Characteristics and Test Parameters

Factor	Details
Diamond Stylus	Verified geometry, size, condition (damage free and clean)
Force and Displacement Control	Accurate calibration, precise and accurate control, measurement, and data recording
Damage Assessment	Optical analysis with well-defined damage criteria and complete documentation with photos/sketches
Coating Characterization	Detailed information (by analysis or from coating supplier) on composition, thickness, pedigree, and surface roughness

7.2.3 Contamination and debris on the surface of the coating may interfere with the stylus and increase data variability.

7.3 *Test Method Related:*

7.3.1 Test data are not comparable between specimens and specimen sets unless the scratch adhesion tests are conducted under directly comparable conditions using:

7.3.1.1 Identical styluses (composition, geometry, size, and orientation), and

7.3.1.2 Identical force application rates and horizontal displacement rates.

7.3.2 Stylus damage and contamination will modify the stylus-surface interaction and increase data variability.

7.3.3 The definitions and documentation of the damage criteria for each critical scratch load level for a given coating-substrate shall be clearly defined in complete detail to minimize subjective analysis and improve reproducibility between operators and laboratories.

8. Apparatus

8.1 *General Description:*

8.1.1 The quantitative scratch adhesion test system commonly consists of six equipment subsystems: (*1*) stylus and stylus mounting, (*2*) mechanical stage and displacement control, (*3*) test frame and force application system, (*4*) force sensors, (*5*) optical measurement, and (*6*) data acquisition/recording. The test system may also include additional measurement systems, such as acoustic emission and displacement sensors (Fig. 6).

8.1.2 Commercial scratch adhesion test systems are widely available and extensively used. They commonly include computer feedback control of normal force and horizontal displacement, computer data acquisition, and video microscope recording systems.

8.2 *Stylus and Stylus Mounting:*

8.2.1 The stylus shall be a diamond indenter that meets the specifications for a Rockwell sphericonical diamond indenter, as described in 13.1.2.1 of Test Methods E18 and commonly called a Rockwell C diamond indenter. The Rockwell diamond indenter has an apex angle of 120° and terminates in a hemispherical tip with a mean radius of 200 µm (400 µm diameter). Full specifications for the Rockwell C diamond indenter from Test Methods E18 are included in Annex A1. The use of the Rockwell C diamond indenter is specified for this test to ensure comparability and reproducibility of test results within and between laboratories.

NOTE 4—It is recommended that the Rockwell C diamond stylus geometry be definitively checked, verified (SEM, interferometry, profilometry, interference microscopy, and so forth), and documented against specifications by the supplier or by the end user. Significant variations can occur between nominally identical styluses and will have a significant effect on test results.

NOTE 5—If a diamond stylus with smaller or larger tip radius is required and used (for thinner or thicker coatings), the test report shall indicate that a modified version of the standard was used, and the size of the tip radius shall be reported. Scratch test data produced with different stylus geometries, tip radii, or compositions are not directly comparable.

8.2.2 The stylus mounting system shall be designed and constructed to rigidly and securely hold the diamond stylus

AVA Documents
Document Sharing Hub

Full document details: ASTM C1624-22

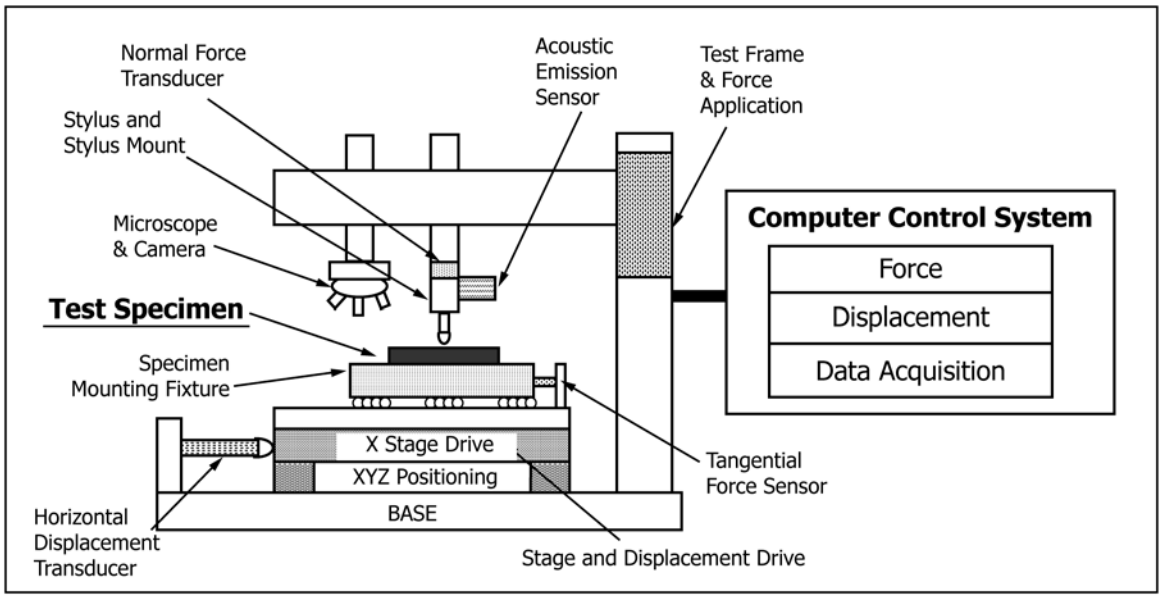

FIG. 6 Scratch Adhesion Test System Schematic

with a minimum of vertical and horizontal compliance or backlash, given the applied normal and tangential forces.

8.2.3 The diamond stylus shall be secured in a consistent orientation in the mounting holder, either by index marks or alignment flats. This is necessary to eliminate variation between tests caused by spatial variations in the condition, orientation, or shape of the diamond stylus, or a combination thereof, found either in the as-received condition or after accumulated wear from testing.

8.2.4 The diamond stylus shall be microscopically inspected for tip wear and damage and contamination at the beginning of each test series or after ten scratch tests. See 11.4 for a detailed discussion and description of the stylus inspection procedure.

8.3 *Mechanical Stage and Displacement Control System:*

8.3.1 The mechanical stage serves to rigidly secure and accurately align and position the test specimen. Relative movement between the diamond stylus and the specimen can be produced by either of two methods: (*1*) movement of the mechanical stage with respect to a fixed stylus, or (*2*) movement of the stylus with respect to a fixed stage.

8.3.2 The mounting stage fixture shall be designed and constructed of hard metal (tool steel, stainless steel) to be sufficiently rigid to withstand the normal and lateral forces associated with the scratching action without undue elastic or plastic deflection. The fixture must secure the test specimen so that there is no lateral movement, rocking, or backlash of the specimen during the scratch test. The fixture shall have alignment mechanisms to ensure that the test specimen surface plane (or long axis/test direction for cylinder specimens) can be aligned orthogonal and level with respect to the loading direction of the stylus along the length of a given scratch track (see Section 10 and Annex A2 on stage alignment).

8.3.3 The stage should have two-axis (*X* and *Y*) manual horizontal adjustment (to position the specimen for scratch testing). Horizontal accuracy (straight-line position) should be 10 µm or better in both the *X* and *Y* directions. The test specimen stage must have vertical axis (*Z*) adjustment (manual or motorized) to raise and lower the specimen (or the stylus) into the test position.

8.3.4 The scratch adhesion test is commonly conducted under unlubricated conditions and at room temperature. However, it is feasible and possible to modify the test equipment and test conditions to conduct the test with lubrication or at cryogenic or elevated temperatures. For elevated temperature (>100 °C) testing, test equipment will have to be specially modified to develop and maintain specimen temperature, minimize oxidation and thermal degradation of the test specimens and test equipment, and maintain precise control and accurate measurement of the experimental parameters. Any modifications of the test system or test procedure shall be fully documented in the test report.

NOTE 6—Some commercial test systems now offer temperature-controlled stages for testing specimens across a range of cryogenic and elevated temperatures.

8.3.5 The movement control system shall produce straight-line horizontal movement between the stylus and the specimen at a constant, controlled, and repeatable speed. This controlled horizontal displacement is most easily produced with an electromechanical stage. The range of translation/displacement (scratch length) shall be at least 10 mm. Translational accuracy and repeatability shall be 0.5 % of the minimum displacement range or 50 µm, whichever is smaller. The system shall be capable of a specimen displacement speed of 10 mm/min with an accuracy of ±0.1 mm/min (higher or lower translation speeds, or both, may be necessary for modified tests).

NOTE 7—Current test systems (commercial and in-house built) commonly have a range of displacement motion of 20 to 150 mm and a range of displacement speeds of 10 to 100 mm/min. It is also common in commercial systems for the specimen positioning and stage movement to be feedback controlled by displacement sensors and computer-controlled translation motors.

AVA Documents
Document Sharing Hub

Full document details: ASTM C1624-22

8.3.6 The movement control system shall be calibrated for accuracy and precision in accordance with Annex A2.

8.3.7 The test system may also be instrumented with an independent horizontal displacement sensor to independently measure the specimen horizontal translation as a function of time. The horizontal displacement sensor shall have a resolution and accuracy of 10 µm or 1 % (or better) of the maximum measured translation, whichever is smaller. Current commercial systems commonly have horizontal positioning precisions of 1 µm or better (see Section 10 and Annex A2 for calibration).

8.4 *Test Frame and Force Application System:*

8.4.1 The test frame system (specimen stage, stylus mounting system, and load frame) shall be sufficiently rigid so that the vertical compliance (µm/N) of the system does not significantly affect the application of force to the specimen or the determination of stylus indent depth. A recommended system compliance value is 5 % or less of the compliance of the test specimen.

8.4.2 The force application system shall be designed to apply the desired normal force to the stylus in a controlled and repeatable manner across the full range of stylus vertical and horizontal displacement. The maximum force required will depend on the properties of the specific coating-substrate system being tested, but a force range of 0 to 150 N will be sufficient for most hard coatings tested with the Rockwell C indenter. Force control shall be precise and repeatable to an accuracy of at least 0.5 N or better. Depending on the type of test (constant load or progressive load), the applied force is either held constant or linearly increased during the specimen/stylus translation. For progressive loading, the minimum force application rate shall be 5 N/min.

NOTE 8—Current commercial test systems commonly use a spring-loaded cantilever beam load train with a servo motor compressing the spring to control the force. Such systems commonly have a maximum force of 200 N and a range of force application speeds of 0 to 500 N/min. It is also increasingly common for normal force application to be programmed, controlled, and recorded by a computer-controlled system with active feedback and control based on force sensors, force actuators, and electric motors. Specimen and stage translation is also controlled through the same computer system with displacement sensors and electronic motors.

8.5 *Force and Displacement Sensors:*

8.5.1 The unit of force measurement shall be the newton. The test system shall be instrumented with a force sensor to measure and record the normal force on the stylus as a function of time through the full range of applied force with a resolution and accuracy of at least 0.5 % or better of the maximum expected normal force for the coating specimens of interest.

NOTE 9—Current test systems (commercial and in-house built) commonly have force sensors with accuracies of 50 mN or better.

8.5.2 The normal force sensor shall be calibrated in accordance with Section 10 and Annex A2.

8.5.3 The test system may also be instrumented with a tangential force sensor on the stylus or the stage to measure and record the tangential/drag force on the stylus or specimen as a function of time, normal force, or displacement. If so equipped, the tangential force sensor shall have a resolution and accuracy of 1 % or better of the maximum expected tangential force. The sensor shall be calibrated in accordance with Section 10 and Annex A2. If the tangential force is measured, the stylus drag coefficient (tangential force/normal force) can also be calculated.

8.5.4 The unit of displacement measurement shall be the millimeter. It is recommended that the test system be instrumented with an independent horizontal displacement sensor to record the displacement of the specimen relative to the stylus with a resolution and accuracy of 50 µm or better. The horizontal displacement sensor shall be calibrated in accordance with Section 10 and Annex A2.

8.5.5 The test system may also be instrumented with a vertical displacement sensor to measure the vertical movement of the stylus as a function of time or normal force. If the specimen is flat and level, the vertical stylus movement will be directly related to stylus penetration into the coating. Stylus penetration may be related to different damage levels. The vertical displacement sensor shall have a resolution and accuracy of 1 % or better of the maximum measured displacement. Current commercial systems commonly have a vertical displacement range of 1 mm and a precision of 10 nm or better. The vertical displacement sensor shall be calibrated in a similar manner as the horizontal displacement sensor.

8.6 *Optical Analysis and Measurement:*

8.6.1 The scratch test method requires a means of optically analyzing the condition of the coating and the damage events along the scratch track. This is commonly done with a reflected light optical microscope having an objective lens with magnification of 5 to 20× and total magnification of 100 to 500×. The actual magnification required will depend on the scale and morphology of the damage features of interest in the scratch track. The optical system shall have sufficient resolution and depth of focus to clearly observe and identify crack damage features on the scale of 5 µm and greater.

NOTE 10—Microscopic examination of the scratch track is mandatory for determining critical scratch load values because it is the only reliable method of associating a specific damage/failure event with a measured normal force.

NOTE 11—Special optical microscope techniques (oblique illumination, polarized light, differential interference contrast, dark field illumination, in-focus/out-of-focus, white light interferometry, confocal, and so forth) may be of value in identifying and evaluating smaller, more detailed damage features.

8.6.2 The optical system must be capable of accurately measuring the position of the defined damage along the length of the scratch track in the progressive load test mode. This is most commonly done with a traveling microscope, instrumented so that the distance along the scratch track can be measured to within ±50 µm or better. This optical evaluation is commonly done after the scratch test with a microscope system that is an integral in-line component of the test system. It can also be done on a stand-alone microscope system.

NOTE 12—Many current commercial scratch test systems are instrumented with in-line optical microscopes. The position of the microscope is calibrated with respect to the stylus, so that horizontal position and damage events can be directly correlated with the associated normal force at those event locations. With the in-line optics, the specimen does not have to be removed from the instrument for [illegible]

AVA Documents
Document Sharing Hub

Full document details: ASTM C1624-22