Designation: C321 – 00 (Reapproved 2012)

Standard Test Method for Bond Strength of Chemical-Resistant Mortars[1]

This standard is issued under the fixed designation C321; the number immediately following the designation indicates the year of original adoption or, in the case of revision, the year of last revision. A number in parentheses indicates the year of last reapproval. A superscript epsilon (ε) indicates an editorial change since the last revision or reapproval.

This standard has been approved for use by agencies of the U.S. Department of Defense.

1. Scope

1.1 This test method covers the determination of the bond strength between chemical-resistant mortars and chemical-resistant brick.

1.2 The values stated in inch-pound units are to be regarded as standard. The values given in parentheses are mathematical conversions to SI units that are provided for information only and are not considered standard.

1.3 *This standard does not purport to address all of the safety problems, if any, associated with its use. It is the responsibility of the user of this standard to establish appropriate safety and health practices and determine the applicability of regulatory limitations prior to use.*

2. Referenced Documents

2.1 *ASTM Standards:*[2]

C279 Specification for Chemical-Resistant Masonry Units
C287 Specification for Chemical-Resistant Sulfur Mortar
C904 Terminology Relating to Chemical-Resistant Nonmetallic Materials
E4 Practices for Force Verification of Testing Machines

3. Terminology

3.1 *Definitions*—For definitions of terms used in this test method, see Terminology C904.

4. Significance and Use

4.1 This test offers a method of determining the bond strength between chemical-resistant mortars and chemical-resistant brick. The results obtained by this test method should be used as a guide in, but not as the sole basis for, selection of a chemical-resistant material for a particular application. If failure is within the brick, then the result reported shall be stated as a minimum bond strength and it shall be noted that the brick broke.

5. Apparatus

5.1 *Equipment,* capable of weighing materials or specimens to ±0.3 % accuracy.

5.2 *Equipment for Mixing Materials* , consisting of a container of suitable size, preferably made of corrosion-resistant metal, or a porcelain enameled pan, and a strong, sturdy spatula or trowel.

5.3 *Equipment for Melting Sulfur* , consisting of a container of suitable size, preferably made of corrosion-resistant metal, and a heater for melting the sulfur mortar. Also required is a laboratory mixer capable of operating at a speed sufficient to lift the aggregate but without beating air into the melt.

5.4 *Testing Machine,* of the universal type, in which the load is applied hydraulically, mechanically, or electromechanically at a constant but adjustable rate of crosshead movement. The machine shall conform to Practices E4.

5.5 *Guide for Marking Brick,* of the type shown in Fig. 1.

5.6 *Special Test Fixture,* consisting of two units of the type shown in Fig. 2.

5.7 *Apparatus for Preparation of Mortar Joint by Casting,* of the type shown in Fig. 3.

5.8 *Brick,* as defined in 1.1. See Specification C279.

6. Temperature

6.1 The standard temperature of the laboratory equipment and materials shall be 73 ± 4°F (23 ± 2°C).

7. Number of Specimens

7.1 A minimum of six crossed-brick test specimens shall be prepared.

8. Preparation of Crossed-Brick Test Specimens

8.1 With mortars designed for a trowel-type application, apply the mortar over the area on the brick that is marked for the joint. The amount of mortar applied shall be 25 to 50 % in excess of the required amount to ensure a full joint. Place one

[1] This test method is under the jurisdiction of ASTM Committee C03 on Chemical-Resistant Nonmetallic Materials and is the direct responsibility of Subcommittee C03.01 on Mortars and Carbon Brick.

Current edition approved Aug. 1, 2012. Published September 2012. Originally approved in 1954. Last previous edition approved in 2005 as C321 – 00 (2005). DOI: 10.1520/C0321-00R12.

[2] For referenced ASTM standards, visit the ASTM website, www.astm.org, or contact ASTM Customer Service at service@astm.org. For *Annual Book of ASTM Standards* volume information, refer to the standard's Document Summary page on the ASTM website.

Copyright © ASTM International, 100 Barr Harbor Drive, PO Box C700, West Conshohocken, PA 19428-2959. United States

Documents
Document Sharing Hub
Full document details: ASTM C321-00(2012)

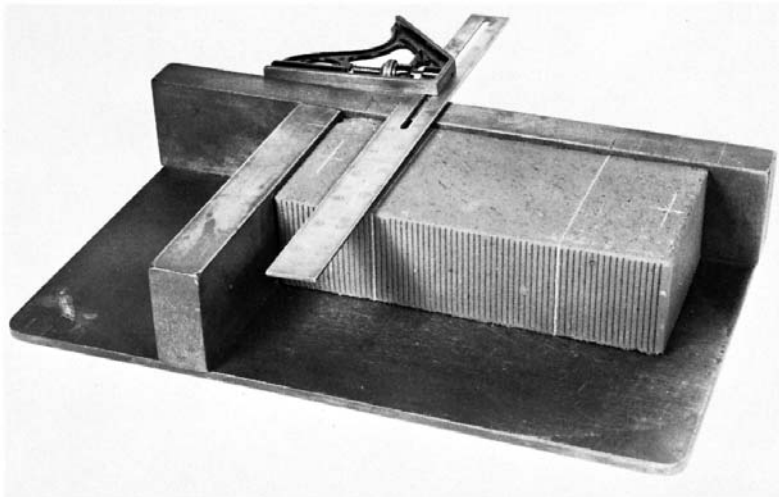

FIG. 1 Guide for Marking Brick

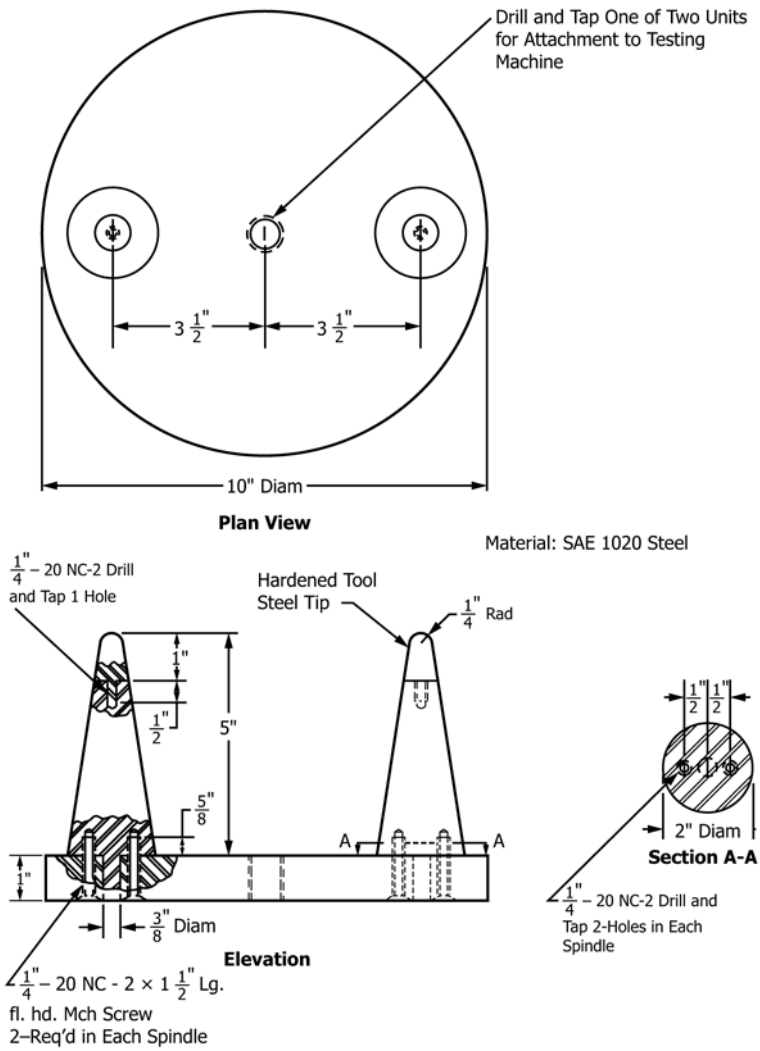

FIG. 2 Special Test Fixture

of the brick, mortared side up, on a flat level surface. Then place two blocks on each side of the joint area of the bottom brick. The height of the blocks must be uniform and is dependent on the thickness of the mortar joint desired and the

Documents
Document Sharing Hub
Full document details: ASTM C321-00(2012)