This international standard was developed in accordance with internationally recognized principles on standardization established in the Decision on Principles for the Development of International Standards, Guides and Recommendations issued by the World Trade Organization Technical Barriers to Trade (TBT) Committee.

Designation: D1043 – 16 (Reapproved 2024)

Standard Test Method for Stiffness Properties of Plastics as a Function of Temperature by Means of a Torsion Test[1]

This standard is issued under the fixed designation D1043; the number immediately following the designation indicates the year of original adoption or, in the case of revision, the year of last revision. A number in parentheses indicates the year of last reapproval. A superscript epsilon (ε) indicates an editorial change since the last revision or reapproval.

This standard has been approved for use by agencies of the U.S. Department of Defense.

1. Scope*

1.1 This test method covers the determination of the stiffness characteristics of plastics over a wide temperature range by direct measurement of the apparent modulus of rigidity.

1.2 The values stated in SI units are to be regarded as the standard. The values given in parentheses are for information only.

1.3 *This standard does not purport to address all of the safety concerns, if any, associated with its use. It is the responsibility of the user of this standard to establish appropriate safety, health, and environmental practices and determine the applicability of regulatory limitations prior to use.*

NOTE 1—This test method and ISO 458-1 and ISO 458-2 address the same subject matter, but differ in technical content.

1.4 *This international standard was developed in accordance with internationally recognized principles on standardization established in the Decision on Principles for the Development of International Standards, Guides and Recommendations issued by the World Trade Organization Technical Barriers to Trade (TBT) Committee.*

2. Referenced Documents

2.1 *ASTM Standards:*[2]

D618 Practice for Conditioning Plastics for Testing

D638 Test Method for Tensile Properties of Plastics

D747 Test Method for Apparent Bending Modulus of Plastics by Means of a Cantilever Beam (Withdrawn 2019)[3]

D883 Terminology Relating to Plastics

D1053 Test Methods for Rubber Property—Stiffening at Low Temperatures: Flexible Polymers and Coated Fabrics

D4000 Classification System for Specifying Plastic Materials

D5947 Test Methods for Physical Dimensions of Solid Plastics Specimens

E177 Practice for Use of the Terms Precision and Bias in ASTM Test Methods

2.2 *ISO Standards:*[4]

ISO 458-1 Plastics—Determination of Stiffness in Torsion of Flexible Materials, Part 1: General Method

ISO 458-2 Plastics—Determination of Stiffness in Torsion of Flexible Materials, Part 2: Application to Plasticized Compounds of Homopolymers and Copolymers of Vinyl Chloride

3. Terminology

3.1 *Definitions*—For definitions of the technical terms pertaining to plastics used in this test method, see Terminology D883.

4. Significance and Use

4.1 The property measured by this test is the apparent modulus of rigidity, *G*, sometimes called the apparent *shear* modulus of elasticity. It is important to note that this property is not the same as the modulus of elasticity, *E*, measured in tension, flexure, or compression. The relationship between these properties is shown in Annex A1.

4.2 The measured modulus of rigidity is termed "apparent" since it is the value obtained by measuring the angular deflection occurring when the specimen is subjected to an applied torque. Since it is possible that the specimen will be deflected beyond its elastic limit, the calculated value will not always represent the true modulus of rigidity within the elastic limit of the material. In addition, the value obtained by this test method will also be affected by the creep characteristics of the material, since the load application time is arbitrarily fixed. For many materials, it is possible that there is a specification that requires the use of this test method, but with some procedural

[1] This test method is under the jurisdiction of ASTM Committee D20 on Plastics and is the direct responsibility of Subcommittee D20.10 on Mechanical Properties.

Current edition approved Feb. 1, 2024. Published February 2024. Originally approved in 1949. Last previous edition approved in 2016 as D1043 - 16. DOI: 10.1520/D1043-16R24.

[2] For referenced ASTM standards, visit the ASTM website, www.astm.org, or contact ASTM Customer Service at service@astm.org. For *Annual Book of ASTM Standards* volume information, refer to the standard's Document Summary page on the ASTM website.

[3] The last approved version of this historical standard is referenced on www.astm.org.

[4] Available from International Organization for Standardization (ISO), ISO Central Secretariat, BIBC II, Chemin de Blandonnet 8, CP 401, 1214 Vernier, Geneva, Switzerland, http://www.iso.org.

*A Summary of Changes section appears at the end of this standard

Copyright © ASTM International, 100 Barr Harbor Drive, PO Box C700, West Conshohocken, PA 19428-2959. United States

Documents
Document Sharing Hub
Full document details: ASTM D1043-16(2024)

modifications that take precedence when adhering to the specification. Therefore, it is advisable to refer to that material specification before using this test method. Table 1 in Classification D4000 lists the current ASTM material standards.

4.3 This test method is useful for determining the relative changes in stiffness over a wide range of temperatures.

5. Apparatus

5.1 *Testing Machine*—A machine capable of exerting a torque sufficient to deflect a test specimen in the range of 5 to 100° of arc, depending on the stiffness of the specimen and its span. A schematic diagram of a suitable machine is shown in Fig. 1.

NOTE 2—Two machines of different torque capacities are being used: one covers the range of approximately 0.0113 to 0.113 N·m (0.1 to 1.0 in.·lbf) and the other of approximately 0.113 to 1.81 N·m (1.0 to 16 in.·lbf) or higher. Some machines also allow varying the span, which is especially important if shearing failures can occur (as in laminates at a span/width of 6).

NOTE 3—It is acceptable to vary the amount of torque to suit the stiffness of the test specimen, and it is necessary to have various weights available for this purpose. Determine the actual amount of torque being applied by any given combination of weights, torque wheel radii, and shaft bearings by calibration. The accuracy of the apparatus can be subject to change, and therefore periodic calibration is necessary to ensure reliable test results. Testing machine calibration procedures are given in Annex A2 and Annex A3.

NOTE 4—For operation at low temperatures the shaft of the machine must be provided with a heated collar next to the lower bearing to prevent the formation of ice.

5.2 *Temperature Control:*

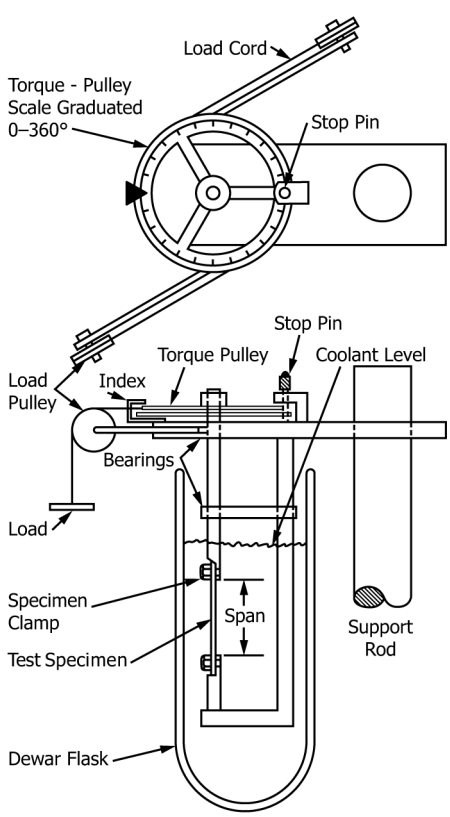

FIG. 1 Torsion Tester

5.2.1 *Flask*—A Dewar flask of suitable dimensions.

5.2.2 *Thermometer*—A thermometer having the necessary temperature range and having an accuracy of ±1°C or better. The bulb or sensing tip shall be located in proximity to the test specimen.

5.2.3 *Timer,* for controlling load application time.

5.2.4 *Heat-Transfer Medium*—For normal laboratory purposes, a substance that is liquid over the desired temperature range shall be used for the heat-transfer medium, provided it has been shown that the liquid does not soften or otherwise affect the test specimen.

NOTE 5—Among the liquids found useful are acetone, ethanol, butanol, methanol, normal hexane, silicone oil, and a mixture of methyl phosphate and water in the ratio of 87 to 13 by volume. For temperatures to −70°C (−94°F), a mixture of 50 parts ethanol, 30 parts ethylene glycol, and 20 parts water is potentially useful.

5.2.5 *Refrigeration*—Means shall be provided for cooling the heat-transfer medium. This cooling can be by means of a refrigeration cooling coil built into the instrument and immersed in the Dewar flask of heat transfer fluid or by means of a low temperature chamber in which Dewar flasks of heat transfer liquid are placed to pre-cool before starting the test.

NOTE 6—For time-efficient low-temperature use of the equipment, space for cooling enough containers of the heat-transfer medium for a day's work is desirable. Depending on the temperature ranges involved, mechanical refrigeration or a dry-ice chest, or both, will be advantageous.

5.2.6 *Heater*—A controlled electric immersion heater in the Dewar flask shall be used in conjunction with an agitator to vary the temperature.

5.3 *Micrometer*—A micrometer accurate to within ±0.0025 mm (±0.0001 in.) or better shall be used for measuring specimen thickness and width.

5.4 *Modifications to Testing Equipment*—The modifications described in Annex A4 will increase the accuracy and sensitivity of the testing equipment. The modifications are readily adaptable to several types of test equipment used for testing plastics. Some of the modifications are desirable, but not necessary, for obtaining meaningful data.

6. Test Specimens

6.1 *Geometry*—Test specimens shall be of the rectangular geometry shown in Fig. 2. Cut test specimens from compression-molded sheets, extruded sheet, or from parts of uniform thickness having flat parallel surfaces, or prepare them by injection molding. Care shall be taken to ensure that the test specimens are isotropic. Where the testing machine permits varying the span, use a span to width (*L/a*) ratio of 6 to 8. It is recommended that spans of 38 to 100 mm (1.5 to 4 in.) be used. These test specimens are acceptable for use for nonrigid materials on the low-range machine which has a span (*L*) of 38 mm (1.5 in.).

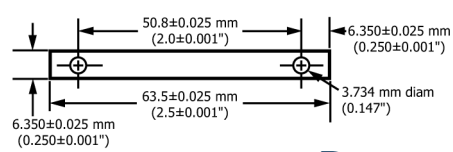

FIG. 2 Test Specimen

AVA Documents
Document Sharing Hub

Full document details: ASTM D1043-16(2024)

6.2 *Thickness*—The thickness of the specimen shall range between approximately 1 and 3 mm (0.040 and 0.125 in.). This range normally makes it possible to test materials of widely different stiffnesses.

6.3 Duplicate specimens of each material shall be tested. More replications are often needed, especially for nonhomogeneous materials. If the results from testing the first two specimens differ significantly, test a third specimen and discard the outlier (the value that varies the most from the other two).

7. Conditioning

7.1 *Conditioning*—Condition the test specimens in accordance with Procedure A of Practice D618 unless otherwise specified by contract or the relevant ASTM material specification. Temperature and humidity tolerances shall be in accordance with Section 7 of Practice D618 unless specified differently by contract or material specification.

7.2 *Test Conditions*—Conduct the tests at the same temperature and humidity used for conditioning with tolerances in accordance with Section 7 of Practice D618 unless otherwise specified by contract or the relevant ASTM material specification.

8. Procedure

8.1 Measure the width and thickness of the specimen to one significant digit.

8.2 Carefully mount the specimen in the apparatus. Adjust the clamps so that the specimen is not under compression or tension and is in complete contact with the clamp's internal surfaces.

8.3 Place the thermometer in position with its bulb or sensing tip in close proximity to the test specimen.

8.4 Fill the Dewar flask with the heat-transfer medium. It is acceptable to precool the heat-transfer medium to a temperature lower than the lowest desired test temperature.

8.5 Place the flask in position on the instrument, and start the agitator.

8.6 By intermittent use of the immersion heater, bring the bath to the desired test temperature. This heating can be controlled by an automatic temperature controller, if the instrument is so equipped.

8.7 Condition the specimen at the test temperature for a minimum of 3 min.

8.8 Release the torque pulley. After 5 s note the angular deflection of the pulley and return the torque pulley to its initial position. If the reading thus obtained does not fall within the range from 5 to 100° of arc (10 to 100° for nonrigid materials), vary the applied torque in such a way as to produce such a reading. If it is necessary to vary the applied torque, wait another 3 min and repeat the procedure at the same temperature.

NOTE 7—In order to obtain measured values of apparent modulus of rigidity, *G*, that are comparable to the true value of *G*, it is desirable that measurements be made within the elastic limit of the material being tested. Therefore, torques shall be chosen that will cause deflections that are as small as practical to measure accurately on the machine being used. It is often desirable to reduce the torque slightly before taking successive readings, particularly in the temperature range where the material is rapidly decreasing in rigidity.

NOTE 8—Better reproducibility is obtained if torques are chosen such that the deflection obtained at a given temperature is similar to or greater than that obtained at the previous lower temperature.

8.9 After each suitable reading is obtained, repeat the steps indicated in 8.6 – 8.8 for the next desired temperature. If desired, it is acceptable to lower the torque prior to each reading (Note 7 and Note 8).

9. Calculation

9.1 Calculate the apparent modulus of rigidity, *G*, for each temperature as follows:

$$G = 917TL/ab^3u\varphi \quad (1)$$

where:

G = apparent modulus of rigidity, Pa (or psi),
T = applied torque, N·m (or in.·lbf),
L = specimen length (span), mm (or in.),
a = specimen width (larger cross-sectional dimension), mm (or in.),
b = specimen thickness (smaller cross-sectional dimension), mm (or in.),
φ = angle of deflection of torque pulley, degrees, and
u = value depending on the ratio of a to b. Table 1 gives the values of u for various ratios of a to b. A third column gives thickness if the width is 6.350 mm (0.250 in.). If Table 1 is not adequate, calculate u by means of the equation given in Annex A1.

9.2 Plot the apparent modulus of rigidity values, calculated in accordance with 9.1, on a logarithmic scale *versus* temperature on a linear scale.

9.3 *Calculation*—Specific Modulus of Rigidity

9.3.1 *Graphic Method*—If desired, read from the graph the temperature at which the apparent modulus of rigidity is equal to a specific value, such as 68.95 MPa, 241.3 MPa, 310.3 MPa, or 930.8 MPa (10 000 psi, 35 000 psi, 45 000 psi, or 135 000 psi). The temperature at which the apparent modulus of rigidity is equal to 310 MPa (45 000 psi) has been designated T_F (see Note A1.1).

9.3.2 *Interpolation Method*—If the increments of temperature change used in the test are relatively small (for example

TABLE 1 Values for *u*[A]

Ratio of Width, *a*, to Thickness, *b*	*u*	Thickness when Width is 6.350 mm (0.250 in.)
2.00	3.66	3.175 mm (0.125 in.)
2.25	3.84	2.819 mm (0.111 in.)
2.50	3.99	2.540 mm (0.100 in.)
2.75	4.11	2.311 mm (0.091 in.)
3.00	4.21	2.108 mm (0.083 in.)
3.50	4.37	1.829 mm (0.072 in.)
4.00	4.49	1.600 mm (0.063 in.)
4.50	4.59	1.422 mm (0.056 in.)
5.00	4.66	1.270 mm (0.050 in.)
6.00	4.77	1.067 mm (0.042 in.)
7.00	4.85	0.914 mm (0.036 in.)

[A] Taken from Trayer and March, *Report 334*, National Advisory Committee for Aeronautics, 1929.

AVA Documents
Document Sharing Hub

Full document details: ASTM D1043-16(2024)

about 3°C or 5°F), it is often possible to interpolate between test points to determine the temperature for a specific apparent modulus of rigidity, such as 310.3 MPa (45,000 psi).

9.3.2.1 Locate the apparent modulus of rigidity above and below the desired modulus of rigidity and within ±34.5 MPa (±5000 psi).

Calculate the temperature (T_{Sp}) for the specific modulus of rigidity using the equation:

$$T_{Sp} = T_1 + \frac{(T_2 - T_1) \times (\log G_{T_1} - \log(\textit{specific modulus of rigidity}))}{(\log G_{T_1} - \log G_{T_2})} \quad (2)$$

For T_F, the equation is:

$$T_F = T_1 + \frac{(T_2 - T_1) \times (\log G_{T_1} - \log 45000)}{(\log G_{T_1} - \log G_{T_2})} \quad (3)$$

where:

T_1 = lower of the two test temperatures,
T_2 = higher of the two test temperatures,
G_{T_1} = apparent modulus of rigidity at temperature T_1, psi, and
G_{T_2} = apparent modulus of rigidity at temperature T_2, psi.

10. Report

10.1 Report the following information:

10.1.1 Complete identification of the material, including name, stock or code number, date made, form, etc.,

10.1.2 Dimensions of the test specimen,

10.1.3 Details of conditioning the specimen prior to testing,

10.1.4 Identification of the heat transfer medium used,

10.1.5 Table of data and results,

10.1.6 Plot of logarithm of apparent modulus of rigidity *versus* temperature,

10.1.7 The temperature at the specified apparent modulus of rigidity values, if desired (see 9.3.1), and

10.1.8 Date of test.

11. Precision and Bias

11.1 Limited precision information is available from one laboratory testing a flexible vinyl material (plasticized PVC) to determine the temperature at which the apparent modulus of rigidity, G, is equal to 241.3 MPa (35,000 psi). Based on this data, the repeatability r is approximately ±2°C for a material with a mean value of –35.7°C (r = 2.83 × standard deviation, see Practice E177).

12. Keywords

12.1 Clash-Berg; modulus of rigidity; plastics; shear; torsion

ANNEXES

(Mandatory Information)

A1. CALCULATIONS

A1.1 Calculation of Factor *u*

A1.1.1 One method to calculate the factor u by the following equation:

$$u = 5.33 - [(3.36\, b/a)(1 - (b^4/12a^4))] \quad (A1.1)$$

where:

u = factor depending on the ratio of a to b,
a = specimen width, mm (or in.), and
b = specimen thickness, mm (or in.).

A1.2 Calculation of Apparent Modulus of Elasticity

A1.2.1 The relationship between modulus of rigidity, G, and modulus of elasticity, E, is expressed by the following equation (λ = Poisson's ratio):

$$E = 2G(1+\lambda) \quad (A1.2)$$

A1.2.2 It has been shown for some highly extensible plastics that the value for E calculated from the above equation agrees well with experimental values obtained by Test Method D747, when Poisson's ratio is assumed to be 0.5, a suitable value for soft rubber at room temperature. It must be emphasized, however, that this is an experimental correlation only.

NOTE A1.1—Because of the correlation between E obtained from this test method and stiffness from Test Method D747, values in the literature have frequently been given in terms of E when this test method has been used. In this case, where Poisson's ratio is assumed to be 0.5, T_F indicates that temperature at which the material exhibits a modulus of elasticity, E, of 930.65 MPa (135,000 psi). The term T_4 has been used to indicate the temperature at which the modulus of elasticity is 68.95 MPa (10 000 psi).

A1.2.3 In general, the calculation of modulus of elasticity from data obtained in this test method is *not* recommended since there is evidence that suggests that Poisson's ratio varies from material to material and that it also varies from temperature to temperature for the same material. In addition, data from the test is obtainable at deflections outside of the elastic limit of the material and thus would give misleading values of E. One method of obtaining a value of modulus of elasticity on tension is described in Test Method D638.

AVA Documents
Document Sharing Hub

Full document details: ASTM D1043-16(2024)