This international standard was developed in accordance with internationally recognized principles on standardization established in the Decision on Principles for the Development of International Standards, Guides and Recommendations issued by the World Trade Organization Technical Barriers to Trade (TBT) Committee.

Designation: D1129 – 24

Standard Terminology Relating to Water[1]

This standard is issued under the fixed designation D1129; the number immediately following the designation indicates the year of original adoption or, in the case of revision, the year of last revision. A number in parentheses indicates the year of last reapproval. A superscript epsilon (ε) indicates an editorial change since the last revision or reapproval.

This standard has been approved for use by agencies of the U.S. Department of Defense.

1. Scope*

1.1 This standard is a compilation of definitions of terms as they are used in standards under the jurisdiction of Committee D19.

1.2 Terminology specific to a D19 subcommittee under the jurisdiction of Committee D19 is included in specialized standards. For example, Terminologies D7902 and D6161.

1.3 In the event of conflict between definitions in Terminology D1129 and definitions in other D19 Terminology standards, the definitions in Terminology D1129 shall govern all Committee D19 standards.

1.4 When a term is used in an ASTM standard for which Committee D19 is responsible, it is included herein only if used in more than one Committee D19 standard. Common terms, used in multiple D19 standards, and common terms for the analysis of water included in Terminology D1129 need not be included in each individual standard provided proper reference to Terminology D1129 is made in the individual standards.

1.5 Terminology approved in Terminology D1129 standards may be added to Terminology D1129 editorially, according to the Committee D19 bylaws. Editorial revisions of Terminology D1129 will be noted next to the latest approval year of the standard by the ASTM Editor according to Form and Style for ASTM Standards.

1.6 The deletion of any term or definition, or both, is a technical change and will require ballot action.

1.7 Subcommittee D19.12 on Terminology is responsible for the required periodic review of this standard to determine if the current content is still appropriate. Revisions will be proposed when determined appropriate.

1.8 This standard includes notes and discussions of definitions that provide supplementary or explanatory information. These notes and discussions shall not be considered as requirements of this standard nor as parts of the definitions.

1.9 *This international standard was developed in accordance with internationally recognized principles on standardization established in the Decision on Principles for the Development of International Standards, Guides and Recommendations issued by the World Trade Organization Technical Barriers to Trade (TBT) Committee.*

2. Referenced Documents

2.1 *ASTM Standards:*[2]

D6161 Terminology Used for Microfiltration, Ultrafiltration, Nanofiltration, and Reverse Osmosis Membrane Processes

D7902 Terminology for Radiochemical Analyses

3. Significance and Use

3.1 This terminology standard describes terms and definitions used in standards maintained by ASTM Committee D19 on Water. The terminology is also recommended for general use in the water analysis community.

4. Terminology

4.1 *Definitions:*

absolute filter rating, *n*—particle size above which 100 % of particles that are trapped on or within the filter medium. **D6161**

absorbance, *n*—logarithm to the base 10 of the reciprocal of the transmittance (T). $A = \log_{10}(1/T) = -\log_{10} T$. **D4691**

absorption, *n*—release for desorption holding of a substance within a solid by cohesive or capillary forces. **D6161**

absorptivity, *n*—absorbance (A) divided by the product of the sample path length (b) and the concentration (c). $a = A/bc$. **D4691**

accelerated erosion, *n*—erosion at a rate greater than geologic or natural erosion.

DISCUSSION—Accelerated erosion is usually associated with anthropogenic activities and usually reduces plant cover and increases runoff. **D4410**

[1] This terminology is under the jurisdiction of ASTM Committee D19 on Water and is the direct responsibility of Subcommittee D19.12 on Terminology.

Current edition approved Nov. 1, 2024. Published November 2024. Originally approved in 1950. Last previous edition approved in 2020 as D1129 – 13 (2020)ε2. DOI: 10.1520/D1129-24.

[2] For referenced ASTM standards, visit the ASTM website, www.astm.org, or contact ASTM Customer Service at www.astm.org/contact. For *Annual Book of ASTM Standards* volume information, refer to the standard's Document Summary page on the ASTM website.

*A Summary of Changes section appears at the end of this standard

Copyright © ASTM International, 100 Barr Harbor Drive, PO Box C700, West Conshohocken, PA 19428-2959. United States

Documents
Document Sharing Hub
Full document details: ASTM D1129-24

acceptable holding time, *n*—any period of time less than or equal to the maximum holding time. **D4841**

acceptable verification ratio (AVR), *n*—ratio of the absolute difference between the measured value of the verification sample and the known value added to the verification sample to the square root of the sum of the squares of their associated combined standard uncertainties.

DISCUSSION—See Eq 14 in 9.2.2.21. **D7282**

accretion, *n*—process of sediment accumulation. **D4410**

accumulator, *n*—pulsation dampener installed on the suction and/or discharge lines of pumps, generally plunger type, to minimize pressure surges and provide uniformity of flow. **D6161**

accuracy, *n*—a measure of the degree of conformity of a value generated by a specific procedure to the assumed or accepted true value, and includes both precision and bias.

accuracy, *n*—closeness of agreement between an observed value and an accepted reference value. Where an accepted reference value is not available, accuracy is a description of a measure of the degree of conformity of a value generated by a specific procedure to the assumed or accepted true value, including both precision and bias. **D6161**

accuracy, *n*—measure of the degree of conformity of a single test result generated by a specific procedure to the assumed or accepted true value, and includes both precision and bias. **D2777**

accuracy, *n*—proportion of the observed count to the true density of a sample. **D5392**

accuracy, *n*—refers to how close a measurement is to the true or actual value. (See Terminology D1129.) **D5906**

acid error, *n*—in very acid solutions, the activity of water is reduced (less than unity) causing a non-Nernstian response in glass electrodes. A positive error in the pH reading results. **D4127**

acidity, *n*—the quantitative capacity of aqueous media to react with hydroxyl ions.

acidity, *n*—quantitative capacity of aqueous media to react with hydroxyl ions. **D6161**

acidity, free mineral, *n*—the quantitative capacity of aqueous media to react with hydroxyl ions to pH 4.3.

acidity, theoretical free mineral, *n*—the free mineral acidity that would result from the conversion of the anions of strong acids in solution to their respective free acids.

acoustic path, *n*—straight line between the centers of two acoustic transducers. **D5389**

acoustic path length, *n*—face-to-face distance between transducers on an acoustic path. **D5389**

acoustic transducer, *n*—device that is used to generate acoustic signals when driven by an electric voltage, and conversely, a device that is used to generate an electric voltage when excited by an acoustic signal. **D5389**

acoustic travel time, *n*—time required for an acoustic signal to propagate along an acoustic path, either upstream or downstream. **D5389**

action level, *n*—concentration of the analyte of concern at which some further action is required or suggested. **D6850**

activated carbon, *n*—granulated or powdered activated carbon used to remove tastes, odor, chlorine, chloramines, and some organics from water. A family of carbonaceous substances manufactured by processes that develop adsorptive properties. **D6161**

activity, *n*—thermodynamically effective concentration of a free ion in solution. In dilute solutions, ionic activity and concentration are practically identical, but in solutions of high ionic strength, or in the presence of complexing agents, activity may differ significantly from concentration. Ionic activity, not concentration, determines both the rate and the extent of chemical reactions. **D4127**

activity coefficient, *n*—factor, γ, that relates activity, A, to the concentration, C of a species in solution:

$$A = \gamma C$$

The activity coefficient is dependent on the ionic strength of the solution. Ions of similar size and charge have similar activity coefficients. **D4127**

activity standard, *n*—standardizing solution whose value is reported in terms of ionic activity. If the electrode is calibrated using activity standards, the activity of the free, unbound ion in the sample is determined. **D4127**

adenosine triphosphate—see **ATP**. **D6161**

adsorption, *n*—holding of a substance onto the surface of a solid by chemical surface forces, without forming new chemical bonds. **D6161**

aerobic bacteria, *n*—bacteria that require oxygen for growth. See **bacteria, aerobes**. **D6161**

aerosol, *n*—any solid or liquid particles, with a nominal size range from 10 nm to 100 µm, suspended in a gas (usually air). **D5544**

agglomeration or flocculation, *n*—coalescence of dispersed suspended matter into large flocs or particles that settle rapidly. **D4410**

aggradation, *n*—geologic process by which stream beds, flood plains, and the bottoms of other water bodies are raised in elevation by the deposition of material eroded and transported by water from other areas. **D4410**

aggregate, *n*—granular material such as sand, gravel, or crushed stone. **D6161**

air header, *n*—pipe running within a cassette that distributes the air to the individual modules or aerators. **D6161**

AVA Documents
Document Sharing Hub

Full document details: ASTM D1129-24

air scour, *v*—distributing air over the entire area at the bottom of a filter media flowing upward or immersed membrane to improve the effectiveness of filtration or backwashing or to permit the use of lower backwash water flow rate, or both. **D6161**

air stripping, *v*—removal of volatile substances from a water solution by passing a gas through the solution. **D6161**

algae, *n*—major group of lower plants, generally aquatic, photosynthetic of extremely varied morphology and physiology, monocellular plants with chlorophyll often masked by a brown or red pigment. **D6161**

alkaline error, *n*—in alkaline solutions, where hydrogen ion activity becomes very small, some glass electrodes respond to other cations, such as sodium. A negative error in the pH reading results. By changing the composition of the glass, the affinity of the glass for sodium ion can be reduced. Such electrodes are known as lithium glass, high-pH, or full-range electrodes. **D4127**

alkalinity, *n*—the quantitative capacity of aqueous media to react with hydrogen ions.

alkalinity, *n*—quantitative capacity of aqueous media to react with hydrogen ions. "M" alkalinity is that which will react with acid as the pH of the sample is reduced to the methylorange endpoint of about 4.5. "P" alkalinity is that which reacts with acid as the pH of the sample is reduced to the phenolphthalein end point of 8.3. "M" is the total alkalinity which is the sum of hydroxide, carbonate, and bicarbonate contents, "P" includes all the hydroxyl and half the carbonate content. **D6161**

alkyl benzene sulfonate (ABS)—generic name applied to the neutralized product resulting from the sulfonation of a branched-chain alkylated benzene.[3] See also Terminology D459. **D2330**

alluvial channel—see **alluvial stream**. **D4410**

alluvial deposit—sediment deposited by the action of moving water. **D4410**

alluvial fans—sediment deposited in the shape of a segment of a cone formed because of a sudden flattening of a stream gradient especially at debouchures of tributaries on main stream flood plains. **D4410**

alluvial stream, *n*—stream whose boundary is composed of appreciable quantities of the sediments transported by the flow and which generally changes its bed forms as the rate of flow changes. **D4410**

alleviation, *n*—process of accumulating sediment deposits at places where the flow is retarded. **D4410**

alluvium, *n*—general term for all fluvial deposits resulting directly or indirectly from the sediment transport of (modern) streams, thus including the sediments laid down in riverbeds, flood plains, lakes, fans, and estuaries. **D4410**

alpha (α), *n*—velocity-head coefficient that adjusts the velocity head computed on basis of the mean velocity to the true velocity head. **D5129**

alpha (α), *n*—velocity-head coefficient that adjusts the velocity head computed on basis of the mean velocity to the true velocity head. It is assumed equal to 1.0 if the cross section is not subdivided. **D5243**

alpha (α), *n*—velocity-head coefficient that represents the ratio of the true velocity head to the velocity head computed on the basis of the mean velocity. It is assumed equal to 1.0 if the cross section is not subdivided. For subdivided sections, a is computed as follows: **D5130**

$$\alpha = \frac{\sum \left(\frac{k_i^3}{A_i^2} \right)}{\frac{K_T^3}{A_T^2}}$$

where:

K and A = the conveyance and area of the subsection indicated by the subscript i, and

K_T and A_T = the conveyance and area of the entire cross section.

alpha (α), *n*—dimensionless velocity-head coefficient that represents the ratio of the true velocity head to the velocity head computed on the basis of the mean velocity. It is assumed equal to unity if the cross section is not subdivided. For subdivided sections, a is computed as follows: **D5388**

$$\alpha = \frac{\sum \left(\frac{k_i^3}{a_i^2} \right)}{\frac{K_T^3}{A_T^2}}$$

where:

k and a = the conveyance and area of the subsection indicated by the subscript i, and

K_T and A_T = the conveyance and area of the total cross section indicated by the subscript T.

alpha particle (α), *n*—particle consisting of two protons and two neutrons emitted from the nucleus of an atom during radioactive decay. **D7316**

alpha particle detection efficiency, *n—in the measurement of radioactivity*, that fraction of alpha particles emitted by a source which are identified as alpha particles by the counter. **D7283**

alpha-to-beta spillover, *n—in the measurement of radioactivity*, that fraction of alpha particles emitted by a source which are misclassified as beta particles. **D7283**

alum, *n*—aluminum sulfate, $AL_2(SO_4)_3XH_2O$ (X = 14-18), a coagulant. **D6161**

ambient temperature, *n*—temperature of the surroundings, generally assumed to be 20–25°C. **D6161**

[3] For a more complete discussion of terms relating to synthetic detergents and their significance, refer to McKinney, R. E., "Syndets and Waste Disposal," *Sewage and Industrial Wastes*, Vol 29, Part 6, June 1957, pp. 654–666.

Document Sharing Hub
Full document details: ASTM D1129-24

American Water Works Association—see **AWWA**. **D6161**

American Water Works Association Research Foundation—see **AWWARF**. **D6161**

amorphous, *adj*—noncrystalline, devoid of regular cohesive structure. **D6161**

amperometric systems, *n*—those instrumental probes that involve the generation of an electrical current from which the final measurement is derived. **D888**

amphoteric, *adv*—capable of acting as an acid or a base. **D6161**

anaerobic bacteria, *n*—bacteria that do not use oxygen. Oxygen is toxic to them. See **bacteria, anaerobes**. **D6161**

analate addition, *n*—variation of the known addition measurement technique in which the sample (analate) is added to a reagent containing the ion being measured. The electrode is placed in the reagent, and the sample concentration is calculated from the change in electrode potential after the addition of the sample. **D4127**

analate subtraction, *n*—variation of the known subtraction measurement technique in which the sample (analate) is added to a reagent containing an ion that reacts with the species being determined. The electrode is placed in the reagent, the change in electrode potential is observed when the sample is added, and the sample concentration calculated. **D4127**

analyte, *n*—a possible sample component whose presence and concentration is of interest.

analyte, *n*—chemical or constituent being determined. **D5463**

analytical column, *n*—chromatography column that contains the stationary phase for separation by ion exchange. The column is packed with anion exchange resin that separates the analytes of interest based on their retention characteristics before detection. **D6994**

analytical column, *n*—column used to separate the anions of interest. **D5996**

analytical column, *n*—ion exchange column used to separate the ions of interest according to their retention characteristics prior to detection. **D6581**

analytical column set, *n*—combination of one or more guard columns, followed by one or more analytical columns used to separate the ions of interest. All of the columns in series then contribute to the overall capacity and resolution of the analytical column set. **D6581**

analytical column set, *n*—combination of one or more guard columns followed by one or more analytical columns. **D5996**

analytical columns, *n*—combination of one or more guard columns followed by one or more separator columns used to separate the ions of interest. It should be remembered that all of the columns in series contribute to the overall capacity of the analytical column set. **D4327**

analytical columns, *n*—combination of one or more guard columns followed by one or more separator columns used to separate the ions of interest. It should be remembered that all of the columns in series contribute to the overall capacity of the analytical column set. **D5542**

analyze, *v*—to determine the relationship of parts or the value of a particular parameter. **D5851**

analyzer—see **monitoring system**. **D3864**

angstrom (A), *n*—unit of length equaling 10^{-10} metres, 10^{-4} umetres, 10^{-8} centimetres, and 3.937×10^{-9} in. The symbol is Å, A, or A.U. **D6161**

animal/vegetable-derived oils, *n*—mixture made of mono-, di-, and triglyceride esters of fatty acids and other substances of animal or vegetable origin, or both. **D3326**

anion, *n*—negatively charged ion. **D6161**

anion exchange chromatography, *n*—type of liquid chromatography in which anionic analytes are separated by differential retention on an anion exchange resin and detected by an appropriate detection mechanism. **D6994**

anion-exchange material, *n*—a material capable of the reversible exchange of negatively charged ions.

anion-exchange material, *n*—ion-exchange material capable of the reversible exchange of negatively charged ions. **D2187**

anion-exchange material, *n*—ion-exchange material capable of the reversible exchange of negatively charged ions. **D4548**

anion exchange material, *n*—material capable of the reversible exchange of negatively charged ions. **D6161**

anion exchange membrane, *n*—membrane containing fixed cationic charges and mobile anions that can be exchanged with other anions present in an external fluid in contact with the membrane. **D6161**

anion suppressor device, *n*—device that is placed between the analytical columns and the detector. Its purpose is to inhibit detector response to the ionic constituents in the eluant so as to lower the detector background and at the same time enhance detector response to the ions of interest. **D5996**

anion trap column, *n*—high-capacity, low-pressure anion exchange column used to remove reagent impurities from the eluent stream. The anion trap column is placed between the eluent reservoir and the gradient pump. **D6994**

anionic polyelectrolyte, *n*—usually acrylamide or acrylamide and acrylic copolymers, negatively charged, used for coagulation/flocculation. See **polyelectrolyte**. **D6161**

anisotropic, *adv*—having different optical properties in different optical planes. These planes are referred to as the alpha, beta, and omega axes. **D1245**

anisotropic membrane, *n*—nonuniform structure in cross section; typically the support substructure has pores much

AVA Documents
Document Sharing Hub

Full document details: ASTM D1129-24

larger than the barrier layer. See **asymmetric membranes**. **D6161**

anode, *n*—positive electrode. **D6161**

anthracite, *n*—granular hard coal used as a filtration media, commonly used as the coarser layer in dual and multimedia filters. **D6161**

antidunes, *n*—bed forms that occur at a velocity higher than that velocity that forms dunes and plane beds. Antidunes commonly move upstream, and are accompanied by, and in phase with, waves on the water surface. **D4410**

antifoulant, *n*—see **antiscalant**. **D6161**

antiscalant, *n*—compound added to a water that inhibits the precipitation of sparingly soluble inorganic salts. **D6161**

anti-telescoping device, *n*—plastic or metal device attached to the ends of a spiral wound cartridge to prevent movement of the cartridge leaves in the feed flow direction as a result of high feed flows. **D6161**

approach angle, *n*—angle between the velocity vector of the approaching flow and the centerline of the nozzle. **D6326**

approaching flow, *n*—flow immediately upstream of a nozzles entrance. **D6326**

aquatic free cyanide, *n*—sum of the free cyanide (HCN and CN^-) and cyanide bound in the metal-cyanide complexes that are easily dissociated into free cyanide under the test conditions described in this method. **D7237**

aqueous bioavailable aluminum, *n*—an extraction of aluminum in aqueous solution in the presence of suspended solids at pH 4.

Discussion—These forms include the metal ions (Al^{+3}) and the aluminum either as monomers or polymers. **D8596**

aquifer, *n*—geologic formation containing water, usually able to yield appreciable water. **D6146**

aquifer, *n*—water-bearing geological formation that provides a ground water reservoir. **D6161**

aramid, *n*—fully aromatic polyamide. **D6161**

area (A), *n*—area of a cross section, parts of a cross section, or parts of bridges below the water surface. Subscripts indicate specific areas as follows: **D5129**

A_i = area of subsection *I*,
A_j = area of piers or piles that is submerged,
A_1 = area of total cross-section 1 (see Fig. 1 of D5129), and
A_3 = gross area of Section 3 of D5129.

armoring, *v*—formation of a resistant layer of relatively large particles by erosion of the finer particles. **D4410**

array, *n*—arrangement of devices connected to common feed, product, and reject headers; that is, a 2:1 array. **D6161**

assess, *v*—to determine importance of data. **D5851**

assess, *v*—to determine the significance, value, and importance of the data collected and recorded. **D6145**

assimilable organic carbon, *n*—see **AOC**. **D6161**

asymmetric membrane, *n*—membrane that has a change in pore structure. See **anisotropic membranes**. **D6161**

asymmetry potential, *n*—potential across a glass pH electrode membrane when the inside and outside of the membrane are in contact with solutions of identical pH. This term has also been used to define the observed potential differences between identical electrode pairs placed in identical solutions. **D4127**

Atmospheric Pressure Chemical Ionization (APCI), *n*—an ionization method used in mass spectrometry which uses a gas-phase ion-molecule reaction at atmospheric pressure coupled with high-performance liquid chromatography (HPLC).

Discussion—APCI is a soft ionization method similar to chemical ionization where primary ions are produced on a solvent spray. The main usage of APCI is for mid-polar and relatively less polar thermally stable compounds with molecular weight less than 1500 Da. **D8456**

atomic absorption, *n*—absorption of electromagnetic radiation by an atom resulting in the elevation of electrons from their ground states to excited states. Atomic absorption spectrophotometry involves the measurement of light absorbed by atoms of interest as a function of the concentration of those atoms in a particular solution. **D4691**

automatic programmable sampler, *n*—portable device designed to collect sequential, discrete water samples representative of the water mixture moving in the river in the vicinity of the sampler at a single point in a cross section. Depending on the make and model of the device, water samples can be collected at equal or variable time intervals. **D5613**

autopsy, *n*—dissection of a membrane module or element to investigate causes of unsatisfactory performance. **D6161**

available cyanide—inorganic cyanides that are free (HCN and CN^-) and metal-cyanide complexes that are easily dissociated into free cyanide ions. Available cyanide does not include the less toxic strong metal-cyanide complexes, cyanides that are not "amenable to chlorination." **D6888**

availability, *n*—on-stream time or rated operating capacity of a water treatment system. **D6161**

a-value, *n*—membrane water permeability coefficient. The coefficient is defined as the amount of water produced per unit area of membrane per unit of net driving pressure (NDP); units of measurement are m3/h/m2/kPa. **D6161**

avulsion, *n*—sudden, natural change of a stream channel, so that the water flows elsewhere than in its previous course. **D4410**

B-value—salt diffusion coefficient, *n*—defined as the amount of salt transferred per unit area of membrane per unit of concentration difference across the membrane. A unit of measurement is m/h or more specifically, $m^3/m^2/h$. **D6161**

back pressure regulator—a device designed to maintain a constant pressure upstream of itself (variable or fixed back

AVA Documents
Document Sharing Hub

Full document details: ASTM D1129-24

pressure regulators are available) to maintain constant flow in analyzers in continual sampling. **D3370**

back titration, *n*—see **titration**. **D4127**

backflush, *n*—temporary reversal of the permeate or retentate flow. **D6161**

backflush, *n*—practice of reversing the flow through *(1)* the analytical column at the column connection or *(2)* a pre-column located between the injection port and the column.

DISCUSSION—This practice prevents high boiling sample constituents from entering and perhaps contaminating the column, which significantly reduces sample analysis cycle time.[4] **D1129**

background sample, *n*—sample taken from a location on or proximate to the site of interest. This sample is taken to document baseline or historical information. **D5612**

background subtraction count (BSC), *n*—a source count used to determine the background to be subtracted from the sample test source count. **D7282**

backpulse, *n*—pumping treated water with or without added chemicals in the reversed direction from the lumen to the feed side of the membrane (inside out). **D6161**

backwash, *n*—reversing the flow of water with/without air either across or through a medium or membrane. Designed to remove the collected foreign material from the bed or membranes. **D6161**

bacteria, *n*—any of a class of microscopic single-celled organisms reproducing by fission or by spores. Characterized by round, rod-like, spiral, or filamentous bodies, often aggregated into colonies or mobile by means of flagella. Widely dispersed in soil, water, organic matter, and the bodies of plants and animals. Either autotrophic (self-sustaining, self-generative), saprophytic (derives nutrition from nonliving organic material already present in the environment), or parasitic (deriving nutrition from another living organism). Often symbiotic (advantageous) in man, but sometimes pathogenic. **D6161**

bacterial lawn, *n*—confluent growth of bacteria cultured on an agar plate. **D6734**

bactericide, *n*—agent capable of killing bacteria. **D6161**

bacteriostat, *n*—substance that prevents bacterial growth and metabolism but does not necessarily kill them. **D6161**

baffle, *n*—deflector plate in a vessel that disperses the inlet fluid. **D6161**

bag sampler—a sampler that uses a collapsible bag as the sample collection container. **D4410**

bank, *n*—grouping of devices. See **array, block, train**. **D6161**

bar, *n*—section of metallic channel, I-beam, T-beam, pipe, plate, or ball that will reflect sound waves produced by a fathometer. **D6318**

bar, *n*—unit of pressure; 14.50 lbs/in.^{2}, 1.020 kg/cm^2, 0.987 atm, 0.1 MPa. **D6161**

bar-check, *n*—method for calibrating a fathometer by setting a sound or acoustic reflector (bar) below a survey vessel to a known depth below a sounding transducer. **D6318**

bar-check, *n*—method for determining depth below a survey vessel by means of a long, narrow metal bar or beam suspended on a marked line beneath a sounding transducer. **D5073**

bar sweep, *n*—bar or pipes, suspended by wire or cable beneath a floating vessel, used to search for submerged snags or obstructions hazardous to navigation. **D5073**

base flow, *n*—stream flow that is sustained by ground water and other delayed sources. **D4410**

batch, *n*—in the analysis of water, a group of samples to be analyzed, assembled in such a way that all the variables affecting the batch will affect all the samples and standards in the batch in a statistically equivalent manner.

DISCUSSION—Batching is a fundamental quality-control component. With properly constructed batches, the results of quality control elements can be used reliably to identify out-of-control situations in the analytical system and to assign uncertainty to individual results from the batch.

batch, *adj*—in the analysis of water, characterizing standards that are carried through all of the analytical steps attached to the analytical method being employed.

batch, *n*—set (group) of samples analyzed such that results of analysis of the QC samples (laboratory control sample, method blank, matrix spike, and duplicate or matrix spike duplicate) analyzed with the batch are indicative of the quality of the results of analysis of samples in the batch. The number of samples in the batch is defined by the task group responsible for the method. See 6.4 and Explanation 2 in Appendix X1 of Practice D5847. **D5847**

DISCUSSION—When results from tests of any of the QC samples associated with the batch fail to meet the performance criteria, the test method should define the appropriate corrective action. To make such a response valid, the batch shall be constructed in such a way as to assure that all variables affecting the batch will affect all samples in the batch in a statistically equivalent manner.

batch, *n*—set (group) of samples analyzed such that results of analysis of the QC samples analyzed with the batch are indicative of the quality of the results of analysis of samples in the batch. The number of samples in the batch is defined by the task group responsible for the method. **D6850**

DISCUSSION—See Practice D5847 for definition and discussion of batch and batch size.

batch QC, *n*—all the quality control samples and standards included in an analytical procedure. **D8024**

baseline, *n*—primary reference line for use in measuring azimuth angles and positioning distances. **D5906**

baume scale, Be, *n*—measure of the density of a solution relative to water. **D6161**

[4] Andrew Tipler, inventor, 1999 Aug. 3, Backflushing System for Gas Chromatography, United States Patent US5,933,357.

AVA Documents Document Sharing Hub

Full document details: ASTM D1129-24

$$BE = 145 - \frac{145}{\text{specific gravity*}}$$

United States for densities greater than unity.

$$BE = \frac{140}{\text{specific gravity*}} - 130$$

For densities less than unity.
*at 60°F

beam width, *n*—angle in degrees made by the main lobe of acoustical energy emitted from the radiating face of a transducer. **D5073**

Becke line, *n*—faint, halo-like line that surrounds a crystal when the crystal is mounted in an oil of different refractive index. It increases in intensity as the difference in the refractive index between the crystal and the oil increases. **D1245**

Becquerel, *n*—unit of radioactivity equivalent to one nuclear transformation per second. **D1890**

bed depth, *n*—depth of the filter medium or ion exchange resin in a vessel. **D6161**

bed expansion, *n*—depth increase of filter medium or ion exchange resin that occurs during backwashing. **D6161**

bed-load, *n*—material moving on or near the stream bed by rolling, sliding, and skipping. **D4410**

bed-load discharge, *n*—quantity of bed-load passing a cross section of a stream in a unit of time. **D4410**

bed-load sampler, *n*—device for sampling the bed-load. **D4410**

bed material, *n*—sediment mixture of which the stream bed is composed. **D4410**

bed-material discharge, *n*—that part of the total sediment discharge composed of grain sizes occurring in appreciable quantities in the bed material. **D4410**

bed-material load, *n*—that part of the total load which is composed of particle sizes present in appreciable quantities in the shifting portions of the stream bed. **D4410**

best available technology—see **BAT**. **D6161**

best management practice (BMP), *n*—practice or combination of practices that are determined by state or area-wide planning agencies to be the most effective and practical means of controlling point and nonpoint pollution. **D6145**

beta energy, maximum, *n*—maximum energy of the beta-particle energy spectrum produced during beta decay of a given radioactive species. **D1890**

DISCUSSION—Since a given beta-particle emitter may decay to several different quantum states of the product nucleus, more than one maximum energy may be listed for a given radioactive species.

beta energy, maximum, *n*—the maximum energy of the beta particle energy spectrum produced during beta decay of a given radionuclide.

DISCUSSION—Since a given beta emitter may decay to several different nuclear energy levels of the progeny, more than one maximum energy may be listed for a given radionuclide. **D7283**

beta particle (β), *n*—electron or positron emitted from the nucleus of an atom during radioactive decay. **D7316**

beta particle detection efficiency, *n—in the measurement of radioactivity*, that fraction of beta particles emitted by a source which are identified as beta particles by the counter. **D7283**

beta-to-alpha spillover, *n—in the measurement of radioactivity*, that fraction of beta particles emitted by a source which are misclassified as alpha particles. **D7283**

bias, *n*—the persistent positive or negative deviation of the method average value from the assumed or accepted true value.

bias, *n*—persistent positive or negative deviation of the average value of a test method from the assumed or accepted true value. **D2777**

bias, *n*—persistent positive or negative deviation of the average value of the test method from the assumed or accepted true value. **D5392**

binders, *n*—in reference to cartridge filters, chemicals used to hold, or "bind," short fibers together in a filter. **D6161**

binding, *n*—in surface filtration, a buildup of particulates on the filter, restricting fluid flow through the filter at normal pressures. **D6161**

biochemical oxygen demand (BOD), *n*—the quantity of oxygen consumed in the biological and chemical oxidation of water-borne substances under conditions of test.

biocide, *n*—substance that kills all living organisms. **D6161**

biodegradable plastic, *n*—degradable plastic in which the degradation results from the action of naturally occurring microorganisms such as bacteria, fungi, and algae. **D6888**

biological deposits, *n*—deposits of organisms or the products of their life processes.

biological deposits, *n*—debris left by organisms as a result of their life processes. **D6161**

biological deposits—water-formed deposits of organisms or the products of their life processes. **D887**

biomass, *n*—any material that is or was a living organism or excreted from a microorganism. **D6161**

bioremediation, *n*—biological degradation treatment of waste sludge and soils to breakdown organic and hydrocarbons. **D6161**

biostat, *n*—substance that inhibits biological growth. **D6161**

bipolar membrane, *n*—synthetic membrane containing two oppositely charged ion-exchange layers that are in contact with each other. **D6161**

AVA Documents
Document Sharing Hub

Full document details: ASTM D1129-24

blackwater, *n*—increase in the depth of flow upstream of a channel obstruction, in this case, a weir or flume. **D5640**

blank, *n*—matrix carried through all or part of the analytical process, where the analyte is not present, or where the analyte response is suppressed.

NOTE 1—A blank must be appropriate to the analytical process it is being used with.

NOTE 2—A blank is typically used to monitor contamination or to establish a baseline for quantitation.

block, *n*—grouping of devices in a single unit having common control. See **array, bank, train**. **D6161**

BOD, *n*—biochemical oxygen demand.

body feed, *v*—continuous addition of filter medium (for example, diatomaceous earth) to sustain the efficacy of the filter. **D6161**

bottom profile, *n*—line trace of the bottom surface beneath a water body. **D5073**

bottomset bed, *n*—fine-grained material (usually silts and clays) slowly deposited on the bed of a quiescent body of water which may in time be buried by foreset beds and topset beds. **D4410**

boulder size (fluvial sediment), *n*—larger than 256 mm in diameter. **D4410**

boundary layer, *n*—relatively thin layer of viscous influence adjacent to the probe (or any solid) surface caused by the requirement that the water velocity must be zero at the wall. **D5089**

boundary layer, *n*—thin layer at the membrane surface where water velocities are significantly less than those in the bulk flow. **D6161**

boundary layer displacement thickness, *n*—boundary layer is a layer of fluid flow adjacent to a solid surface (in this case, the flume throat) in which, owing to viscous friction, the velocity increases from zero at the stationary surface to an essentially frictionless-flow value at the edge of the layer. The displacement thickness is a distance normal to the solid surface that the surface and flow streamlines can be considered to have been displaced by virtue of the boundary-layer formation. **D5390**

boundary layer displacement thickness, *n*—boundary layer is a layer of fluid flow adjacent to a solid surface (in this case, the weir crest and sidewalls) in which, because of viscous friction, the velocity increases from zero at the stationary surface to an essentially frictionless-flow value at the edge of the layer. The displacement thickness is a distance normal to the solid surface that the flow streamlines can be considered to have been displaced by virtue of the boundary-layer information. **D5614**

brackish water, *n*—water that contains dissolved matter at an approximate concentration range from 1000 to 30 000 mg/L.

brackish water, *n*—water with an approximate concentration of total dissolved solids ranging from 500 to 10 000 mg/L. See **high brackish water, potable water, sea water**. **D6161**

braided river, *n*—wide- and shallow-river where the flow passes through a number of small interlaced channels separated by bars or shoals. **D4410**

brackish water reverse osmosis, *n*—see **BWRO**. **D6161**

breakpoint chlorination, *n*—point at which the water chlorine demand is satisfied and any further chlorine is the chlorine residual, the "free" chlorine species. **D6161**

break tank, *n*—storage device used for hydraulic isolation and surge protection. **D6161**

breakthrough volume, *n*—maximum sample volume that can be passed through a concentrator column before the least tightly bound ion of interest is eluted. **D5542**

breakthrough volume, *n*—maximum sample volume that can be passed through a concentrator column before the least tightly bound ion of interest is eluted. All of the columns in series contribute to the overall capacity of the analytical column set. **D5996**

brine, *n*—water that contains dissolved matter at an approximate concentration of more than 30 000 mg/L.

brine, *n*—concentrate (reject) stream from a crossflow membrane device performing desalination. Portion of the feed stream that does not pass through the membrane. **D6161**

brine, *n*—water that contains dissolved matter at an approximate concentration of more than 30 000 mg/L. **D1429**

brine (concentrate) seal, *n*—rubber lip seal on the outside of a spiral wound cartridge that prevents feed by-pass between the cartridge and the inside pressure vessel wall. **D6161**

brine seal carrier, *n*—see **ATD**. **D6161**

brine system staging, *n*—process in which the concentrate, under pressure, of a group of membrane devices is fed directly to another set of membrane devices to improve the efficiency of the water separation. **D6161**

bubble point, *n*—pressure differential at which bubbles first appear on one surface of an immersed porous membrane as gas pressure is applied to the other side. **D6161**

bubble point, *n*—when the pores of a membrane are filled with liquid and air pressure is applied to one side of the membrane, surface tension prevents the liquid in the pores from being blown out by air pressure below a minimum pressure known as the bubble point. **D6908**

bubble point pressure, *n*—pressure differential necessary to displace a liquid held by surface tension forces from the largest equivalent capillaries in a membrane filter. **D6161**

bubble point test, *n*—nondestructive membrane filter test used to assess filter integrity and proper installation. **D6161**

buffer, *n*—substance in solution that accepts hydrogen or hydroxyl ions added to the solution minimizing a change in pH. **D6161**

build, own, operate—see **BOO**. **D6161**

AVA Documents
Document Sharing Hub

Full document details: ASTM D1129-24

build, own, operate and transfer—see **BOOT**. **D6161**

bundle, *n*—general term for a collection of parallel filaments or fibers. **D6161**

cage, *n*—structural fabrication fitted around the perimeter of the cassette with one or more lifting eye suitable for installing or removing the cassette. The four bottom corners of the cage rest within the frame in the tank. **D6161**

cake layer, *n*—layer comprised of particulate materials residing on the upstream face of a membrane. **D6161**

calcium carbonate equivalents (mg/L as $CaCO_3$), *n*—method for expressing mg/L as ion in terms of calcium carbonate. Concentration in calcium carbonate equivalents is calculated by multiplying concentration in mg/L of the ion by the equivalent weight of calcium carbonate (50) and dividing by the equivalent weight of the ion. (See Table 1 of Terminology D6161). **D6161**

calcium hypochlorite, *n*—Ca $(HCIO)_2$, a disinfection agent. **D6161**

calibration, *n*—in the analysis of water, the analysis of standards to develop a relationship between raw output of an analytical system and analyte concentration.

Discussion—Calibration can be done with traceable or non-traceable standards. Calibration can be done with standards that are processed identically to samples to produce "true" results, unbiased by recovery (of the standard), or calibration can be done with unprocessed standards, typically in situations where recovery is not considered a significant issue.

calibration, *n*—certified evaluation of the accuracy of a measuring instrument as performed by its manufacturer or an independent licensed or accredited third party. **D6104**

calibration, *n*—certified evaluation of the accuracy of a measuring instrument as performed by its manufacturer or an independent licensed or accredited third party. **D6157**

calibration, *n*—determination of an instrument's response to a known amount of radioactive material.

Discussion—Instrument calibrations may include calibrations for counting efficiency, energy, and resolution. **D7282**

calibration blank, *n*—volume of water containing the same acid matrix as the calibration standards. **D1976**

calibration blank, *n*—volume of water containing the same acid matrix as the calibration standards. **D5673**

calibration factor, CF, *n*—area/concentration of the polymer-specific ion in the pyrogram versus the amount of the standard, evaluated from a plot.

Discussion—CF is often referred to as response factor (RF) when there is an internal standard calibration. **D8401**

calibration curve, *n*—plot of the potential (emf) of a given ion-selective electrode cell assembly (ion-selective electrode combined with an identified reference electrode) versus the logarithm of the ionic activity (concentration) of a given species. For uniformity, it is recommended that the potential be plotted on the ordinate (vertical axis) with the more positive potentials at the top of the graph and that pa_A (-log activity of the species measured, *A*) or pc_A (-log concentration of species measured, *A*) be plotted on the abscissa (horizontal axis) with increasing activity to the right. **IUPAC, D4127**

calibration curve, *n*—functional model that calculates counting efficiency from the value of a predictor variable and one or more model parameters; also known as an efficiency curve.

Discussion—A calibration "curve" might be a linear or nonlinear function of the predictor variable. **D8537**

calibration parameter, *n*—any of the parameters in a calibration model whose values are determined by a calibration and subsequently used together with observed values of the predictor variable to calculate counting efficiencies. **D8537**

calibration range, *n*—interval between the least and greatest values of the predictor variable for which a calibration curve is considered valid. **D8537**

calibration reference standard, CRS, *n*—mixture or solution prepared from the primary polymer standards.

Discussion—Calibration reference standards are used to calibrate the instrument response with respect to analyte amount. **D8401**

calibration source, *n*—a body of radioactive material of known composition, prepared and configured for calibrating nuclear instruments.

Discussion—A calibration source used for efficiency calibration must have quantity values and uncertainties with documented traceability to the SI. **D7282**

calibration standard, *n*—solution prepared from the primary dilution standard solution and stock standard solutions of the internal standards and surrogate analytes. The calibration standards are used to calibrate the instrument response with respect to analyte concentration. **D5790**

calibration standard, *n*—solution containing the analyte of interest at a known concentration either purchased from an external source or prepared in-house from materials of known purity or concentration, or both, and used to calibrate the measurement system. **D5847**

calibration standard (CAL), *n*—solution prepared from the primary dilution standard solution and stock standard solutions of the internal standards and surrogate analytes. CAL solutions are used to calibrate the instrument response with respect to analyte concentration. **D5315**

calibration standard (CAL), *n*—solution prepared from the primary dilution standard solution and stock standard solutions of the internal standards and surrogate analytes. **D5475**

Discussion—The CAL solutions are used to calibrate the instrument response with respect to analyte concentration.

calibration standards, *n*—series of known standard solutions used by the analyst for calibration of the instrument (preparation of the analytical curve). **D1976**

calibration standards, *n*—series of known standard solutions used by the analyst for calibration of the instrument (that is, preparation of the analytical curve). **D5673**

AVA Documents
Document Sharing Hub

Full document details: ASTM D1129-24

calibration stock solution, *n*—solution prepared from the stock standard solution(s) to verify the instrument response with respect to analyte concentration. **D5673**

calibration turbidity standard, *n*—a turbidity standard that is traceable and equivalent to the reference turbidity standard to within statistical errors; calibration turbidity standards include commercially prepared 4000 NTU formazin, stabilized formazin, and styrenedivinylbenzene (SDVB).

DISCUSSION—These standards may be used to calibrate the instrument. Calibration standards may be instrument specific. **D6698**

calibration turbidity standard, *n*—a turbidity standard that is traceable and equivalent to the reference turbidity standard to within statistical errors, including commercially prepared 4000 NTU Formazin, stabilized formazin (see 9.2.3), and styrenedivinylbenzene (SDVB) (see 9.2.4). These standards may be used to calibrate the instrument. **D6855**

DISCUSSION—Calibration standards may be instrument specific.

calibration verification standards, *n*—defined standards used to verify the accuracy of a calibration in the measurement range of interest.

DISCUSSION—These standards may not be used to perform calibrations, only calibration verifications. Included standards are opto-mechanical light-scatter devices, gel-like standards, or any other type of stable-liquid standard. Calibration verification standards may be instrument specific. **D6698**

calibration verification standards, *n*—defined standards used to verify the accuracy of a calibration in the measurement range of interest. These standards may not be used to perform calibrations, only calibration verifications. Included standards are optomechanical light scatter devices, gel-like standards, or any other type of stable liquid standard. **D6855**

DISCUSSION—Calibration verification standards may be instrument specific.

calibrations:

laboratory check sample for flow-through systems, n—calibration curve calculated from withdrawn samples or additional standards that may be spiked or diluted and analyzed using the appropriate laboratory analyzer. **D3864**

line sample calibration, n—coincidental comparison of a line sample and adjustment of a continuous analyzer to the compared laboratory analyzer or a second continuous analyzer. **D3864**

multiple standard calibration, n—where the calibration curve is calculated from a series of calibration standards covering the range of the measurements of the sample being analyzed. **D3864**

probe calibration, n—where the probe is removed from the sample stream and exposed to a calibration solution and the analyzer is adjusted to indicate the appropriate value. Alternately, two probes are exposed to the same solution and the on-line analyzer is adjusted to coincide with the pre-calibrated laboratory instrument. **D3864**

reference sample calibration, n—coincidental comparison of a reference sample and adjustment of a continuous analyzer to the compared laboratory analyzer results. **D3864**

capillary ion electrophoresis, *n*—electrophoretic technique in which a UV-absorbing electrolyte is placed in a 50- to 75-µm fused silica capillary. Voltage is applied across the capillary causing electrolyte and anions to migrate towards the anode and through the capillary's UV detector window. Anions are separated based upon the their differential rates of migration in the electrical field. Anion detection and quantitation are based upon the principles of indirect UV detection. **D6508**

carbamates, *n—in Test Method D7645*, aldicarb, aldicarb sulfone, aldicarb sulfoxide, carbofuran, methomyl, oxamyl, and thiofanox collectively. **D7645**

carbonate hardness, *n*—hardness in a water caused by carbonates and bicarbonates of calcium and magnesium. The amount of hardness equivalent to the alkalinity formed and deposited when water is boiled. In boilers, carbonate hardness is readily removed by blowdown. **D6161**

carryover, *n*—contamination of a subsequent sample by a previous sample, typically a result of incomplete cleaning of a reused test kit component. **D5463**

cartridge, *n*—see **spiral-wound cartridge**. **D6161**

cassette, *n*—assembly of membrane elements (or modules), membrane aerators, air and permeate manifolds, and hardware in the cage; this is how the membranes are installed or removed from the process tank. **D6161**

catalyst, *n*—substance whose presence initiates or changes the rate of a chemical reaction, but does not itself enter into the reaction. **D6161**

cathode, *n*—negative electrode. **D6161**

cation, *n*—positively charged ion. **D6161**

cation conductivity, *n*—a conductivity measurement performed on water after cations have been exchanged for protons using cation exchange media.

cation conductivity, *n*—parameter obtained by conditioning a sample by passing it through a hydrogen form cation ion exchange resin column and then measuring its electrolytic conductivity, on-line. **D6504**

cation-exchange material, *n*—a material capable of the reversible exchange of positively charged ions.

cation-exchange material, *n*—ion-exchange material capable of the reversible exchange of positively charged ions. **D2187**

cation-exchange material, *n*—ion-exchange material capable of the reversible exchange of positively charged ions. **D4548**

cation exchange material, *n*—material capable of the reversible exchange of positively charged ions. **D6161**

cation exchange membrane, *n*—membrane containing fixed anionic charges and mobile cations that can be exchanged with other cations present in an external fluid in contact with the membrane. **D6161**

cationic polyelectrolyte, *n*—polymer containing positively charged groups used for coagulation flocculation, mainly

AVA Documents
Document Sharing Hub

Full document details: ASTM D1129-24

dimethyl-aminoethyl methacrylate or dimethyl-aminoethyl acrylate. See **polyelectrolyte**. **D6161**

caustic embrittlement, *n*—a form of metal failure that occurs in steam boilers at riveted joints and at tube ends, the cracking being predominantly intercrystalline.

cell, *n*—independently fed chamber formed by two adjacent ion exchange membranes, or by a membrane and an adjacent electrode. **D6807**

cell constant, *n*—ratio of the length of the path, *L* (cm) and the cross-sectional area of the solution, *A* (cm^2), between the electrodes of a conductivity/resistivity cell, with units of cm^{-1}. In high-purity water measurements, the cell constant is normally between 0.001 and 0.1 cm^{-1} to prevent electrical interference. This is lower than the 1 cm^{-1} of the standard centimetre cube and is taken into account by direct reading instrument ranges that are matched with specific cell constants. **D5391**

cell monolayer, *n*—single layer of cells grown on a glass or plastic surface to which they are securely attached. **D5244**

cellulose, *n*—amorphous carbohydrate ($C_6H_{10}O_5$) that is the principal constituent of wood and plants. **D6161**

cellulose acetate (CA), *n*—in the broad sense, any of several esters of cellulose and acetic acid. **D6161**

celsius (°C), *n*—designation of the degree on the International Practical Temperature Scale. Formerly called centigrade, °C = °K minus 273.15. K = Kelvin. °C = (°F –32) * 0.556. **D6161**

censored measurement, *n*—measurement that is not reported numerically nor is reported missing but as a nondetect or a less-than, for example, "less than 0.1 ppb." The former means that an algorithm in the measurement system determined that the measurement should not be reported numerically for one of two reasons: either it was considered not sufficiently precise or accurate, or the identification of the analyte was suspect. A reported less-than may have the same meaning, but it also implies (perhaps erroneously) that any concentration greater than or equal to the accompanying value (for example, 0.1 ppb) can be measured and will be reported numerically. **D6091**

censored measurement, *n*—measurement that is not reported numerically nor is reported missing, but is stated as a nondetect or a less-than (for example, "less than 0.1 ppb"). There are two reasons why the measurement may not be reported numerically. Either the measurement was considered insufficiently precise or accurate (these kinds of data should not be censored), or the identification of the analyte was suspect (these kinds of data should be censored). See 6.2.3.1 of Practice D6512. A reported "less than" may have the same meaning as a non-reported measurement, but a reported "less than" also implies (perhaps erroneously) that any concentration greater than or equal to the accompanying value (for example, 0.1 ppb) can be measured, and will be reported numerically. **D6512**

centigrade, *n*—since 1948, now called Celsius, a temperature scale. **D6161**

centroid, *n*—center of mass of the dye response curve calculated as outlined by Parker and Hunt.[5] **D5613**

ceramic membrane, *n*—generally a glass, silica, alumina, or carbon-based membrane. Generally used in micro and ultrafiltration. They tend to withstand high temperatures and wide pH ranges and be more chemically inert than polymeric membranes. **D6161**

certified calibration source (CCS), *n*—a calibration source (see **calibration source**) accompanied by a certificate that provides the values, uncertainties, and reference date of the source's primary radioactive constituents, with documentation of metrological traceability to the SI.

DISCUSSION—ANSI N42.22 describes the required content of the certificate and presents criteria for ensuring traceability of radionuclide sources to NIST. **D7282**

certified reference material, *n*—reference material, accompanied by a certificate, one or more of whose property values are certified by a procedure that established its traceability to an accurate realization of the unit in which the property values are expressed and for which each certified value is accompanied by an uncertainty at a stated level of confidence. **ISO Guide 30:1992, D6568**

DISCUSSION—There is significant variation in the overall quality of commercially available Certified Reference Materials and caution should be used when choosing Certified Reference Materials. Use Practice D6362 to provide guidance as to what information needs to be included on certificate of a certified reference material.

chain of custody, *n*—documented accountability of each sample, that is, date, time, and signature of each recipient when the sample changes hands, from the time of collection until the requirement for each sample is terminated. **D4489**

channel, *n*—natural or artificial waterway that periodically or continuously contains moving water. **D4410**

channel-fill deposits, *n*—deposits of sediment within a channel, partly or completely filling the channel. Such materials accumulate where the transporting capacity has been insufficient to remove it as rapidly as it has been delivered. **D4410**

channeling, *v*—unequal flow distribution in the desalination bundle or filter bed. **D6161**

characteristic ion, *n*—usually the primary ion in the mass spectrum used to measure response for quantitation purposes. When there are interferences in the mass chromatogram of a primary ion, a secondary characteristic ion must be used for quantitation. **D4128**

charge-mosaic membranes, *n*—synthetic membranes composed of two-dimensional or three-dimensional alternating

[5] Parker, G. W., and Hunt, G. S., "Initial Assessment of Time-of-Travel Through Gulf Island Pond and the Lower Androscoggin River, Maine," *U.S. Geological Survey Water-Resources Investigations Report 83-4020*, 1983.

AVA Documents
Document Sharing Hub

Full document details: ASTM D1129-24

cation and anion exchange channels throughout the membrane. **D6161**

check valve, *n*—device (see Fig. 1) mounted atop an open-barrel core sampler. As the sampler moves down through water and sediment, the valve remains open to allow water to flow up through the barrel. When downward motion stops, the valve closes. During retrieval, the valve remains closed and creates suction that holds the core inside the barrel. **D4823**

check valve, *n*—valve that will allow water to pass in one direction but will close and prevent flow in the opposite direction. **D6161**

chelating agent, *n*—sequestering or complexing agent that, in aqueous solution, renders a metallic ion inactive through the formation of an inner ring structure with the ion. **D6161**

chemical, *n*—in the analysis of water, a mono-molecular or mono-elemental material of acceptable purity, manufactured for application in conducting analyses.

chemical feed pump, *n*—pump used to meter chemicals, such as chlorine of polyphosphate, into a feed water supply. **D6161**

chemical oxygen demand—see **COD**. **D6161**

chemical suppressor device, *n*—device that is placed between the analytical columns and the detector. Its purpose is to inhibit detector response to the ionic constituents in the eluent, so as to lower the detector background and at the same time enhance detector response to the ions of interest. **D4327**

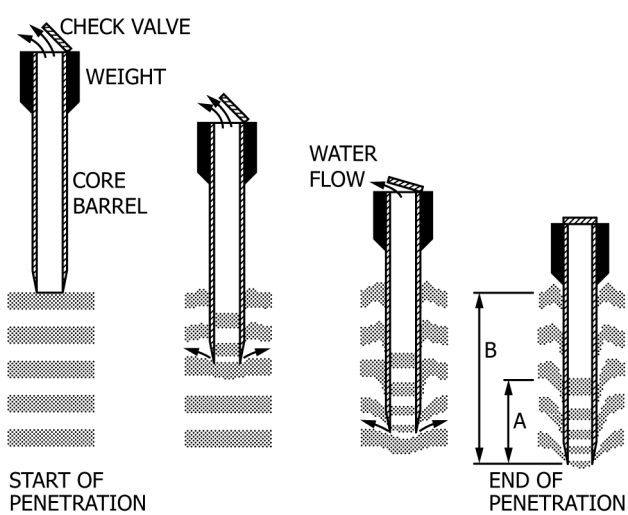

NOTE 1—Dark bands represent stiff sediments; light bands represent plastic sediments. As coring proceeds, sediment below the barrel moves laterally away from the cutting edge and plastic sediments inside the barrel are compressed. "A" is the core's length and "B" is the barrel's penetration depth.

NOTE 2—Source: Weaver, P. P. E., and Schultheiss, P. J., "Detection of Repenetration and Sediment Disturbance in Open-Barrel Gravity Cores," *Journal of Sedimentary Petrology*, Vol 53, No. 2, June 1983, pp. 649–654.

FIG. 1 Deformations Caused by Open-Barrel Core Samplers

chemiluminescence, *n*—generation of light by a chemical reaction. **D6592**

chloramines, *n*—combination of chlorine and ammonia in water which has bactericidal qualities for a longer time than does free chlorine. **D6161**

chlorine, *n*—chemical used for its qualities as a bleaching or oxidizing agent and disinfectant in water purification. **D6161**

chlorine demand, *n*—amount of chlorine that must be added to a unit volume of water under specified conditions of pH, temperature, and contact time to completely react with all chlorine-reactable substances in the water. It is defined as the difference between the amount of chlorine applied and the amount of free chlorine remaining at the end of the contact period. **D1291**

chlorine demand, *n*—amount of chlorine used up by reacting with oxidizable substances in water before chlorine residual can be measured. **D6161**

chlorine, combined available, *n*—residual chlorine combined with ammonia nitrogen or nitrogenous compounds.

chlorine, free available, *n*—the hypochlorite ions (OCl^-), hypochlorous acid (HOCl) or the combination thereof present in water.

chlorine, free available, *n*—chlorine (Cl_2), hypochlorite ions (OCl^-), hypochlorous acid (HOCl), or the combination thereof present in water. **D6161**

chlorine requirement, *n*—the amount of chlorine required to achieve, under specified conditions, the objectives of chlorination.

chlorine requirement, *n*—amount of chlorine that shall be added to a unit volume of water under specified conditions of pH, temperature, and contact time to achieve the objectives of chlorination. **D1291**

chlorine residual, *n*—the amount of available chlorine present in water at any specified time.

chlorine, residual, *n*—amount of available chlorine present in water at any specified time. **D6161**

chlorine, total available, *n*—sum of free available chlorine plus chloramines present in water. **D6161**

chlorinity, *n*—weight of silver ion (g) required to precipitate completely the halides in 0.3285 kg of water (g/kg). **D1141**

chlorophyll, *n*—class of pigments involved in photosynthesis. **D3731**

chloroplatinate unit—see **CPU**. **D6161**

chlorosity, *n*—the concentration of the dissolved chloride equivalent in water at 20°C.

citric acid, *n*—$C_3H_4(OH)(CO_2H)_3$, membrane-cleaning chemical. **D6161**

clarifier, *n*—tank in which precipitate settles and supernatant overflows, a liquid-solids separation unit using gravity to remove solids by sedimentation. **D6161**

AVA Documents
Document Sharing Hub

Full document details: ASTM D1129-24

Clark degree, *n*—number of grains of substance per one British imperial gallon of water expressed CaCO3. Concentration in Clark or English degree is calculated by dividing concentration in calcium carbonate equivalents by 14.3. One grain weighs 1/7000 lb and one imperial gallon of water weighs 10 lbs at 25°C. (See Table 1 of Terminology D6161.) **D6161**

classic gully, *n*—channel that is formed by gully erosion and is not interrupted by mechanical tillage operations to fill the resulting void. Gully depth can exceed 30 m. (See **gully erosion**.) **D4410**

clay size (fluvial sediment), *n*—0.00024 to 0.004 mm in diameter. **D4410**

cleaning-in-place—see **CIP**. **D6161**

clear well, *n*—collection basin that houses filtered or clarified water. **D6161**

Clostridium perfringens, *n—in this test method*, *C. perfringens* is defined as an obligate anaerobic gram-positive, spore forming, nonmotile bacillus, 0.9–1.3 by 3.0–9.0 µm in size that ferments sucrose, ferments lactose with stormy gas production, does not ferment cellobiose, and produces acid phosphatase. *C. perfringens* also produces toxins that cause gas gangrene and gastroenteritis. **D5916**

coagulant, *n*—chemical added in water and wastewater applications to cause destabilization of suspended particles and subsequent formation of flocs that adsorb, entrap, or otherwise bring together suspended matter that is so fine, it is defined as colloidal. Compounds of iron and aluminum are generally used to form flocs to allow removal of turbidity, bacteria, color, and other finely divided matter from water and waste water. **D6161**

coagulation, *n*—agglomeration of colloidal or finely divided suspended matter caused by the addition to the liquid of an appropriate chemical coagulant, by biological processes, or by other means (see also **agglomeration**). **D4410**

coalescing, *v*—separation of mixtures of immiscible fluids (such as oil and water) based on different specific gravities and surface tensions. Coalescence occurs whenever two or more droplets collide and remain in contact and then become larger by passing through a coalescer. The enlarged drops then separate out of solution more rapidly. **D6161**

cobble size (fluvial sediment), *n*—64 to 256 mm in diameter. **D4410**

co-current flow, *n*—flow pattern through a membrane in which the fluids on the upstream and downstream sides of the membrane move parallel to the membrane surface and in the same directions. (See Fig. 1 of Terminology D6161.) **D6161**

chemical oxygen demand (COD), *n*—amount of oxygen required under specified test conditions for the oxidation of water borne organic and inorganic matter. **D6161**

cohesive sediments, *n*—that material whose resistance to initial movement or erosion depends upon the strength of the bond between particles. **D4410**

coliform bacteria, *n*—particular group of bacteria primarily found in human and animal intestines and wastes. **D6161**

coliphage, *n*—bacterial virus capable of plaquing on the wide-range *E. coli* host strain used in this assay. **D6734**

collaborator, *n*—technically competent body (organization or firm, public or private) that undertakes aspects of the manufacture, or characterization, of the (certified) RM on behalf of the RM producer, either on a contractual (as a subcontractor) or voluntary basis. **D6808**

collision cell, *n*—chamber in the ion path between m/z separation elements, or between ion source and the first analyzer, in tandem mass spectrometry in space configurations. **D8421**

collocated samples, *n*—independent samples collected as close as possible to the same point in space and time and intended to be identical. **D5612**

colloid, *n*—substance of very fine particle size, typically between 0.1 and 0.001 µm in diameter suspended in liquid or dispersed in gas. A system of at least two phases, including a continuous liquid plus solid, liquid or gaseous particles so small that they remain in dispersion for a practicable time. **D6161**

colloidal suspension, *n*—any material in suspension (for example, silica) with a nominal particle size less than 100 nm. **D5544**

colloids (fluvial sediment), *n*—smaller than 0.00024 mm in diameter. **D4410**

colluvial deposits, *n*—that material accumulated along valley margins by mass movements from the adjacent hillsides. **D4410**

colony forming unit (CFU), *n*—unit used in the measure of total bacterial count (TBC). **D6161**

colony forming unit, CFU, *n—in microbiology,* a visible mass of cells (algae, bacteria, or fungi) originating from either an individual cell or cluster of cells that have been placed onto or dispersed into a solid or semi-solid nutrient medium and subsequently incubated under prescribed conditions. **D8516**

colored dissolved organic matter (CDOM), *n*—the optically measureable component of dissolved organic matter, also known as chromophoric dissolved organic matter, that strongly absorbs short wavelength light ranging from blue to ultraviolet (UV). **D8431**

combination electrode, *n*—electrochemical apparatus that incorporates an ion-selective electrode and a reference electrode in a single assembly thereby avoiding the need for a separate reference electrode. **IUPAC, D4127**

combined available chlorine—see **CAC**. **D6161**

combined residual chlorine, *n*—residual consisting of chlorine combined with ammonia nitrogen or nitrogenous compounds. **D1253**

compaction, *n*—in crossflow filtration, the result of applied pressure and temperature compressing a polymeric membrane which may result in a decline in flux. **D6161**

AVA Documents
Document Sharing Hub

Full document details: ASTM D1129-24

completely mixed (perfectly mixed) flow, *n*—flow through a membrane module in which fluids on both the upstream and downstream sides of the membrane are individually well mixed. (See Fig. 1 of Terminology D6161.) **D6161**

complexometric titration—see **titration**. **D4127**

composite membrane, *n*—membrane having two or more layers with different physical or chemical properties. Membrane manufactured by forming a thin desalinating barrier layer on a porous carrier membrane. **D6161**

composite sample, *n*—a combination of two or more samples.

composite sample, *n*—sample formed by combining two or more individual samples or representative portions of the samples. **D4410**

composite sample—a series of grab samples integrated into a single sample or a sample collected at specific time intervals and integrated into a single sample. The goal of a composite sample is to characterize a process weighted average in proportion to process parameters. **D3370**

compostable plastic, *n*—plastic that undergoes degradation by biological processes during composting to yield CO2, water, inorganic compounds, and biomass at a rate consistent with other known compostable materials and leave no visible, distinguishable or toxic residue. **D6888**

composting, *v*—managed process that controls the biological decomposition and transformation of biodegradable materials into a humus-like substance called compost: the aerobic mesophilic and thermophilic degradation of organic matter to make compost; the transformation of biologically decomposable material through a controlled process of biooxidation that proceed through mesophilic and thermophilic phases and results in the production of carbon dioxide, water, minerals, and stabilized organic matter (compost or humus). **D6888**

Discussion—Composting uses a natural process to stabilize mixed decomposable organic material recovered from municipal solid waste, yard trimmings, biosolids (digested sewage sludge), certain industrial residues, and commercial residues.

compression rate, *n*—rate at which the air is compressed in the sample container and is a function of the speed at which the sampler is lowered in the sampling vertical. **D6326**

concentrate, *n*—stream exiting a crossflow membrane device that has increased concentration of solutes and particles over the feed stream; portion of the feed stream that does not pass through the membrane. The stream in which dissolved solids or particulates, or both, are concentrated in a membrane separation process. **D6161**

concentrate, *n*—the stream exiting a crossflow membrane device which has increased concentration of solutes and particles over the feed stream; portion of the feed stream which does not pass through the membrane; the stream in which dissolved solids or particulates, or both, are concentrated in a membrane separation process. **D4582**

concentrate recycle, *n*—technique for improving recovery in which a fraction of the concentrate is recycled through the membrane system. **D6161**

concentrate, reject, or brine, *n*—that portion of feed that does not pass through the membrane. **D5089**

concentrate (reverse osmosis), *n*—the residual portion of an aqueous solution applied to a membrane.

concentration, *n*—actual amount of a substance in a given volume of solution. When measuring ionic concentrations by electrode, a distinction is made between the concentration of the free, unbound ion, and total concentration that includes ions bound to complexing agents. **D4127**

concentration factor (CF), *n*—ratio of the concentration of a component in the retenate (concentrate, brine) to the concentration of the same component in the feed: **D6161**

$$CF = \frac{C_B(\text{brinewater concentration})}{C_F(\text{feedwater concentration})} = \frac{1}{1 - \text{concentration}}\ (\text{approximation})$$

concentration of sediment (by mass), *n*—ratio of the mass of dry sediment in a water-sediment mixture to the mass of the mixture. **D4410**

concentration polarization, *n*—increase of the solute concentration over the bulk feed solution that occurs in a thin boundary layer at the feed side of the membrane surface, resulting from the removal of the solvent. Concentration profile that has a higher level of solute nearest to the upstream membrane surface compared with the more-or-less mixed bulk fluid far from the membrane surface. **D6161**

concentration, sediment, *n*—ratio of the mass of dry sediment in a water-sediment mixture to the volume of the water-sediment mixture. Refer to Practice D3977. **D4411**

concentration standard, *n*—standardizing solution whose value is reported in terms of total concentration of the ion of interest. If the electrode is calibrated using pure-concentration standards and measurements made on untreated samples, results must be corrected for the sample ionic strength and the presence of complexing agents. More commonly, a reagent is added to all standards and samples before measurement to fix the ionic strength, thus avoiding the need for correction. **D4127**

concentration (volume), *n*—ratio of the volume of dry sediment to the volume of the water-sediment mixture. **D4410**

concentrator column, *n*—ion exchange column used to concentrate the ions of interest and thereby increase method sensitivity. **D5542**

concentrator column, *n*—ion exchange column used to concentrate the ions of interest and thereby increase method sensitivity. **D5996**

condensation particle counter (CPC), *n*—instrument for detecting very small aerosol particles in a size range from approximately 10 nm to 2 to 3 μm [illegible] cannot

AVA Documents
Document Sharing Hub

Full document details: ASTM D1129-24

differentiate between particles of varying size within this size range; it reports the number of particles with a size greater than that defined by its detection efficiency curve. Detection is independent of particle composition. **D5544**

conductivity, *n*—property of a substance's (in this case, water and dissolved ions) ability to transmit electricity. The inverse of resistivity. Measured by a conductivity meter, and described in microsiemens/cm or micromhos/cm, µS/cm. **D6161**

confirmed identification, *n*—to confirm a tentative identification, both the GC retention time and the mass spectrum of a compound shall uniquely match those of a reference compound as demonstrated by co-injection of the authentic standard with the tentatively identified compound. **D4128**

confluent growth, *n—in Test Method D8516,* plated results observed do not contain isolated bacterial colonies but are observed as continuous bacterial growth covering the entire area of the plate's printed grid. **D8516**

contaminant, *n*—any foreign substance present that will adversely affect performance or quality. **D6161**

contaminated run-off, *n*—rain water that has collected oily contaminants from the surfaces it came in contact with and may appear in the influent to a separator. Unlike a release, the level of contamination in this case is much lower. **D6104**

contaminated run-off, *n*—rain water that has collected oily contaminants from the surfaces it came in contact with and may appear in the influent to a separator. Unlike a release, the level of contamination in this case is much lower. **D6157**

continuing calibration check (CCC) sample, *n*—25 µg of polystyrene (PS) is commonly used as the representative polymer to monitor system performance.

DISCUSSION—A CCC shall be run and analyzed after the analysis of every 20 field samples. This sample is often referred to as a CCC. **D8401**

continuing calibration verification (CCV), *n*—a mid-range calibration standard which checks the continued validity of the initial calibration of the instrument. **D8421**

continuing instrument quality control, *n*—activities conducted to ensure that an instrument continues to respond in the same manner after its calibration. **D7282**

continuous deionization, *n*—deionization process that does not require regular interruptions in service to discharge ionic materials collected from the water being processed. **D6161**

continuous electrodeionization (CEDI) device, *n*—device that removes ionized and ionizable species from liquids using electrically active media and using an electrical potential to influence ion transport in which the ionic transport properties of the active media are a primary sizing parameter. CEDI devices typically comprise semipermeable ion exchange membranes and permanently charged ion exchange media. Examples include continuous deionization, electrodiaresis, and packed-bed or filled-cell electrodialysis. **D6807**

continuous electrodeionization (CEDI) device—a device that removes ionized and ionizable species from liquids using electrically active media and using an electrical potential to influence ion transport, where the ionic transport properties of the active media are a primary sizing parameter. The CEDI devices typically comprise semipermeable ion-exchange membranes and permanently charged ion-exchange media. Examples include continuous deionization, electrodiaresis, and packed-bed or filled-cell electrodialysis. **D6529**

continuous wave system, *n*—electronic positioning system in which the signal transmitted between the transmitter and responder stations travels as a wave having constant frequency and amplitude. **D5906**

contracted weirs, *n*—contractions of thin-plate weirs refer to the widths of weir plate between the notch and the sidewalls of the approach channel. In fully contracted weirs, the ratio of the notch area to the cross-sectional area of the approach channel is small enough for the shape of the channel to have little effect. In suppressed (full-width) rectangular weirs, the contractions are suppressed, and the weir crest extends the full width of the channel. **D5640**

control, *n*—physical properties of a channel that determine the relationship between the stage and discharge of a location in the channel. **D5674**

control analyses, *n*—the determination of specific parameters used as criteria for proper operation of a system.

control block, *n*—group of devices having a common piping and control system. **D6161**

conversion (Y), *n*—product water flow rate divided by feed water flow rate. Also called recovery; given as fraction or decimal. See **recovery**. **D6161**

conversion factors, *n*—see Table 1 of Terminology D6161. **D6161**

conveyance (K), *n*—measure of the carrying capacity of a channel and has dimensions of cubic feet per second or cubic metres per second. Conveyance is computed as follows: **D5130**

$$K = \frac{1.486}{n} AR^{2/3}$$

where:

n = the Manning roughness coefficient,
A = the cross-section area, ft^2 (m^2), and
R = the hydraulic radius, ft (m).
1.486 = 1.00 SI unit

conveyance, (K), *n*—measure of the carrying capacity of a channel cross section, or parts of a cross section, and has units of cubic feet per second or cubic metres per second. Conveyance is computed as follows: **D5129**

$$K = \frac{{}^{*}1.486}{n} AR^{2/3}$$

AVA Documents
Document Sharing Hub

Full document details: ASTM D1129-24

where:

n = the Manning roughness coefficient,
A = the cross-section area, ft^2 (m^2),
R = the hydraulic radius, ft (m), and
*in SI units = 1.0

The following subscripts refer to specific conveyances for parts of a cross section:

K_a, K_b = conveyances of parts of the approach section to either side of the projected bottom width of the contracted section (see Fig. 2 of D5129). K_d is always the smaller of the two,
K_d = conveyance at the upstream end of the dikes,
K_i = conveyance of subsection i,
K_q = conveyance of the part of the approach section corresponding to the projected bottom-width, and
K_T = total conveyance of cross section.

conveyance (K), *n*—measure of the carrying capacity of a channel and having dimensions of cubic feet per second. **D5243**

DISCUSSION—Conveyance is computed as follows:

$$K = \frac{1.486}{n} R^{2/3} A$$

where:

n = the Manning roughness coefficient,
A = the cross section area, in ft^2 (m^2), and
R = the hydraulic radius, in ft (m).
1.486 = 1.00 SI unit

conveyance (K), *n*—measure of the carrying capacity of a channel without regard to slope and has dimensions of cubic feet per second. Conveyance is computed as follows: **D5388**

$$K = \frac{1.49}{n} A R^{2/3}$$

cooling tower water, *n*—water collected from a cooling tower. **D8516**

core, *n*—vertical column of sediment cut from a parent deposit. **D4823**

core catcher, *n*—device (see Fig. 2) that grips and supports the core while the sampler is being pulled from the sediment and hoisted to the water surface. **D4823**

core conveyor, *n*—device (see Fig. 3) for reducing friction between a core and the inside surface of a core barrel. **D4823**

core-barrel liner, *n*—rigid, thin-wall tube mounted inside the barrel of a core sampler. During the core-cutting process, sediment moves up inside the liner. **D4823**

core sampler, *n*—instrument for collecting cores. **D4823**

corrosion, *n*—deterioration of the metal by reaction with its environment. **D4778**

corrosion product sampler, *n*—device used to collect integrated samples of filterable and (as an option) nonfilterable matter. It consists of a flow totalizer that accurately measures the amount of sample passing through the device and a 0.45-µm pore size membrane filter. Adding a second filter for ion exchange resin impregnated membranes allows for collecting nonfilterable matter. **D3891**

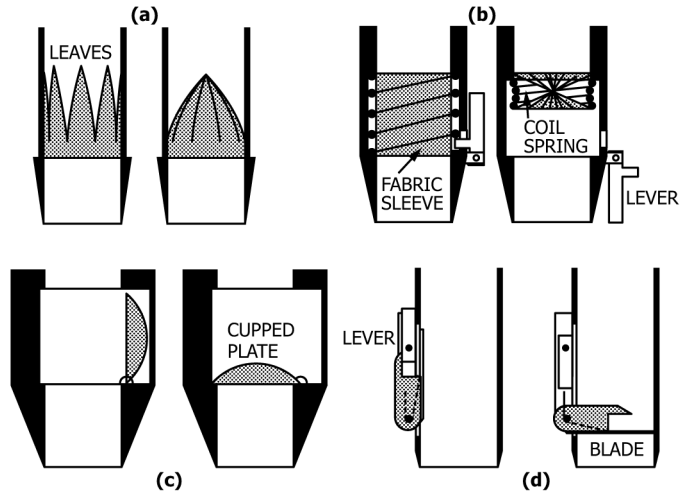

NOTE 1—(*a*) The leaves separate during penetration and then close during retrieval. Strips of gauze can be woven around the leaves to provide additional support. (See Note 2.) (*b*) The lever trips down during retrieval to release the spring and twist the fabric sleeve shut. (See Note 3.) (*c*) The cupped plate drops during retrieval to block the entrance and support the core. (See Note 2.) (*d*) The lever releases the spring-loaded blade which pivots downward to hold the core. (See Note 2.)

NOTE 2—Source: Sachs, P. L., and Raymond, S. O., "A New Unattached Sediment Sampler," *Journal of Marine Research*, Vol 23, 1965, pp. 44–53.

NOTE 3—Source: Bouma, A. H., *Methods for the Study of Sedimentary Structures*, Wiley-Interscience, New York, NY, 1969, pp. 301–378.

FIG. 2 Core Catchers

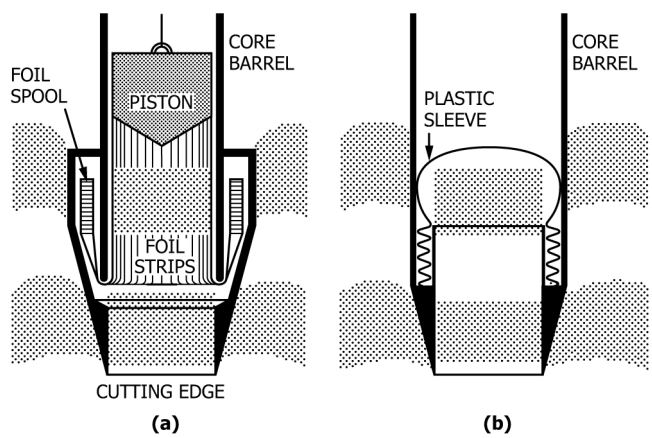

NOTE 1—(*a*) Strips of metal foil slide up through the core barrel as the cutting edge advances downward. (See Note 2.) (*b*) The plastic sleeve unfolds from pleats stored near the cutting edge. This sleeve surrounds the core as the barrel moves down. (See Note 3.)

NOTE 2—Source: Carrigan, P. H., Jr., "Inventory of Radionuclides in Bottom Sediment of the Clinch River Eastern Tennessee," U.S. Geological Survey Professional Paper 433-I, U.S. Government Printing Office, Washington, DC, 1969.

NOTE 3—Source: Sachs, P. L., and Raymond, S. O., "A New Unattached Sediment Sampler," *Journal of Marine Research*, Vol 23, 1965, pp. 44–53.

FIG. 3 Core Conveyors

AVA Documents
Document Sharing Hub

Full document details: ASTM D1129-24

corrosion products, *n*—products that result from chemical or electrochemical reaction between a metal and its environment.

corrosion products, *n*—products that result from chemical or electrochemical reaction between a metal and its environment. **D6161**

corrosion products—a result of chemical or electrochemical reaction between a metal and its environment. **D887**

cosine response, *n*—ability of a meter, placed at an angle to the oncoming flow, to sense the component of velocity parallel to its axis. **D5089**

counter background, *n*—in the measurement of radioactivity, the counting rate resulting from factors other than the radioactivity of the sample and reagents used. **D1890**

DISCUSSION—Counter background varies with the location, shielding of the detector, and the electronics; it includes cosmic rays, contaminating radioactivity and electrical noise.

counter beta-particle efficiency, *n*—in the measurement of radioactivity, that fraction of beta particles emitted by a source which is detected by the counter. **D1890**

counter-current flow, *n*—flow through a membrane module in which the fluid on the upstream and downstream sides of the membrane move parallel to the membrane surface but in the opposite direction. (See Fig. 1 of Terminology D6161.) **D6161**

counter efficiency, *n*—in the measurement of radioactivity, that fraction of the disintegrations occurring in a source which is detected by the counter. **D1890**

crest, *n*—bottom of the overflow section or notch of a rectangular weir. **D5242**

crest, *n*—horizontal plane surface of the weir. **D5614**

crest, *n*—in rectangular thin-plate weirs, the horizontal bottom of the overflow section; in broad-crested weirs and flumes, the plane, level floor of the flow section. **D5640**

criterion of detection, *n*—minimum quantity that shall be observed before it can be stated that a substance has been discerned with an acceptable probability that the statement is true (see Practice D4210). **D4841**

critical flow, *n*—open channel flow in which the energy, expressed in terms of depth plus velocity head, is a minimum for a given flow rate and channel. The Froude number is unity at critical flow. **D5614, D4410**

critical flow, *n*—open channel flow in which the energy expressed in terms of depth plus velocity head, is a minimum for a given flowrate and channel. The Froude number is unity at critical flow. **D5390**

critical flow, *n*—open channel flow in which the energy, expressed in terms of depth plus velocity head, is a minimum for a given flow rate and channel. The Froude number is unity at critical flow. **D5614**

critical flow, *n*—open-channel flow in which the energy, expressed in terms of depth plus velocity head, is a minimum for a given flow rate and channel. **D5640**

DISCUSSION—The Froude number is unity at critical flow.

critical level, *n*—with a specified level of confidence (for example, 95 % or 99 %), the lowest result that indicates the presence of an analyte.

DISCUSSION—Specifically, the lowest result that is statistically different from zero. This term originates with the publications of Lloyd Currie (Anal. Chem. 40 (1968) 586; ISO 11843–1:1997). A critical level is dependent on the analyte of interest, the analytical method, and the matrix. The U.S. Environmental Protection Agency's Method Detection Limit (MDL) (Federal Register 40 CFR, Part 136, Appendix B, 7–1–99 edition) is an example of a critical level.

cross flow, *n*—flow through a membrane module in which the fluid on the upstream side of the membrane moves parallel to the membrane surface and the fluid on the downstream side of the membrane moves away from the membrane in the direction normal to the membrane surface. (See Fig. 1 of Terminology D6161.) **D6161**

crossflow membrane filtration, *n*—separation of the components of a fluid by semipermeable membranes through the application of pressure and flow parallel to the membrane surface. Includes the processes of reverse osmosis, utrafiltration, anofiltration, and microfiltration. **D6161**

cross-section area (A), *n*—area of the water below the high-water surface elevations that are computed by assuming a straight-line interpolation between elevations on each bank. The area is computed as the summation of the products of mean depth multiplied by the width between stations of the cross section. **D5130**

cross-section area (A), *n*—area at the water below the water-surface elevation that it computed. The area is computed as the summation of the products of mean depth multiplied by the width between stations of the cross section. **D5388**

cross sectional area (A), *n*—area occupied by the water. **D5243**

cross sections (numbered consecutively in downstream order), *n*—representative of a reach of channel and are positioned as nearly as possible at right angles to the direction of flow. They must be defined by coordinates of horizontal distance and ground elevation. Sufficient ground points must be obtained so that straight-line connection of the coordinates will adequately describe the cross-section geometry. If major breaks in the high-water profile are evident, cross sections should be located at the breaks. **D5130**

cross sections (numbered consecutively in down-stream order), *n*—The approach section, Section 1, is located one culvert width upstream from the culvert entrance. Cross Sections 2 and 3 are located at the culvert entrance and the culvert outlet, respectively. Subscripts are used with symbols that represent cross sectional properties to indicate the section to which the property applies. For example, A_1 is the area of Section 1. Items that apply to a reach between two

AVA Documents
Document Sharing Hub

Full document details: ASTM D1129-24

sections are identified by subscripts indicating both sections. For example, h_{f1-2} is the friction loss between Sections 1 and 2. **D5243**

cross sections (numbered consecutively in downstream order), *n*—representative of a reach and channel and are positioned as nearly as possible at right angles to the direction of flow. They must be defined by coordinates of horizontal distance and ground elevation. Sufficient ground points must be obtained so that straight-line connection of the coordinates will adequately describe the cross-section geometry. **D5388**

crud deposition, *n*—deposition on interior surfaces of sample tubing or other hardware of fine insoluble particles of iron oxides and other byproducts of metallic corrosion that are present throughout the system. The term "crud" is generally used for all types of fouling. **D5540**

cryo-trap, *n*—device also known as a "cold-trap" frequently attached to a pyrolysis-gas chromatography/mass spectrometry (Py-GC/MS) unit located at the column inlet and uses temperature to narrow the initial bandwidths of the sample vapors.

DISCUSSION—While cryo-trapping is commonly used with sample introduction devices such as thermal desorption units that slowly introduce volatile compounds to a GC or GC/MS, it is not needed or recommended for this test method because of the high speed in which the polymer sample is introduced into the column. **D8401**

cryptosporidium, *n*—waterborne protozoan that forms cysts and causes acute gastrointestinal illness in humans. **D6161**

crystal membrane or solid-state electrode membrane—see **membrane**. **D4127**

culturable, *adj—in Test Method D8516,* any aerobic bacteria able to form colonies on solid media. **D8516**

current efficiency, *n*—ratio, expressed in percent, of the net transfer of ionized and ionizable solutes per unit cell within a CEDI device, expressed in chemical equivalents transferred per unit time, to the number of coulombs transferred from an external DC power source to each electrode pair, expressed in faradays per unit time. Calculation of current efficiency is described in 9.2 of Test Method D6807. **D6807**

current efficiency—the ratio, expressed in percent, of the net transfer of ionized and ionizable solutes per unit cell within a CEDI device, expressed in chemical equivalents transferred per unit time, to the number of coulombs transferred from an external dc power source to each electrode pair, expressed in faradays per unit time. Calculation of current efficiency is described in 9.2. **D6529**

current meter, *n*—instrument used to measure, at a point, velocity of flowing water. **D3858**

current meter, *n*—instrument used to measure the speed or velocity of flowing water at a point. **D4409**

custody, *n*—physical possession or control. A sample is under custody if it is in possession or under control so as to prevent tampering or alteration of its characteristics. **D4840**

cycle time, *n*—interval between repetitive sample introductions in a monitoring system with discrete sampling. **D3864**

Dalton, *n*—arbitrary unit of molecular weight, one twelfth the mass of the nuclide of carbon 12. **D6161**

data acquisition equipment, *n*—see **monitoring system**. **D3864**

data defensibility, *n*—process that provides sufficient assurance, both legal and technical, that assertions made about a sample and its measurable characteristics can be supported to an acceptable level of certainty. See Appendix X1 of Guide D4840 for a discussion of the elements of a data defensibility process. **D4840**

data quality objectives (DQOs), *n*—statements on the level of uncertainty that a decision maker is willing to accept in the results derived from environmental data (see QAMS-500/80). **D5612**

data traceability, *n*—the ability to verify data by having access to, and documentation of, all prior information used to generate it and needed for its interpretation.

datum, *n*—plane that represents a zero or some defined elevation. **D5413**

datum, *n*—level plane that represents zero elevation. **D5674**

dead end filtration, *n*—process in which water is forced through a media which captures the retained particles on and within it, where the process involves one influent and one effluent stream. **D6161**

dead end flow, *n*—flow through a membrane module in which the only outlet for the upstream fluid is through the membrane. (See Fig. 1 of Terminology D6161.) **D6161**

deaerator, *n*—device to remove air from water. **D6161**

debris, *n*—as applied to geologic debris flows, a mixture of loose, poorly-sorted rock fragments or soil material, or both, potentially ranging from clay to boulder-size particles that may include fragmental organic matter and other exotic detritus. **D4410**

decarbonator, *n*—device to remove carbon dioxide from water. **D6161**

degasification, *n*—process of removing dissolved gasses from water. **D6161**

degradable plastic, *n*—plastic designed to undergo a significant change in its chemical structure under specific environmental conditions, resulting in a loss of some properties that may be measured by standard test methods appropriate to the plastic and the application in a period of time that determines its classification. **D6888**

degradation, *n*—geologic process by which stream beds, flood plains, the bottoms of other water bodies, and other land surfaces are lowered in elevation by the removal of material by fluids. **D4410**

AVA Documents
Document Sharing Hub

Full document details: ASTM D1129-24

deionization (DI), *n*—removal of ions from a solution by ion exchange. **D6161**

delivery rate, *n*—use **sediment delivery ratio** or sediment yield, whichever is meant. **D4410**

delta, *n*—sediment deposit formed where moving water is slowed by a slower moving body of water. **D4410**

demineralization, *n*—process of removing minerals from water. **D6161**

denitrification, *n*—aqueous nitrate reduction or removal. **D6161**

dense (nonporous) membrane, *n*—membrane with no detectable pores. **D6161**

density, *n*—mass of a substance per unit volume, ρ in kg/L or kg/m^3. Use ρ_s for density of solid particles, ρ_w for water, ρ_d for dry sediment with voids, ρ_{sat} for saturated sediment, ρ_{wet} for wet sediment, and ρ_b for submerged sediment (buoyant weight). **D4410**

density current, *n*—movement of one fluid under, through, or over another fluid of differing density. **D4410**

dental water, *n*—water that comes from dental devices or waterlines of a dental unit providing a water source for dental procedures. **D8516**

deposition, *n*—the chemical, mechanical, or biological processes through which sediments accumulate in a resting place. **D4410**

depth (y), *n*—depth of flow at a cross section. Subscripts denote specific cross section depths as follows: **D5129**

y_1 = depth of flow in cross section 1 (approach section), and
y_3 = depth of flow in cross section 3 (contracted section).

depth-integrated sample, *n*—discharge-weighted (velocity-weighted) sample of water-sediment mixture collected at one or more verticals in accordance with the technique of depth integration; the discharge of any property of the sample expressible as a concentration can be obtained as the product of the concentration and the water discharge represented by the sample. **D4410**

depth-integrated sample, *n*—water sample collected in such a manner as to be representative of the water mixture moving in the river in the vicinity of the sampler at a single vertical in a cross section. **D5613**

depth-integrating sediment sampler, *n*—device that collects a representative water-sediment mixture at all points along the sampling vertical. **D4410**

depth-integrating suspended sediment sampler, *n*—instrument capable of collecting a water-sediment mixture isokinetically as the instrument is traversed across the flow; hence, a sampler suitable for performing depth integration. **D4411**

depth integration, *n*—method of sampling at every point throughout a given depth (the sampled depth) whereby the water-sediment mixture is collected isokinetically so that the contribution from each point is proportional to the stream velocity at the point. This process yields a sample with properties that are discharge weighted over the sampled depth. Ordinarily, depth integration is performed by traversing either a depth- or point-integrating sampler vertically at an acceptably slow and constant rate; however, depth integration can also be accomplished with vertical slot samplers. **D4410**

depth-integration, *n*—method of sampling at every point throughout a sampled depth whereby the water-sediment mixture is collected isokinetically to ensure the contribution from each point is proportional to the stream velocity at the point. This method yields a sample that is discharge-weighted over the sampled depth. Ordinarily, depth integration is performed by traversing either a depth- or point-integrating sampler vertically at an acceptably slow and constant rate; however, depth integration can also be accomplished with vertical slot samplers. **D4411**

desalination, *n*—see **demineralization**. **D6161**

desorption, *n*—opposite of absorption. See **absorption**. **D6161**

detection efficiency, *n*—in this test method, detection efficiency represents a curve relating particle size to a counter's ability to detect that size. **D5544**

detection limit, *n*—function of the sensitivity and the signal to noise ratio in the analysis of a specific element for a given set of parameters. The detection limit is determined statistically as some multiple, usually two or three times the standard deviation of the signal to noise ratio. **D4691**

detection limit, *n*—minimum concentration or amount of a substance that can be detected with a known degree of confidence. **D5847**

detection limit (DL) or limit of detection (LD), *n*—numerical value, expressed in physical units or proportion, intended to represent the lowest level of reliable detection (a level which can be discriminated from zero with high probability while simultaneously allowing high probability of nondetection when blank samples are measured. **D6091**

Discussion—In some cases, the discrimination may be from a value other than zero, such as a background level. Note also that a DL also depends on other characteristics of the measurement and detection process, such as described in 1.3.2 of Practice D6091. The IDE is an example of a DL.

detection verification level, DVL, *n*—a concentration that has a signal/noise (S/N) ratio greater than 3:1 and is at least 3 times below the Reporting Limit (RL). **D7644** **D7645**

detector background, *n*—*in the measurement of radioactivity*, the counting rate resulting from factors other than the radioactivity of the sample and reagents used.

Discussion—Detector background varies with the location, shielding of the detector, and the electronics; it includes cosmic rays, contaminating radioactivity, and electronic noise. **D7283**

AVA Documents
Document Sharing Hub

Full document details: ASTM D1129-24

detergent, *n*—cleansing agent; any of numerous synthetic water soluble or liquid-organic preparations that are chemically different from soaps but resemble them in the ability to emulsify oils and hold dirt in suspension. **D6161**

device pressure drop (ΔP), *n*—difference between the feed pressure and the concentrate pressure. **D5090**

dialysis, *n*—separation process dependent on different diffusion rates of solutes across a permeable membrane without an applied hydraulic driving force. It is a process in which transport is driven primarily by concentration differences, rather than by pressure or electrical potential differences, across the thickness of a membrane. **D6161**

dialysis permeability coefficient, *n*—permeability coefficient on a transmembrane driving force expressed in terms of the concentration difference of a given component. **D6161**

diameter, intermediate axis, *n*—diameter of a sediment particle determined by direct measurement of the axis normal to a plane containing the longest and shortest axes. **D5387**

diameter, nominal, *n*—diameter of a sphere of the same volume as the given particle.[6] **D5387**

diameter, sedimentation, *n*—diameter of a hypothetical sphere of the same specific gravity and the same settling velocity as the given particle in the same fluid. **D4410**

diameter, sieve, *n*—size of sieve opening through which a given particle of sediment will just pass. **D5387**

diatom, *n*—single cell marine animal having a coating consisting principally of silica. **D6161**

diatomaceous earth (DE) filtration, *n*—filtration using an amphorous, lightweight siliceous earth medium occurring naturally as the fossil remains of diatoms. **D6161**

differential pressure (ΔP, dP), *n*—difference in pressure between two points. **D6161**

differential titration, *n*—see **titration**. **D4127**

diffusion screen, *n*—fine mesh screen used to filter residue particles of a particular size. **D5544**

diffusion-type probes, *n*—galvanic or polarographic sensors that depend on the continuous influx of oxygen through the membrane to develop the measurement signal. **D5462**

digestion, *n*—treating a sample with the use of heat or elevated pressures, or both, usually in the presence of chemical additives, to bring analytes of interest into solution or to remove interfering matrix components, or both. **D1971**

direct measurement, *n*—determination of sample concentration or activity by directly relating the electrode potential to the level of the species being measured. The level can be read from a calibration curve or the log scale of a selective ion meter. **D4127**

direct-measuring bed-load sampler, *n*—device that physically collects and holds bed load. **D4410**

discharge, *n*—rate of flow expressed in units of volume of water per unit of time. The discharge includes any sediment or other materials that may be dissolved or mixed with it. **D5389**

discharge, *n*—volume of flow of water through a cross section in a unit of time, including any sediment or other solids that may be dissolved in or mixed with the water. **D3858**

discharge, *n*—volume of water flowing through a cross-section in a unit of time, including sediment or other solids that may be dissolved in or mixed with the water; usually cubic feet per second (f^3/s) or metres per second (m/s). **D5674**

discharge (water), *n*—volume of water flowing through a cross-section in a unit of time, including sediment or other solids that may be dissolved in or mixed with the water; usually cubic feet per second (f^3/s), or cubic metres per second (m^3/s). **D5674, D4410**

discrete analyzer, *n*—a programmable, computer-controlled instrument that automates wet-chemical analysis by using one or more robotic arms interfaced to high-precision volumetric dispensers to aspirate and dispense samples, standards, diluents, and reagents. **D7781**

disinfection, *n*—process of killing organisms in a water supply or distribution system by means of heat, chemicals, or UV light. **D6161**

disinfection by-product, *n*—see **DBP**. **D6161**

dispersed system, *n*—in laboratory analysis of grain sizes, an initial condition whereby the particles begin to settle from a stirred mixture; when stirring stops, each particle settles independently of other particles. **D4410**

dispersion, *n*—three-dimensional process of disseminating the dye within a river's waters. **D5613**

dispersion, *n*—variation of index of refraction with wavelength. **D1245**

dispersion staining, *n*—the color effects produced when a transparent object, immersed in a liquid having a refractive index near that of the object is viewed under the microscope by a transmitted light and precise-aperture control.

dispersion staining, *n*—color effects produced when a transparent object, immersed in a liquid having a refractive index near that of the object is viewed under the microscope by transmitted white light and precise aperture control. **D1245**

dissociation constant, *n*—number indicating the extent to which a substance dissociates in solution. [For a simple two-species complex AB, the constant is given by the product of the molar concentrations of A and of B divided by the molar concentrations of the undissociated species AB. For example, with hydrofluoric acid:

$$([H^+][F^-])/([HF]) = K = 6.7 \times 10^{-4} \text{ at } 25°\text{C}$$

The smaller the value of K, the less the complex is dissociated. K varies with temperature, ionic strength, and the

[6] Vanoni, V. A., "Sedimentation Engineering," *Manuals and Reports on Engineering Practice*, No. 54, ASCE, 1975.

AVA Documents
Document Sharing Hub

Full document details: ASTM D1129-24

nature of the solvent. **D4127**

dissolved, *adj*—concentration of elements determined on a filtered fraction of a sample. Samples are filtered through a 0.45-µm membrane filter before acid preservation. **D6800**

dissolved, *adj*—concentration of elements determined on a filtered fraction of a sample. Samples are filtered through a 0.45-µm membrane filter before acid preservation.

dissolved, *adj*—those elements that will pass through a 0.45-µm membrane filter. **D1976**

dissolved, *adj*—those elements that will pass through a 0.45-µm membrane filter. **D5673**

dissolved inorganic nitrogen (DIN), *n*—nitrogen in the form of ammonium, nitrate ion, or nitrite ion determined in a filtered sample. **D8083**

dissolved load, *n*—part of the stream load that is carried as dissolved solids. **D4410**

dissolved matter, *n*—that matter, exclusive of gases, which is dispersed in water to give a single homogeneous liquid phase.

dissolved nitrogen (DN), *n*—nitrogen determined in a filtered sample. **D8083**

dissolved organic nitrogen (DON), *n*—organic nitrogen determined in a filtered sample. **D8083**

dissolved solids, *n*—mass of constituents in a filtered water sample. For operational purposes, the filter pore is usually 0.00045 mm. **D4410**

dissolved solids, *n*—residual material remaining after filtering the suspended material from a solution and evaporating the solution to a dry state at a specified temperature. That matter, exclusive of gases, which is dissolved in water to give a single homogeneous liquid phase. **D6161**

dissolved solids, *n*—soluble constituents in water. The quantity is determined by evaporating a water sample to visible dryness at a temperature slightly below boiling. The temperature is then raised to 105°C and held for about 2 h. This is followed by cooling in a desiccator and weighing the residue. **D3977**

distillation, *n*—process of condensing steam from boiling water on a cool surface. **D6161**

distillation ratio, % =

$$\frac{\text{volume of distilled portion of sample}}{\text{total volume of acidified sample}} \times 100$$

D4374

Donnan exclusion, *n*—reduction in concentration of mobile ions within an ion exchange membrane as a result of the presence of fixed ions of the same sign as the mobile ions. **D6161**

downstream, *n*—side of a membrane from which permeate emerges. **D6161**

draft (transducer draft), *n*—vertical distance from the bottom of the transducer to the surface of the water. **D6318**

drainage basin, *n*—see **watershed**. **D4410**

drift, *n*—slow nonrandom change with time in the potential (emf) of an ion-selective electrode cell assembly maintained in a solution of constant composition and temperature. **IUPAC, D4127**

drift, *n*—change in system output, with constant input over a stated time period of unadjusted, continuous operation; usually expressed as percentage of full scale over a 24-h period. **D3864**

span drift, n—drift when the input is at a constant, stated upscale value. **D3864**

zero drift, n—drift when the input is at zero. **D3864**

drinking water, *n*—water that meets regulatory requirements or standards for human consumption. **D8516**

dunes (stream), *n*—bed forms of coarse sediment, generally transverse to the direction of flow, with a triangular profile having a gentle upstream slope. Dunes advance downstream by the movement of sediment along the upstream slope and by the deposition of sediment on the steep downstream slope. Dunes move downstream at low velocities compared to the stream flow velocity. **D4410**

duplicate sample, *n*—one of two (2) representative portions taken from the same sample or sample source.

D_x, *n*—diameter of the sediment particle that has *x* % of the sample less than this size (diameter is determined by method of analysis; that is, sedimentation, size, nominal, and so forth). **D5387**

DISCUSSION—Example: D_{45} is the diameter that has 45 % of the particles that have diameters finer than the specified diameter. The percent may be by mass, volume, or numbers and is determined from a particle size distribution analysis.

dynamic membrane formation, *n*—process in which an active layer is formed on the membrane surface by the deposition of substances contained in the fluid being treated. **D6161**

dynamic solvent system, *n*—any closed loop system in which the solvent is in motion across the deposit surface. **D5256**

EasyDisc PCA, *n*—method used for the quantification of culturable, waterborne bacteria in drinking water, bottled water, and cooling tower water.[7,8]

DISCUSSION—The CFU data generated by this test method correlate with the pour plate method using plate count agar (PCA) incubated at 35 °C for 48 h as described in Method 9215 (see 2.3 in Test Method D8516). **D8516**

[7] EasyDisc is a registered trademark of IDEXX Laboratories, Inc.

[8] The sole source of supply of the apparatus known to the committee at this time is IDEXX Laboratories, Inc., One IDEXX Drive, Westbrook, ME, 04092, USA. If you are aware of alternative suppliers, please provide this information to ASTM International Headquarters. Your comments will receive careful consideration at a meeting of the responsible technical committee,[1] which you [illegible]

AVA Documents
Document Sharing Hub

Full document details: ASTM D1129-24

EasyDisc R2A, *n*—method used for the quantification of culturable, waterborne bacteria in drinking water, bottled water, and dental water.[7,8]

DISCUSSION—The CFU data generated by this method correlate with the pour plate method using Reasoners 2 Agar (R2A) incubated at 20 °C to 28 °C for five to seven days as described in Method 9215 (see 2.3 in Test Method D8516). **D8516**

EasyDisc YEA, *n*—method used for the quantification of culturable, waterborne bacteria in drinking water. [7,8]

DISCUSSION—The CFU data generated by this method correlate with the pour plate method using yeast extract agar incubated at 22 °C for 68 h and 36 °C for 44 h as described in ISO 6222.

eccentricity (e), *n*—measure of the symmetry of the contraction in relation to the approach channel. **D5129**

***E. coli*,** *n*—one of the members of the coliform bacterium associated with animal and human waste. **D6161**

effluent, *n*—aqueous release from a separator. **D6104**

effluent, *n*—aqueous release from a separator. **D6157**

effluent, *n*—exit stream from a unit/vessel. **D6161**

effluent, *n*—any stage of treated wastewater. **D8401**

electrical conductivity, *n*—reciprocal of the a-c resistance in ohms measured between opposite faces of a centimetre cube of an aqueous solution at a specified temperature. **D1125**

DISCUSSION—The unit of electrical conductivity is siemens per centimetre. (The previously used units of mhos/cm are numerically equivalent to S/cm.) The actual resistance of the cell, R_x, is measured in ohms. The conductance, $1/R_x$, is directly proportional to the cross-sectional area, A (in cm 2), and inversely proportional to the length of the path, L (in cm):

$$1/R_x = K \cdot A/L$$

The conductance measured between opposite faces of a centimetre cube, K, is called conductivity. Conductivity values are usually expressed in microsiemens/centimetre or in siemens/centimetre at a specified temperature, normally 25°C.

electrical conductivity, *n*—the reciprocal of the resistance in ohms measured between opposite faces of a centimetre cube of an aqueous solution at a specified temperature.

electrical conductivity, *n*—refer to Test Methods D1125. **D5391**

electrical resistivity, *n*—a-c resistance in ohms measured between opposite faces of a centimetre cube of an aqueous solution at a specified temperature. **D1125**

DISCUSSION—The unit of electrical resistivity is ohm-centimetre. The actual resistance of the cell, R_x, is measured in ohms, and is directly proportional to the length of the path, L (in cm), and inversely proportional to the cross-sectional area, A (in cm^2):

$$R_x = R \cdot L/A$$

The resistance measured between opposite faces of a centimetre cube, R, is called resistivity. Resistivity values are usually expressed in ohm·centimetre, or in megohm · centimetre, at a specified temperature, normally 25°C.

electrical resistivity, *n*—refer to Test Methods D1125. **D5391**

electrodeionization—a process that removes ionized and ionizable species from liquids using electrically active media and using an electrical potential to influence ion transport, where the ionic transport properties of the active media are a primary sizing parameter. Electrodeionization devices typically comprise semi-permeable ion-exchange membranes and permanently charged ion-exchange media (see Test Method D6529). **D1193**

electrode life, *n*—length of time that an electrode functions usefully. Life-time of solid-state and glass electrodes is limited by mechanical failure of the electrode body or chemical attack on the sensing membrane, and can range from a few days, if the electrode is used continuously in hot or abrasive flowing streams, to several years under normal laboratory conditions. The life-time of liquid membrane electrodes is limited by loss of ion exchanger with use, and is generally one to six months. **D4127**

electrode pair, *n*—sensing electrode and a reference electrode; the reference electrode may be separate or combined in one body with the sensing electrode. **D4127**

electrodialysis (ED), *n*—process in which ions are transferred through membranes from a less concentrated to a more concentrated solution using direct current electric power as the driving force. **D6161**

electrodialysis reversal (EDR), *n*—same as ED with the addition of a polarity reversal step added to improve performance. **D6161**

electrolyte, *n*—combination of a UV-absorbing salt and an electroosmotic flow modifier placed inside the capillary, used as a carrier for the analytes, and for detection and quantitation. The UV-absorbing portion of the salt must be anionic and have an electrophoretic mobility similar to the analyte anions of interest. **D6508**

electrolyte, *n*—substance that ionizes in aqueous solution; also, a solution containing ions. Weak electrolytes are only slightly dissociated into ions in solution (acetic acid), and strong electrolytes are highly dissociated (HCl, NaCl). **D4127**

electronic distance measurement (EDM), *n*—measurement of distance using pulsing or phase comparison systems. **D5906**

electronic positioning system (EPS), *n*—system that receives two or more EDM to obtain a position. **D5906**

electronic temperature sensor, *n*—electrical device that converts changes in resistance to a readout calibrated in temperature units. Thermistors and resistance temperature detectors are examples of electronic temperature sensors. **D6764**

electroosmotic flow (EOF), *n*—direction and velocity of electrolyte solution flow within the capillary under an applied electrical potential (voltage); the velocity and direction of flow is determined by electrolyte chemistry, capillary wall chemistry, and applied voltage. **D6508**

electroosmotic flow modifier (OFM), *n*—cationic quaternary amine in the electrolyte that dynamically coats the negatively charged silica wall giving it a net positive charge. This

AVA Documents
Document Sharing Hub

Full document details: ASTM D1129-24

reverses the direction of the electrolyte's natural electroosmotic flow and directs it towards the anode and detector. This modifier augments anion migration and enhances speed of analysis. Its concentration secondarily effects anion selectivity and resolution (see Fig. 7 of Test Method D6508). **D6508**

electropherogram, *n*—graphical presentation of UV-detector response versus time of analysis; the *x* axis is migration time, which is used to qualitatively identify the anion, and the *y* axis is UV response, which can be converted to time corrected peak area for quantitation. **D6508**

electrophoretic mobility, *n*—specific velocity of a charged analyte in the electrolyte under specific electroosmotic flow conditions. The mobility of an analyte is directly related to the analyte's equivalent ionic conductance and applied voltage, and is the primary mechanism of separation. **D6508**

element, *n*—component containing the membrane, generally replaceable, such as a spiral wound cartridge or cassette. **D6161**

elevation, *n*—vertical distance from a datum to a point. **D5413**

elevation, *n*—vertical distance from a datum to a point; also termed stage or gage height. **D5674**

eluant, *n*—ionic mobile phase used to transport the sample through the analytical column. **D5996**

eluant, *n*—ionic mobile phase used to transport the sample through the exchange column. **D5542**

eluant, *n*—ionic mobile phase used to transport the sample through the ion exchange column. **D5257**

eluent, *n*—ionic mobile phase used to transport the sample through the chromatographic system. **D6581**

eluent, *n*—ionic mobile phase used to transport the sample through the system. **D4327**

eluent, *n*—liquid mobile phase used in anion exchange chromatography to transport the sample through the chromatography system. **D6994**

embrittlement cracking—a form of metal failure that occurs in steam boilers at riveted joints and at tube ends, the cracking being predominantly intercrystalline. **D807**

emission intensity, *n*—measure of the amplitude of fluorescence emitted by a sample element. This measurement is correlated with a calibration curve for quantitative analysis. The emission intensity generally is given in units of counts per second (c/s). **D6502**

endotoxins, *n*—substances or by-products usually produced by gram negative micro-organisms that give a positive test for endotoxin in accordance with 13.2 of Guide D5196. **D5196**

endotoxins, *n*—substances or by-products usually produced by gram negative microorganisms that give a positive test for pyrogens, determined in accordance with the limulus lysate test. **D5127**

energy loss (h_f), *n*—loss as a result of boundary friction between two locations. **D5243**

DISCUSSION—Energy loss is computed as follows:

$$h_f = L\left(\frac{Q^2}{K_1 K_2}\right)$$

where:

Q = the discharge in ft^3/s (m^3/s), and
L = the culvert length in ft (m).

energy recovery device—see **ERD**. **D6161**

energy recovery turbine—see **ERT**. **D6161**

enhanced surface water treatment rule—see **ESWTR**. **D6161**

enteric virus, *n*—general term denoting a virus that normally enters by the oral route, is capable of multiplying in cells of the alimentary canal and is found in stool specimens. In addition to the enterovirus, included under this general term are such agents as adenovirus, rotavirus, Norwalk virus, astrovirus, and calicivirus. **D5244**

English degree, *n*—number of grains of substance per one British imperial gallon of water. (See Table 1 of Terminology D6161.) **D6161**

enterococci, *n*—gram positive bacteria possessing the enzyme β-D-glucosidase, which cleaves the nutrient indicator and produces fluorescence under a long wave length (365 nm to 366 nm) ultraviolet (UV) light. **D6503**

Enterococcus, *n*—in this test method, *Enterococcus* species are those bacteria that produce red to maroon colonies with black or reddish-brown precipitate on underside, after incubation on mE agar and subsequent transfer to EIA medium.

DISCUSSION—Enterococci include *E. faecalis*, *E. faecium*, *E. avium*, and their variants. **D5259**

enterovirus, *n*—genus of the family *Picornaviridae*. Members of this genus are 22 to 30 nm in diameter, contain a positive single-stranded RNA, are stable under acid conditions and are resistant to ether. Included in this genus are poliovirus, coxsackievirus, and echovirus. **D5244**

Environmental Protection Agency (EPA) (USA), *n*—see **EPA-Environmental Protection Agency (USA)**. **D6161**

ephemeral gully, *n*—channel that is formed by gully erosion on cropland and that is routinely but temporarily obscured by mechanical operations such as tilling. **D4410**

equal-discharge-increment (EDI) method, *n*—procedure for obtaining the discharge weighted suspended-sediment concentration of flow at a cross section whereby depth integration is performed at the centers of three or more equal flow segments of the cross section. If approximately equal volumes of water-sediment mixture are collected from each flow segment, the samples may be composited for analysis. If unequal volumes are collected, samples from each flow segment must be analyzed separately and the results combined mathematically. **D4410**

AVA Documents
Document Sharing Hub

Full document details: ASTM D1129-24

equal-width-increment (EWI) method, *n*—procedure of obtaining the discharge weighted suspended-sediment concentration of flow at a cross section by performing depth integration at a series of verticals equally spaced across the cross section and using the same vertical transit rate at all sampling verticals. **D4410**

equilibrium-type probes, *n*—modified polarographic sensing probes that have a negligible influx of oxygen through the membrane except during changes of sample DO concentration. Oxygen consumption and regeneration balance each other within the probes under stable conditions, and the net flux through the membrane is insignificant. **D5462**

equitransference, *n*—equal diffusion rates of the positively and negatively charged ions of an electrolyte across a liquid junction. **D4127**

equitransferent filling solution, *n*—reference electrode-filling solution in which the diffusion rates of negatively and positively charged ions are equal. **D4127**

equivalent diameter, *n*—diameter of a pore or defect calculated from its bubble point using Eq 1 (see 9.3 of Practice D6908). This is not necessarily the same as the physical dimensions of the defect(s). **D6908**

equivalent parts per million (epm), *n*—unit chemical equivalent weight of solute per million unit weights of solution. **D8192**

equivalent per million (epm), *n*—a unit chemical equivalent weight of solute per million unit weights of solution.

equivalent per million (epm), *n*—unit chemical equivalent weight of solute per million unit weights of solution. **D1126**

equivalent per million (EPM), *n*—unit chemical equivalent weight of solute per million unit weights of solution. Concentration in equivalents per million is calculated by dividing concentration in ppm by the equivalent weight of the substance or ion. Equivalent weight is the atomic weight of the substance divided by the valence of the substance. **D6161**

equivalent weight, *n*—weight of an ion determined by dividing the sum of the atomic weights of its component atoms by its valence. **D6161**

Escherichia colia, *n*—see ***E. coli***. **D6161**

***Escherichia coli* (*E. coli*),** *n*—species of bacteria that is a member of the total coliform group and known to originate in the feces of warm-blooded animals. **D5392**

evaluate, *v*—to determine significance or worth. **D5851**

evaporation, *n*—process in which a liquid (water) passes from a liquid to a gaseous state. **D6161**

excitation source, *n*—component of the XRF spectrometer, which provides the high energy radiation used to excite the elemental constituents of a sample leading to the subsequent fluorescence which is measured. The excitation source may be an electronic X-ray generating tube or one of a variety of radioisotopes which emit an X-ray line of a suitable energy for the analysis at hand. **D6502**

expansion or contraction loss (ho), *n*—in the reach is computed by multiplying the change in velocity head through the reach by a coefficient. For an expanding reach: **D5388**

$$ho = Ke(h_{v1} - h_{v2})$$

$$ho = Kc(h_{v2} - h_{v1})$$

where:

h_v = velocity head at the respective section, and
Ke and Kc = coefficients.

Discussion—The values of the coefficients can range from zero for ideal transitions to 1.0 for *Ke* and 0.5 for *Kc* for abrupt changes.

expiration date, *n*—date applied by the manufacturer after which an accurate result is not ensured by the manufacturer. **D5463**

extinction angle, *n*—angle between the extinction position and some plane, edge, or line in a crystal. **D1245**

extinction position, *n*—position in which an anisotropic crystal, between crossed polars, exhibits complete darkness. **D1245**

extra-cellular polysaccharide, *n*—see **EPS**. **D6161**

extracted ion chromatogram, EIC, *n*—plot of detector response for a specified ion versus elution time.

Discussion—The EIC is a graph of signal intensity versus time for a single mass to charge (m/z) or a range of masses. In typical use, this is a subset of the total ion chromatogram (TIC) in which all the mass ions detected are plotted together in a single two-dimensional (2D) graph of signal versus time. Further detail on this definition can be found in publications by Sparkman and Murray.[9,10] The most general term for this EIC type of plot was "mass chromatogram" as defined by Ron Hites in 1970.[11] Later, it was recognized that the mass chromatogram may include other ions (for example, multiple charged ions) that contribute toward the actual ion current detected by the MS. The term "extracted ion current" chromatogram or EIC has been in common use for many decades. Sometimes, EIC is also defined as "extracted ion chromatogram." Although other acronyms will be found in the literature such as XIC, in this test method, the more common acronym EIC is used for this 2D plot.

extrude, *v*—act of pushing a core from a core barrel or a core-barrel liner. **D4823**

facultative organisms, *n*—microbes capable of adapting to either aerobic or anaerobic environments. **D6161**

Fahrenheit (°F), *n*—designation of a degree on the Fahrenheit temperature scale that is related to the International Practical Temperature Scale. **D6161**

[9] Sparkman, O. David, *Mass Spectrometry Desk Reference*, second edition, Global View Publishing, 2006, ISBN 0-9660813-9-0.

[10] Murray, Kermit K., Boyd, Robert K., Eberlin, Marcos N., Langley, G. John, Li, Liang, et al, *IUPAC Standard Definitions of Terms Relating to Mass Spectrometry*, IUPAC Project 2003-056-2-500.

[11] Hites, R. A. and Biemann, K., "Mechanism of ketonic decarboxylation. Pyrolysis of calcium decanoate," *J. Am. Chem. Soc.*, Vol 94, No. 16, 1972, pp. 5722-5777, https://pubs.acs.org/doi/pdf/10.1021/ja00771a060.

AVA Documents
Document Sharing Hub

Full document details: ASTM D1129-24

fall (Δh), *n*—drop in the water-surface computed as the difference in the average water-surface elevation at adjacent cross sections. **D5130**

fall (Δh), *n*—drop in the water surface, in ft (m), computed as the difference in the water-surface elevation at adjacent cross sections (see Fig. 1 in Test Method D5388): **D5388**

$$\Delta h = h_1 - h_2$$

fall velocity, *n*—settling rate of a particle in a given medium. **D4410**

false negative, *n*—negative response for a sample that contains the target analyte(s) at or above the stated action level. **D6850**

false positive, *n*—positive response for a sample that contains the target analyte(s) below the stated action level. **D6850**

fathometer, *n*—electronic device for registering depths of water by measuring the time required for the transmission and reflection of sound waves between a sonic transducer and the lake or river bottom. **D6318**

feed, *n*—fluid that enters the device. **D5090**

feed, *n*—input solution to a treatment/purification system or device, including the raw water supply prior to any treatment. The liquid entering the module. **D6161**

feed channel spacer, *n*—plastic netting between membrane leaves which provides the flow channel for the fluid passing over the surface of the membrane and increases the turbulence of the feed-brine stream. **D6161**

feed distributor, *n*—plastic mesh cylinder at the core of the fiber bundle that distributes the feed evenly. **D6161**

feed pretreatment, *n*—process carried out on a crude (raw) feed stream before feeding to a membrane separation system to eliminate objectionable components such as biological agents and colloids that might impede the stable operation of the membrane. **D6161**

feed water, *n*—that water entering a device or process. **D6161**

ferric chloride, *n*—crystalline form of $FeCl_3$ $6H_2O$, a coagulant. **D6161**

ferric sulfate, *n*—$Fe_2(SO_4)_3$-$9H_2O$, a coagulant. **D6161**

ferrous sulfate, *n*—$FeSO_4$-$7H_2O$, a coagulant. **D6161**

fiber bundle, *n*—heart of the permeator consisting of the hollow fiber polymer membrane, epoxy tube sheet, nub and feed distributor. **D6161**

fiberglass reinforced plastic, *n*—see **FRP**. **D6161**

field duplicates, *n*—two separate samples collected at the same time and place under identical circumstances and treated exactly the same throughout field and laboratory procedures. Analysis of field duplicates gives an indication of the precision associated with sample collection, preservation, and storage, as well as with laboratory procedures. **D5790**

field duplicates (FD 1 and FD 2), *n*—two separate samples collected at the same time and placed under identical circumstances and treated exactly the same throughout field and laboratory procedures. Analyses of FD 1 and FD 2 give a measure of the precision associated with sample collection, preservation and storage, as well as with laboratory procedures. **D5175**

field duplicates (FD1 and FD2), *n*—two separate samples collected at the same time, placed under identical circumstances, and treated exactly the same throughout field and laboratory procedures. Analyses of FD1 and FD2 provide a measure of the precision associated with sample collection, preservation, and storage, as well as with laboratory procedures. **D5315**

field duplicates (FD 1 and FD 2), *n*—two separate samples collected at the same time and placed under identical circumstances and treated exactly the same throughout field and laboratory procedures. Analyses of FD 1 and FD 2 provide a measure of the precision associated with sample collection, preservation, and storage, as well as with laboratory procedures. **D5812**

field duplicates (FD1 and FD2), *n*—two separate samples collected at the same time and placed under identical circumstances and treated exactly the same throughout field and laboratory procedures. **D5475**

DISCUSSION—Analyses of FD1 and FD2 give a measure of the precision associated with sample collection, preservation, and storage, as well as with laboratory procedures.

field reagent blank, *n*—reagent water placed in a sample container, taken to the field along with the samples, and treated as a sample in all respects, including exposure to sampling site conditions, storage, preservation, and all analytical procedures. The purpose of the field reagent blank is to determine if test method analytes or other interferences are present in the field environment. **D5790**

field reagent blank (FRB), *n*—reagent water placed in a sample container in the laboratory and treated as a sample in all respects, including exposure to sampling site conditions, storage, preservation, and all analytical procedures. The reagent water must be transferred to an empty, clean sample container in the field. The purpose of the FRB is to determine if analytes or other interferences are present in the field environment. **D5175**

field reagent blank (FRB), *n*—reagent water placed in a sample container in the laboratory and treated in all respects as a sample, including being exposed to sampling site conditions, storage, preservation, and all analytical procedures. The purpose of the FRB is to determine whether method analytes or other interferences are present in the field environment. **D5315**

field reagent blank (FRB), *n*—reagent water placed in a sample container in the laboratory and treated as a sample in all respects, including exposure to sampling site conditions, storage, preservation, and all analytical procedures. The reagent water must be transferred to an empty, clean sample

AVA Documents
Document Sharing Hub

Full document details: ASTM D1129-24