This international standard was developed in accordance with internationally recognized principles on standardization established in the Decision on Principles for the Development of International Standards, Guides and Recommendations issued by the World Trade Organization Technical Barriers to Trade (TBT) Committee.

Designation: D1676 – 17

Standard Test Methods for Film-Insulated Magnet Wire[1]

This standard is issued under the fixed designation D1676; the number immediately following the designation indicates the year of original adoption or, in the case of revision, the year of last revision. A number in parentheses indicates the year of last reapproval. A superscript epsilon (ε) indicates an editorial change since the last revision or reapproval.

1. Scope*

1.1 These test methods cover procedures for testing film-insulated magnet wire that is used in electrical apparatus. These test methods are intended primarily for the evaluation of the electrical insulating materials used. The intent is that these test methods be used, except where modified, by individual specifications for particular applications.

1.2 These test methods present different procedures for evaluating given properties of round, rectangular or square, copper or aluminum film-insulated magnet wire.

1.3 The values stated in inch-pound units are the standard. The SI units in parentheses are provided for information only.

1.4 The test methods appear in the following sections:

	Sections
Bond Strength	4 – 12
Burnout (AC Overload Resistance)	13 – 21
Chemical Resistance	22 – 28
Coefficient of Friction	29 – 37
Continuity, DC High Voltage	38 – 45
Continuity, DC Low Voltage	46 – 53
Completeness of Cure	54 – 60
Cut-Through Temperature (Thermoplastic Flow)	61 – 68
Dielectric Breakdown AC Voltage	69 – 75
Dielectric Breakdown AC Voltage after Bending	76 – 82
Dielectric Breakdown AC Voltage at Elevated Temperatures	83 – 89
Dielectric Breakdown AC Voltage after Conditioning in Refrigerant Atmosphere	90 – 99
Dimensional Measurement	100 – 106
Dissipation Factor Measurement	107 – 114
Electrical Resistance	115 – 121
Elongation	122 – 129
Extractables, Refrigerant	130 – 140
Film Adherence and Flexibility	141 – 148
Formability:	
a) Elastic Ratio	152
b) Low Stress Elongation	153
c) Spring Back	154-155
Heat Shock	156 – 162
Oiliness	163 – 169
Scrape Resistance, Unidirectional	170 – 177
Solderability	178 – 185
Resistance to Insulating Liquids and Hydrolytic Stability	186 – 195

1.5 *This standard does not purport to address all of the safety concerns, if any, associated with its use. It is the responsibility of the user of this standard to establish appropriate safety, health, and environmental practices and determine the applicability of regulatory limitations prior to use.* Specific hazard statements are given in 9.5, 19.1, 19.3, 19.8, 52.1, 58, 59.1, 74.1, 112.1, 135.4, and 182.3.

NOTE 1—This test method is related to IEC 60851. Since both methods contain multiple test procedures, many procedures are technically equivalent while others differ significantly.

1.6 *This international standard was developed in accordance with internationally recognized principles on standardization established in the Decision on Principles for the Development of International Standards, Guides and Recommendations issued by the World Trade Organization Technical Barriers to Trade (TBT) Committee.*

2. Referenced Documents

2.1 *ASTM Standards:*

A228/A228M Specification for Steel Wire, Music Spring Quality

B3 Specification for Soft or Annealed Copper Wire

B43 Specification for Seamless Red Brass Pipe, Standard Sizes

B193 Test Method for Resistivity of Electrical Conductor Materials

B279 Test Method for Stiffness of Bare Soft Square and Rectangular Copper and Aluminum Wire for Magnet Wire Fabrication

B324 Specification for Aluminum Rectangular and Square Wire for Electrical Purposes

B609/B609M Specification for Aluminum 1350 Round Wire, Annealed and Intermediate Tempers, for Electrical Purposes

D149 Test Method for Dielectric Breakdown Voltage and Dielectric Strength of Solid Electrical Insulating Materials at Commercial Power Frequencies

D150 Test Methods for AC Loss Characteristics and Permittivity (Dielectric Constant) of Solid Electrical Insulation

D374/D374M Test Methods for Thickness of Solid Electrical Insulation

D877 Test Method for Dielectric Breakdown Voltage of Insulating Liquids Using Disk Electrodes

D1533 Test Method for Water in Insulating Liquids by

[1] These test methods are under the jurisdiction of ASTM Committee D09 on Electrical and Electronic Insulating Materials and are the direct responsibility of Subcommittee D09.12 on Electrical Tests.

Current edition approved Nov. 1, 2017. Published December 2017. Originally approved in 1959. Last previous edition approved in 2011 as D1676 – 03 (2011). DOI: 10.1520/D1676-17.

*A Summary of Changes section appears at the end of this standard

Copyright © ASTM International, 100 Barr Harbor Drive, PO Box C700, West Conshohocken, PA 19428-2959. United States

Documents
Document Sharing Hub
Full document details: ASTM D1676-17

Coulometric Karl Fischer Titration
D1711 Terminology Relating to Electrical Insulation
D2475 Specification for Felt
D2519 Test Method for Bond Strength of Electrical Insulating Varnishes by the Helical Coil Test
D5423 Specification for Forced-Convection Laboratory Ovens for Evaluation of Electrical Insulation
E4 Practices for Force Verification of Testing Machines
E6 Terminology Relating to Methods of Mechanical Testing
E8 Test Methods for Tension Testing of Metallic Materials
E220 Test Method for Calibration of Thermocouples By Comparison Techniques
E1356 Test Method for Assignment of the Glass Transition Temperatures by Differential Scanning Calorimetry
E1545 Test Method for Assignment of the Glass Transition Temperature by Thermomechanical Analysis

2.2 *Other Documents:*[2]
CCCM-911 Federal Specification for Bleached Muslin
IEC 60851 Methods of Test for Winding Wire

3. Terminology

3.1 *Definitions:*

3.1.1 *conductor, n*—a wire or combination of wires not insulated from each other, suitable for carrying electric current.

3.1.2 *magnet wire, n*—a metal electrical conductor, covered with electrical insulation, for use in the assembly of electrical inductive apparatus such as coils for motors, transformers, generators, relays, magnets, and so forth.

3.1.3 For definition of other terms used in this test method refer to Terminology D1711.

3.2 *Definitions of Terms Specific to This Standard:*

3.2.1 *film coating, n*—cured enamel coating.

3.2.2 *film insulated wire, n*—a conductor insulated with a film coating.

BOND STRENGTH OF ROUND FILM-INSULATED SELF-BONDING MAGNET WIRE BY THE HELICAL COIL TEST

4. Scope

4.1 This test method covers the determination of the bond strength of a self-bonding outer coating on round film-insulated magnet wires (AWG 14 through 44). Both thermal and solvent bonding methods are defined.

4.2 *This international standard was developed in accordance with internationally recognized principles on standardization established in the Decision on Principles for the Development of International Standards, Guides and Recommendations issued by the World Trade Organization Technical Barriers to Trade (TBT) Committee.*

5. Terminology

5.1 *Definitions of Terms Specific to This Standard:*

5.1.1 *bond strength, n*—a measure of the force required to separate surfaces which have been bonded together.

5.1.1.1 *Discussion*—For magnet wire which has been self bonded or varnish treated, the bond strength is reported as the force required to break a test specimen in flexure.

6. Summary of Test Method

6.1 Flexural strength tests are made on bonded helical coils to determine the force required to break the coil under specified conditions.

7. Significance and Use

7.1 Bond strength values obtained by flexural tests provide information with regard to the bond strength of a particular self-bonding outer coating in combination with a particular round film-insulated magnet wire when measured under conditions described in this test method.

8. Apparatus

8.1 *Testing Machine*—Tensile testing machines used for bond strength test shall conform to the requirements of Practices E4.

8.2 *Test Fixture*—The test fixture shall conform to the test fixture for bond strength tests required by Test Method D2519.

8.3 *Mandrel Holder*—The mandrel holder shall be a metal block of sufficient size and thickness with a hole capable of supporting the winding mandrel in a vertical position during the bonding cycle of the helical coil.

8.4 *Winding Tensions*—The winding tensions are listed in Table 1.

8.5 *Bonding Weights*—Bonding weights (listed in Table 1) are made with a hole through the center to allow the weight to slip freely over the winding mandrel and load a helical coil during bonding of coil.

8.6 *Forced-Air Oven*—See Specification D5423.

9. Test Specimen Preparation

9.1 Select the appropriate mandrel from Table 1, spray it with a suitable release agent (fluorocarbon or silicone spray is adequate), and allow it to dry. Carefully wind onto the prepared mandrel a length of wire, long enough to wind a helical coil at least 3 in. (76 mm) long. The winding tension shall be as prescribed in Table 1. Ensure that the coil is wound without space between turns.

9.2 Prepare six or more coils from each wire sample.

9.3 *Thermal Bonding*—Mount the mandrel supporting the coil vertically in the mandrel holder and loaded with the bonding weight specified in Table 1. Place the mandrel holder and coil into a forced-air oven at a specified temperature for a specified time, after which the assembly is removed from the oven and cooled to room temperature. Remove the coil from the mandrel and inspect the coil for breaks or physical damage prior to testing.

9.4 *Solvent Bonding*—After winding, immerse the coil and mandrel into the specified solvent for 5 s. Immediately

[2] Available from Standardization Documents Order Desk, Bldg. 4 Section D, 700 Robbins Ave., Philadelphia, PA 19111-5094, Attn: NPODS.

AVA Documents
Document Sharing Hub

Full document details: ASTM D1676-17

TABLE 1 Helical Coil Bond Parameters

Wire Size, AWG	Mandrel Diameter[A]		Recommended Winding Tension		Bond Weights[A]	
	in.	mm	g	N	g	N
44	0.011	0.28	2.5	0.025	0.80	0.008
43	0.011	0.28	2.5	0.025	0.80	0.008
42	0.016	0.41	5.0	0.50	1.60	0.016
41	0.016	0.41	5.0	0.50	1.60	0.016
40	0.022	0.56	10.0	0.098	3.15	0.031
39	0.022	0.56	10.0	0.098	3.15	0.031
38	0.022	0.56	10.0	0.098	3.15	0.031
37	0.032	0.81	20.0	0.196	6.30	0.062
36	0.032	0.81	20.0	0.196	6.30	0.062
35	0.032	0.81	20.0	0.196	6.30	0.062
34	0.044	1.12	40.0	0.392	12.5	0.123
33	0.044	1.12	40.0	0.392	12.5	0.123
32	0.044	1.12	40.0	0.392	12.5	0.123
31	0.063	1.60	80.0	0.785	25.0	0.245
30	0.063	1.60	80.0	0.785	25.0	0.245
29	0.063	1.60	80.0	0.785	25.0	0.245
28	0.088	2.24	160.0	1.569	50.0	0.490
27	0.088	2.24	160.0	1.569	50.0	0.490
26	0.088	2.24	160.0	1.569	50.0	0.490
25	0.124	3.15	315.0	3.089	100.0	0.981
24	0.124	3.15	315.0	3.089	100.0	0.981
23	0.124	3.15	315.0	3.089	100.0	0.981
22	0.177	4.50	630.0	6.178	200.0	1.961
21	0.177	4.50	630.0	6.178	200.0	1.961
20	0.177	4.50	630.0	6.178	200.0	1.961
19	0.248	6.30	1250.0	12.258	400.0	3.923
18	0.248	6.30	1250.0	12.258	400.0	3.923
17	0.248	6.30	1250.0	12.258	400.0	3.923
16	0.354	8.99	2500.0	24.517	800.0	7.845
15	0.354	8.99	2500.0	24.517	800.0	7.845
14	0.354	8.99	2500.0	24.517	800.0	7.845

[A] ±2 % on all mandrels and bond weights.

thereafter, secure the mandrel supporting the coil in the mandrel holder and load the coil with the bonding weight specified in Table 1. Dry the coils for 1 h at room temperature. Carefully remove the coils from the mandrels and further dry in a forced air oven for 15 ± 2 min at 100 ± 3°C (unless otherwise specified). Cool the coil to room temperature, inspect for breaks or physical damage, and test.

9.5 *Resistance Bonding*—Mount the mandrel supporting the coil vertically in a mandrel holder and loaded with the bonding weight specified in Table 1. Energize the coil with enough current and time to allow bonding. Remove the coil from the mandrel and inspect for breaks or physical damage, and test. Specific bonding conditions shall be agreed upon between the manufacturer and the user. (**Warning**—*Lethal voltages are a potential hazard during the performance of this test. It is essential that the test apparatus, and all associated equipment electrically connected to it, be properly designed and installed for safe operation. Solidly ground all electrically conductive parts which it is possible for a person to contact during the test. Provide means for use at the completion of any test to ground any parts which were at high voltage during the test or have the potential for acquiring an induced charge during the test or retaining a charge even after disconnection of the voltage source. Thoroughly instruct all operators as to the correct procedures for performing tests safely. When making high voltage tests, particularly in compressed gas or in oil, it is possible for the energy released at breakdown to be sufficient to result in fire, explosion, or rupture of the test chamber. Design test equipment, test chambers, and test specimens so as to minimize the possibility of such occurrences and to eliminate the possibility of personal injury. If the potential for fire exists, have fire suppression equipment available.)*

10. Procedure

10.1 Use a rate of loading such that the duration of the test shall be greater than the full-scale response time of the load recording instrument.

10.2 Prepare sufficient specimens to obtain six data points for each wire sample. One or more of the specimens are potentially going to be destroyed in adjusting the rate of loading.

10.3 Break specimens according to the test procedures described in Test Method D2519.

10.4 Tests at other than room temperature are able to be performed, if desired, using an insulated heat-resistant enclosure, designed to fit around the test fixture and in the stress strain analyzer. Place the specimens in the fixture in the oven for 15 min but not more than 30 min after the oven has recovered to the set temperature ±2°C. Break the specimens according to the test procedures described in Test Method D2519. The specified test temperature and minimum bond strength shall be agreement upon between the manufacturer and the user.

11. Report

11.1 Report the following:

11.1.1 Identification of size, build and type of insulation used,

11.1.2 Heat or solvent bonding (including temperature or type of solvent, or both),

11.1.3 Test temperature, and

11.1.4 A table listing the individual values in pounds, grams or newtons of bond strength and their averages.

TABLE 2 Critical Differences, Percent of Average Pounds to Break[A]

Number of Observations in each Average	Single-Operator Precision	Within-Laboratory Precision	Between-Laboratory Precision
6	10	11	12

[A] The critical differences were calculated using t = 1.960, which is based on infinite degrees of freedom

12. Precision and Bias[3]

12.1 In comparing two averages of six observations, the differences are not expected to exceed the critical difference in Table 2, in 95 out of 100 cases when all of the observations are taken by the same well-trained operator using the same piece of test equipment and specimens randomly drawn from the same sample of material.

[3] Supporting data are available from ASTM International Headquarters. Request RR:D09-1007.

AVA Documents
Document Sharing Hub

Full document details: ASTM D1676-17

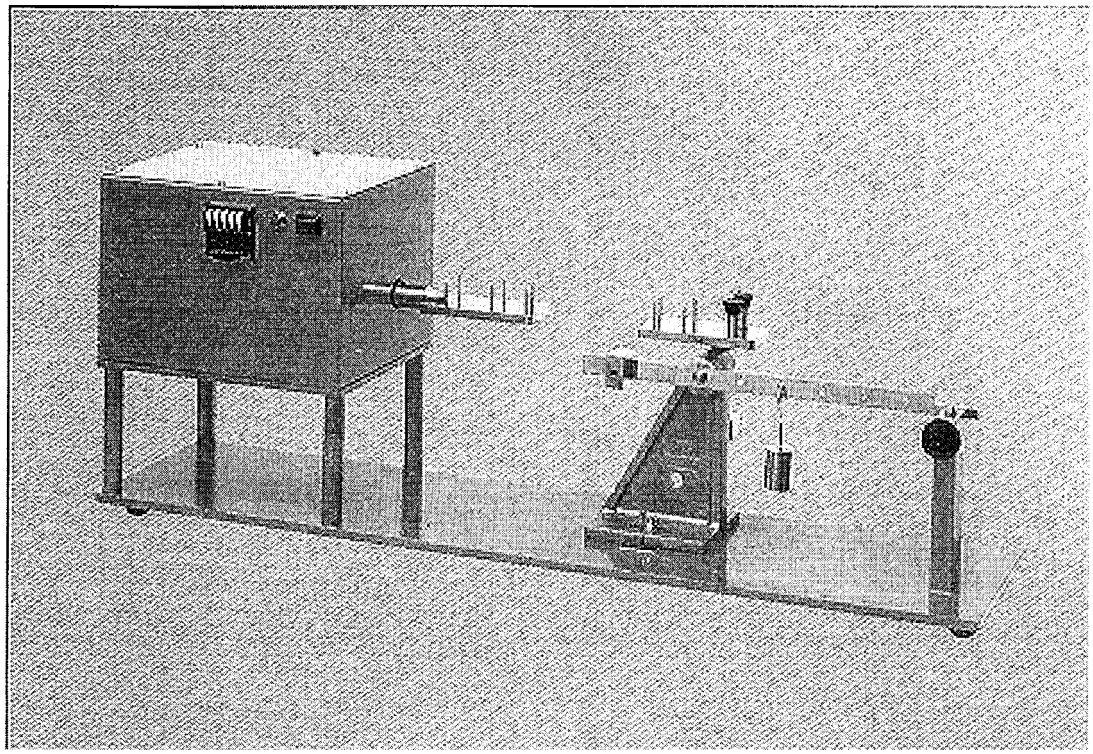

FIG. 1 Twist Fabricator

12.2 *Precision*—Two averages of observed values are considered significantly different at the 95 % probability level if the difference equals or exceeds the critical differences listed in Table 2.

12.3 *Bias*—This test method has no bias because the value of bond strength is determined solely in terms of this test method.

BURNOUT (AC OVERLOAD RESISTANCE)

13. Scope

13.1 This test method and equipment described herein is used to determine the ac overload resistance of 18 AWG heavy build film-insulated round copper magnet wire by measuring the time to obtain a dielectric failure when subjected to a step-wise increase in AC overload current.

13.2 *This international standard was developed in accordance with internationally recognized principles on standardization established in the Decision on Principles for the Development of International Standards, Guides and Recommendations issued by the World Trade Organization Technical Barriers to Trade (TBT) Committee.*

14. Terminology

14.1 *Definitions of Terms Specific to This Standard:*

14.1.1 *burnout (of magnet wire), n*—the time required for dielectric failure to occur between wires of a twisted pair as a result of heating due to controlled ac overload current.

14.1.2 *one twist (dielectric twist specimen), n*—one 360° revolution of the head of the dielectric twist maker.

15. Summary of Test Method

15.1 A controlled current (I) is passed through both strands of a film-insulated magnet wire twisted pair. The resistance heating of this specimen due to the current (I) will result in thermal degradation of the film. When the level of degradation is sufficient for a 50-mA current at 130 ± 10 Vac to pass through the film, burnout occurs. The burnout is reported in seconds (t).

16. Significance and Use

16.1 The film-insulated magnet wire current burnout tester is designed to rate the performance of various wire insulation under higher than normal operating temperatures brought about by current overloads. The seconds (t) to burnout relates to the performance of the film coating under overload conditions in actual field operations.

16.2 Test results will allow the film-insulated magnet-wire user to analyze the relative performance of various magnet-wire products.

16.3 Test condition #1 was developed for faster and more reproducible testing results, especially for product conformance testing.

16.4 Test condition #2 was developed to provide the greatest relative product performance differentiation. Calculation of

AVA Documents
Document Sharing Hub

Full document details: ASTM D1676-17

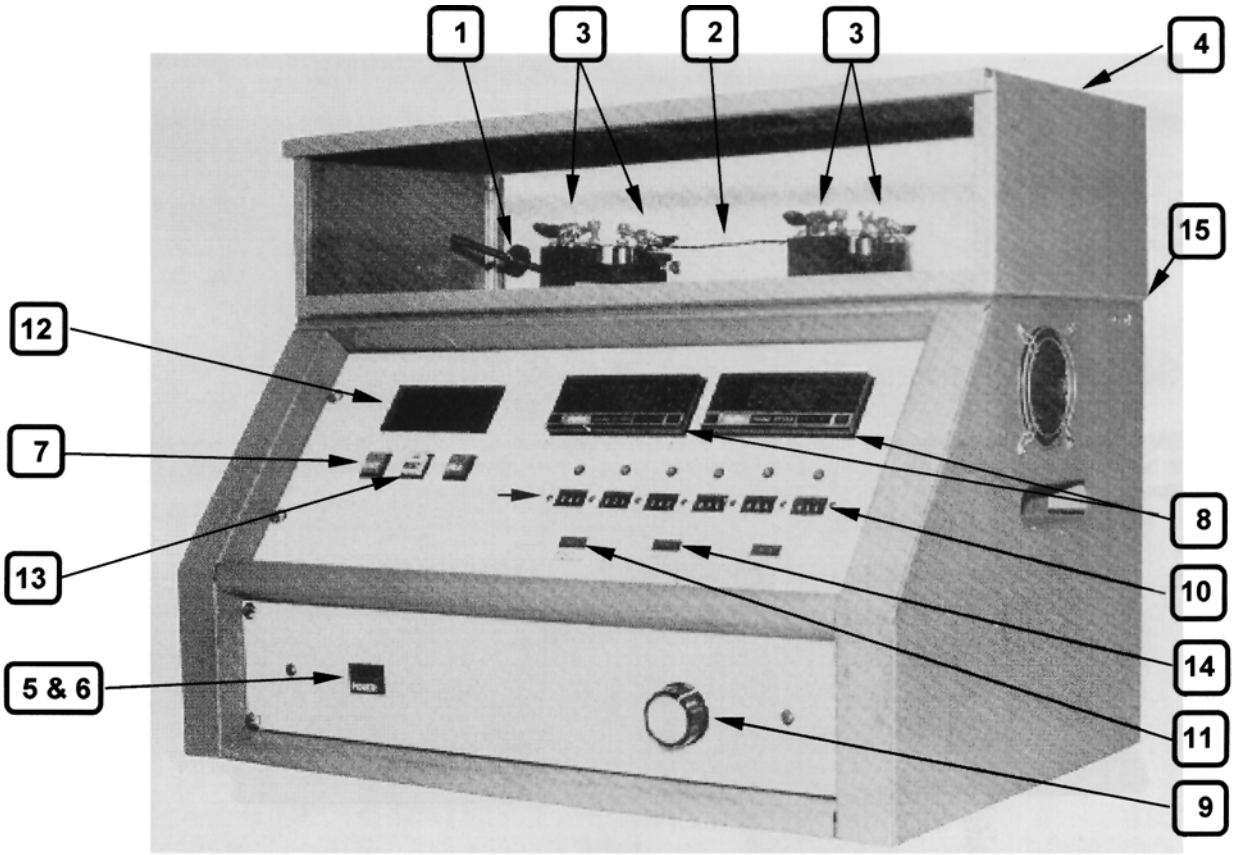

No.	Description	No.	Description
1.	Load weight adjustment	9.	Current balance adjustment
2.	Twisted pair specimen	10.	Amp step settings
3.	Connector clamps	11.	Reset light
4.	Apparatus sample cover	12.	Elapsed time in seconds
5.	Power switch	13.	Reset button
6.	Power light	14.	Overload light
7.	Start button	15.	Safety switch
8.	Amp meter readout		

FIG. 2 Burnout Tester

an Overload Figure of Merit (OFM) is possible using this procedure and is described in 19.9.

17. Apparatus

17.1 *Twist Fabricator,* that duplicates in function the one pictured in Fig. 1.[4]

17.2 *Three-Pound Load Weight,* necessary for use in conjunction with the twist fabricator.

17.3 A means of mechanically stripping the legs of the twisted-pair specimen to a clean bright copper finish.

17.4 *Small Vise or Pair of Needle-Nose Pliers,* for stabilizing the specimen during the stripping operation, and removal of the test specimen from the tester.

17.5 *Burnout Tester,* see Fig. 2.[5]

18. Test Specimen Preparation

18.1 Using the twist fabricator and a 3-lb load weight, form a 30-in. (76-cm) length of 18 AWG heavy-build film-insulated

[4] Suitable testers are available from A/Z Tech, Inc., 2701 South Coliseum Boulevard, Suite 1228, Fort Wayne, IN 46803; Ampac International, 1118 Cedar St, Fort Wayne, IN 46803; or Byrne Harnessed Electronics, Inc., 16726 150th Ave., Spring Lake, MI 49456.

[5] Test equipment available from Byrne Harnessed Electronics, Inc., 16726 150th Ave., Spring Lake, MI 49456.

AVA Documents
Document Sharing Hub

Full document details: ASTM D1676-17

round copper magnet wire into a U-shape and twist the two legs together. A total of 8 or 16 twists are required. Cut the loop and carefully hand-form the ends for easy placement in the burnout tester.

18.2 There shall be no sharp bends in the specimen or damage to the insulation. After ensuring that the legs are the proper length to fit the burnout tester, the excess shall be trimmed and each leg carefully stripped bare. Maintain a minimum of 0.5 in. (13 mm) of insulated wire between the twisted portion of the twisted pair and the stripped bare ends.

18.3 Test a minimum of five specimens for each type of film-insulated magnet wire being evaluated.

19. Procedure

19.1 **Warning**—*Lethal voltages are a potential hazard during the performance of this test. It is essential that the test apparatus, and all associated equipment electrically connected to it, be properly designed and installed for safe operation. Solidly ground all electrically conductive parts which it is possible for a person to contact during the test. Provide means for use at the completion of any test to ground any parts which were at high voltage during the test or have the potential for acquiring an induced charge during the test or retaining a charge even after disconnection of the voltage source. Thoroughly instruct all operators as to the correct procedures for performing tests safely. When making high voltage tests, particularly in compressed gas or in oil, it is possible for the energy released at breakdown to be sufficient to result in fire, explosion, or rupture of the test chamber. Design test equipment, test chambers, and test specimens so as to minimize the possibility of such occurrences and to eliminate the possibility of personal injury. If the potential for fire exists, have fire suppression equipment available.* Referring to Fig. 2, use the tensiometer to adjust the load weight so that 300 ± 6.0 g of tension will be applied to the twisted-pair specimen. Adjust the current step controls to the settings indicated in Table 3.

19.2 *Special Considerations:*

19.2.1 A warm-up is recommended prior to using the burnout tester for an actual test. This is accomplished by replacing the twisted-pair specimen (see Section 18) with two straight lengths of AWG 18 round copper bare wire and proceed with 19.3 – 19.5. When the timer reaches 900 s, push reset. The tester is warmed up and ready for use.

19.2.2 If the over/under drive lamp energizes during normal testing, the results obtained are invalid. Push reset, replace the test specimen, and proceed with 19.4 – 19.6. This condition is often the result of poor electrical contact; clean the contacts as necessary.

TABLE 3 Current Step Controls

Current Steps	Time t in seconds	Condition 1 No. of Twists	Condition 1 I, Amps[A]	Condition 2 No. of Twists	Condition 2 I, Amps[A]
A-1	0 to 180	16	34	8	36
A-2	181 to 360	16	36	8	38
A-3	361 to 540	16	39	8	40
A-4	541 to 720	16	43	8	42
A-5	721 to 900	16	48	8	44
A-6	901 +	. . .	. . .	8	46

[A] Amps ± 2 %.

19.3 Secure the specimen in the burnout tester using the clamps, and close the lid. (**Warning**—Provide adequate ventilation during burnout testing of film-insulated magnet wire to remove products of decomposition.)

19.4 Turn on the main power switch and wait for completion of reset indicated by lamp.

19.5 Push the start button and after the current indicated on one meter has stabilized at first Amp setting, adjust the balance so that the second meter also reads the same.

19.6 Upon completion of the test indicated by the lamp, note the time in seconds on the meter.

19.7 Push the reset button and wait until reset is complete.

19.8 Carefully remove test specimen with needle-nose pliers and repeat 19.4 – 19.8 for the next specimen. (**Warning**—The twisted-pair specimen remains hot for some time after the test is completed.)

19.9 *Calculation of Overload Figure of Merit (OFM) When Using Condition #2:*

$$OFM = \sum (I^2 t / 10^5) \quad (1)$$

where:

I = the applied current in each step of the test, and
t = time in seconds for each step.

20. Report

20.1 Report the following information:
20.1.1 Nominal conductor size,
20.1.2 Build,
20.1.3 Type of insulation,
20.1.4 Test condition used (1 or 2),
20.1.5 Time to failure of each individual specimen,
20.1.6 Average time to failure, and
20.1.7 OFM if using Condition #2.

21. Precision and Bias

21.1 *Precision*—This test method has been in use for many years, but no information has been presented to ASTM upon which to base a statement of precision. No activity is planned to develop such information.

21.2 *Bias*—This test method has no bias because the value for burnout (AC overload resistance) is determined solely in terms of this test method.

CHEMICAL RESISTANCE

22. Scope

22.1 This test method determines the effects of ambient chemical conditions on film-insulated magnet wire.

22.2 *This international standard was developed in accordance with internationally recognized principles on standardization established in the Decision on Principles for the*

AVA Documents
Document Sharing Hub

Full document details: ASTM D1676-17

Development of International Standards, Guides and Recommendations issued by the World Trade Organization Technical Barriers to Trade (TBT) Committee.

23. Significance and Use

23.1 The retention of the integrity of the film insulation is desirable when film-insulated magnet wire is exposed to environments that contain chemical liquids (or vapors). This test provides information useful for predicting the suitability of the film-insulated magnet wire when exposed to these environments.

23.2 Since the test is normally conducted at room temperature, the results are not necessarily indicative of performance at other temperatures.

24. Apparatus

24.1 *Containers for Liquids*—Test tubes 10 in. (250 mm) in length by 1 in. (25 mm) in diameter or equivalent.

24.2 *Scraper*—A device that will position a steel needle or music wire (Specification A228/A228M) 0.016 in. (0.4 mm) in diameter in a horizontal plane and perpendicular to the axis of the wire specimen. The force applied between the needle or music wire and the anvil is adjusted by adding weights to the spindle as shown in Fig. 3.

24.3 *Cheesecloth,* Grade A, bleached, unsized cheesecloth shall be used.

24.4 *Forced-Air Oven,* (see Specification D5423).

25. Test Specimen Preparation

25.1 Select 12 ± 1 in. (300 ± 25 mm) long specimens of unbent, unstretched film-insulated magnet wire. Stress anneal specimens for 10 ± 1 min at 150 ± 3°C (302 ± 5°F).

26. Procedure

26.1 *Exposure*—Immerse specimens in approximately 8 in. (200 mm) of applicable liquid at 23 ± 2°C (73 ± 4°F) for 24 h or as specified. Remove each specimen and carefully blot to dryness with a clean cheesecloth. Cut off and discard the lower 1 in. (25 mm) of the specimen.

NOTE 2—Immerse each specimen in only one liquid.

26.2 *Wire Diameter 0.10 to 0.010 in. (2.5 to 0.25 mm) (AWG 10 to 30)*—Test each specimen using the scraper device, after 1 but before 2 min after removal from the liquid. Apply the specified force to the needle and the specimen. Use 580 ± 12 g when testing 18 AWG copper wire, and 340 ± 7 g when testing 18 AWG aluminum wire. The force used to test other magnet wire sizes shall be based on agreement between user and supplier. Scrape the specimen for a length of not less than 6 in. (150 mm) of the portion previously immersed. Draw the specimen between the needle and anvil at a uniform speed of approximately 2 in./s (50 mm/s). Exposure of the conductor, as detected by visual inspection, shall constitute failure.

26.3 *Wire Diameter 0.20 to 0.114 in. (5.2 to 2.9 mm) (AWG 4 to 9) and 0.009 to 0.002 in. (0.24 to 0.05 mm) (AWG 31 to 44)*—Test each specimen after 1 but before 2 min after removal from the liquid, by drawing once, without stretching, between four folds of cheesecloth held firmly between the thumb and the forefinger. Exposure of the conductor, as detected by visual inspection, shall constitute failure.

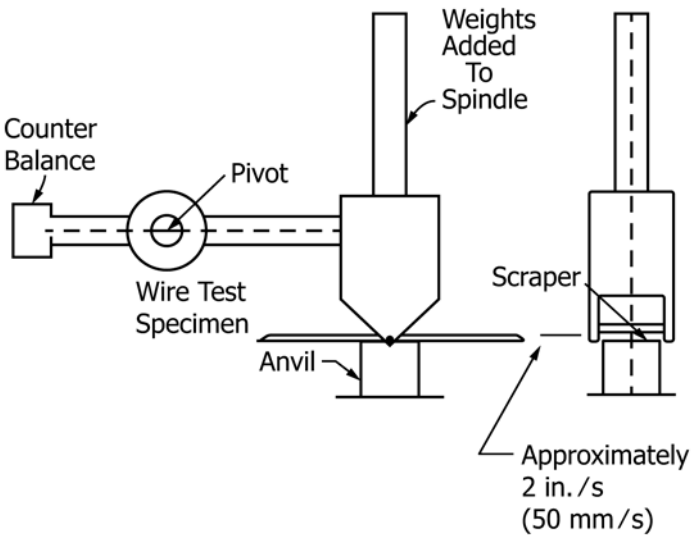

FIG. 3 Scrape Fixture for Chemical Resistance Tester

27. Report

27.1 Report the following information:
27.1.1 Nominal conductor size,
27.1.2 Conductor composition,
27.1.3 Build and type of insulation,
27.1.4 Time of immersion,
27.1.5 Temperature of liquid,
27.1.6 Liquid used,
27.1.7 Scraping force if used, and
27.1.8 Visual observations, pass or fail.

28. Precision and Bias

28.1 No information is presented about either precision or bias of this test method as the determination of chemical resistance of magnet wire is nonquantitative.

DYNAMIC COEFFICIENT OF FRICTION TEST METHOD

29. Scope

29.1 This test method determines the dynamic coefficient of friction between a wire moving at constant speed and a lead contact surface.

29.2 *This international standard was developed in accordance with internationally recognized principles on standardization established in the Decision on Principles for the Development of International Standards, Guides and Recommendations issued by the World Trade Organization Technical Barriers to Trade (TBT) Committee.*

30. Terminology

30.1 The dynamic coefficient of friction is the ratio of the force developed between a moving wire surface and the load contact surface, described by the following equation:

AVA Documents
Document Sharing Hub

Full document details: ASTM D1676-17

$$\mu_d = F/L \quad (2)$$

where:

μ_d = dynamic coefficient of friction,
F = force developed between a moving wire surface and the load contact surface, gf (N), and
L = test load, gf (N).

31. Summary of Test Method

31.1 The wire specimen is pulled at a constant speed over a load contact surface under a test load (L). A frictional force (F) is developed between the wire surface and the load contact surface and transferred to an appropriate measuring device. The reading (F) is divided by the test load (L) to obtain the dynamic coefficient of friction (μ_d).

32. Significance and Use

32.1 The dynamic coefficient of friction (μ_d) of film-insulated magnet wire is primarily a measure of lubricity and the smoothness of the insulation surface. The combination of these factors represented by the coefficient of friction value affects windability, lay of wire, fill factor of electrical coils, and the spooling quality during manufacture of film-insulated magnet wire.

33. Apparatus

33.1 The tester shown in Fig. 4 is an example of an acceptable design.

33.2 A motor shall pull the wire specimen at 50 ± 5 ft/min (15 ± 1.5 m/min) across a smooth surface using a motor-driven take-up.

33.3 Various load weights shall be available, which will provide 100 to 1000 gf (0.98 to 9.81 N). The load surface shall be synthetic sapphire and have a surface roughness of not more than 0.5 µm (20 µin.). The sapphires are described and shall be mounted in accordance with Fig. 6.

33.4 There shall be a means to guide the wire and a means to maintain a slight tension, if needed.

33.5 Electronic force-measuring devices or transducers incorporated with a chart recorder measure the force due to friction. The electronic force-measuring device provides a record indicating the peak variation along the surface of the wire. A force transducer with a range of 0 to 500 gf (0 to 5.0 N) and a chart recorder with a 0 to 5 V range and a 0.5-s full-scale response time is satisfactory.

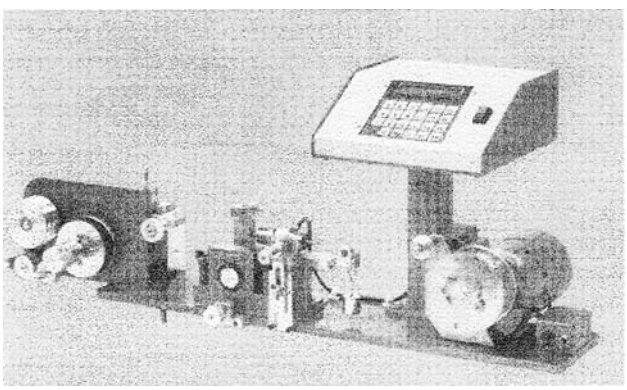

FIG. 4 Coefficient of Friction Tester

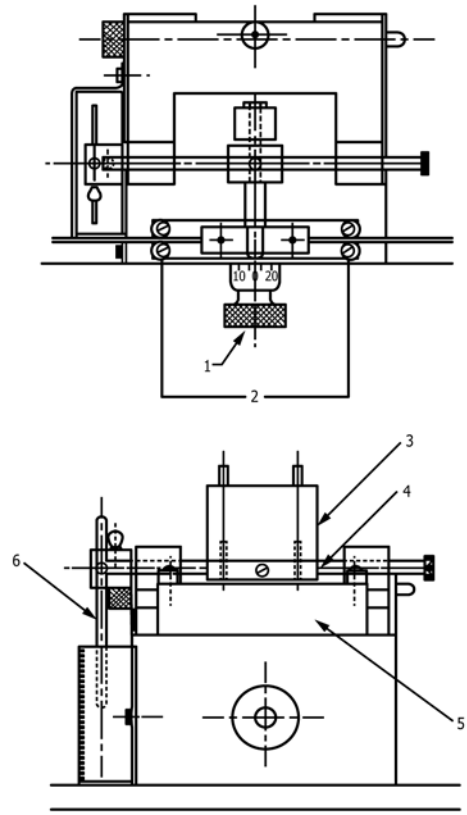

NOTE 1—Calibrated Adjustment for parallelism between the test load and test bed surfaces.
NOTE 2—Test Bed Guides
NOTE 3—Test Weight
NOTE 4—Load Block — See Figures 2-4 and 2-5
NOTE 5—Test Bed
NOTE 6—Dampening System

FIG. 5 Detail Drawing of Friction Head Assembly

33.6 It is suitable to use a mechanical dynamometer in place of an electronic force transducer and chart recorder. Two dynamometer ranges, 0 to 50 gf (0 to 0.5 N) and 0 to 200 gf (0 to 2.0 N), are satisfactory.

33.7 Another part of the measuring device is a mechanical dampening system consisting of a paddle and a container filled to a depth of 2 ± 0.2 in. (5 ± 1 mm) with oil having a viscosity of 10 000 ± 500 cps (10 ± 0.5 Pa·s) at 25°C. Dampening is also accomplished by electronic means eliminating the need for this mechanical dampening system.

33.8 A cleaning solvent appropriate for the lubricant being tested shall be used.

34. Test Specimen

34.1 Remove the wire test specimen from the shipping package by dereeling over the end flange or pulling from the pail or drum. Remove all contaminated wire before selecting test specimens.

AVA Documents
Document Sharing Hub

Full document details: ASTM D1676-17

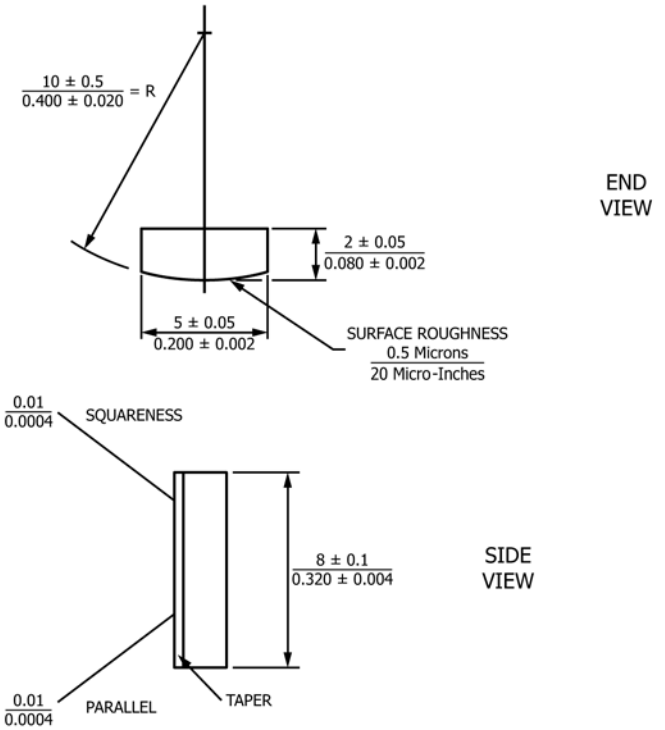

NOTE 1—Top number denotes millimetres: lower number denotes decimals of an inch.

FIG. 6 Load Contact Surface – Sapphire (Synthetic)

35. Procedure

35.1 Level off a smooth surface using the leveling leg screws and the float level. Adjust the sensitivity of the electronic force transducer to the appropriate range, and set the chart recorder at full-scale for the wire size being tested using a calibrating weight. Remove the calibrating weight after the transducer and chart recorder have been adjusted.

35.2 If a mechanical dynamometer is used, install one having the correct range for the size wire being tested according to Table 4.

35.3 Clean the sapphire surfaces located on the load block, that are in contact with the wire, with an appropriate cleaning solvent and dry thoroughly.

35.3.1 Although the wear resistance of the sapphire contact blocks exceeds that of steel, inspect the surfaces of the blocks at periodic intervals (for example, every three months) under 100× magnification for evidence of wear.

35.4 Lower the dampening paddle into the oil: immerse completely for AWG 14-30; immerse one-half paddle for AWG 31-44.

35.5 Thread the wire over appropriate guide pulleys so the wire is in contact with the two sapphires.

35.6 Apply the appropriate test load according to Table 5.

TABLE 4 Dynamometer Parameters

Wire Size Range (AWG)	Grams - Force	Newtons
14–35	0–200	0 to 2.0
36–44	0–50	0 to 0.5

TABLE 5 Test Loads for Coefficient of Friction Testing

Wire Size Range (AWG)	Test Load in Grams-Force ±2 %	Test Load in Newtons
14–24	1000	9.9
25–35	600	5.9
36–40	200	2.0
41–44	100	1.0

TABLE 6 Threshold Fault Current

DC Test Voltage, V ±5 %	Threshold Fault Current ±10 %, μA
3000	16
2500	14
2000	12
1500	10
1000	8
750	7
500	6
350	5

35.7 Position the test load on the test bed where no reading is indicated on the force transducer or dynamometer.

35.8 Zero the mechanical dynamometer if used. Adjust the calibrated dial to make the test load parallel with the test bed surface.

35.9 Turn on the tester to pull the test wire through the apparatus.

35.10 Apply slight tension to keep the wire traveling smoothly.

35.11 Allow time (15 s) for start-up variations to cease. Record the average dynamometer reading to the nearest grams force (newton).

36. Calculation

36.1 Calculate the average dynamic coefficient of friction (μ_d) as follows:

$$\mu_d = F/L \tag{3}$$

where:

F = average dynamometer force reading, gf (N), and
L = test load, gf (N).

37. Report

37.1 Report the following information:
37.1.1 Nominal conductor size,
37.1.2 Build,
37.1.3 Insulation type,
37.1.4 Lubricant,
37.1.5 Test load used,
37.1.6 Average coefficient of friction value (μ_d),
37.1.7 Maximum reading, and
37.1.8 Standard deviation of the readings.

38. Precision and Bias

38.1 This test method has been in use for many years, but no information has been presented to ASTM upon which to base a statement of precision. No activity is planned to develop such information.

AVA Documents
Document Sharing Hub

Full document details: ASTM D1676-17

38.2 This test method has no bias because the values for dynamic coefficient of friction are determined solely in terms of this test method.

CONTINUITY, DC HIGH VOLTAGE

39. Scope

39.1 This test method covers the evaluation of the continuity of film-insulated magnet wire, in sizes ranging from 0.0641 to 0.0020 in. (1.628 to 0.051 mm) (AWG No. 14 to 44), inclusive by dc high voltage.

39.2 *This international standard was developed in accordance with internationally recognized principles on standardization established in the Decision on Principles for the Development of International Standards, Guides and Recommendations issued by the World Trade Organization Technical Barriers to Trade (TBT) Committee.*

40. Terminology

40.1 *Definitions of Terms Specific to This Standard:*

40.1.1 *continuity (of magnet-wire insulation), n*—the degree of freedom from defects in the film coating as indicated by the number of electrical faults per unit length.

40.1.2 *fault (in magnet-wire insulation), n*—a defect, or group of defects, within a length of wire being exposed to a proof voltage, such that current through the defect(s) will cause the test equipment to indicate one fault.

40.1.3 *fault detection current, n*—the current required to indicate a fault under specified conditions.

40.1.4 *sensitivity (of fault detector circuit), n*—the minimum current required to indicate a fault.

40.1.5 *test voltage, n*—the open-circuit voltage applied between the contact sheave and the grounded conductor.

41. Significance and Use

41.1 This test provides a method of nondestructive testing for continuity of film-insulated magnet wire. Excessive faults in film insulation could result in failure of wound coils.

42. Apparatus

42.1 **Warning**—*Lethal voltages are a potential hazard during the performance of this test. It is essential that the test apparatus, and all associated equipment electrically connected to it, be properly designed and installed for safe operation. Solidly ground all electrically conductive parts which it is possible for a person to contact during the test. Provide means for use at the completion of any test to ground any parts which were at high voltage during the test or have the potential for acquiring an induced charge during the test or retaining a charge even after disconnection of the voltage source. Thoroughly instruct all operators as to the correct procedures for performing tests safely. When making high voltage tests, particularly in compressed gas or in oil, it is possible for the energy released at breakdown to be sufficient to result in fire, explosion, or rupture of the test chamber. Design test equipment, test chambers, and test specimens so as to minimize the possibility of such occurrences and to eliminate the possibility of personal injury. If the potential for fire exists, have fire suppression equipment available.*

High Voltage Power Supply—The high voltage power supply must be regulated and provide to the electrode sheaves a filtered direct current voltage free of transient over-voltage spikes. Measure the voltage with a high impedance device, such as an electrostatic voltmeter. Provide sufficient series resistance so that rapid collapse of the voltage across the wire occurs when a fault is detected. Rapid recovery of the voltage to the test level is also required.

42.2 *Steady-State Short-Circuit Current*—The steady-state short-circuit current shall be limited by the power supply to 25 ± 5 mA at any test voltage setting. A50 MΩ fault resistance at the electrode sheaves shall not cause more than a 75 % drop in voltage on the high-voltage electrode sheaves at any voltage setting.

42.3 *Fault Detection Circuit*—The sensitivity of the fault detection circuit shall be such that the threshold fault current will be as shown in Table 4, with a tolerance of ±10 %. The speed of response of the fault circuit shall be 4 to 6 ms. The fault circuit shall be designed to repeat at the rate of 450 ± 45 counts/min when bare wire is passed over the electrode sheaves.

42.4 *Fault Counter*—The fault counter shall be a digital readout device such as an electromechanical counter or its electronic equivalent. Means of resetting the counter to zero shall be included. Additional recorder equipment for making records of fault patterns is optional.

42.5 *Electrode Sheaves:*

42.5.1 For sizes AWG 14–24 (see 42.8), dual high-voltage electrode sheaves shall be constructed of stainless steel with an outside diameter of 1.69 in. (43 mm), with a "V" groove such that the included angle will be 90 ± 3°C and the root diameter will be 1.50 +0, −0.011 in. (38 +0, −0.25 mm). The electrode sheave center shall be separated by 1.81 ± 0.005 in. (46 ± 0.13 mm).

42.5.2 The electrode sheaves shall have a contact length of 1.0 +0, −0.1 in. (25.4 +0, −2.5 mm). The electrode sheaves are placed between two grounded guide sheaves and on a line offset 42 ± 3° from a line intersecting the center of the guide sheaves. The two grounded guide sheaves are of the same material and their centers are spaced 5.50 in. (140 mm) apart on a horizontal line. These grounded sheaves are constructed with an outside diameter of 2 in. (51 mm), with a "V" groove such that the included angle will be 45 ± 3° and the root diameter will be 1.50 ± 0.1 in. (38 ± 2.5 mm). (See Fig. 7.)

42.5.3 For sizes AWG 31 to 44, (see 42.8) install the 1-in. diameter dual electrode sheaves. These electrode sheaves are made of stainless steel with an outside diameter of 1.13 ± 0.01 in. (28.7 ± 0.25 mm) and a "V" shaped groove such that the included angle will be 90 ± 3° and the root diameter will be 1.00 +0, −0.01 in. (25.4 +0, −0.25 mm). The centers of the dual electrode sheaves are separated by 1.25 ± 0.005 in. (32 ± 0.13 mm). The dual electrode sheaves are adjusted to an angle resulting in 1.0 +0, −0.1 in. (25.4 +0, −2.5 mm) length of wire making contact with each electrode sheave. (See Fig. 8.)

AVA Documents
Document Sharing Hub

Full document details: ASTM D1676-17

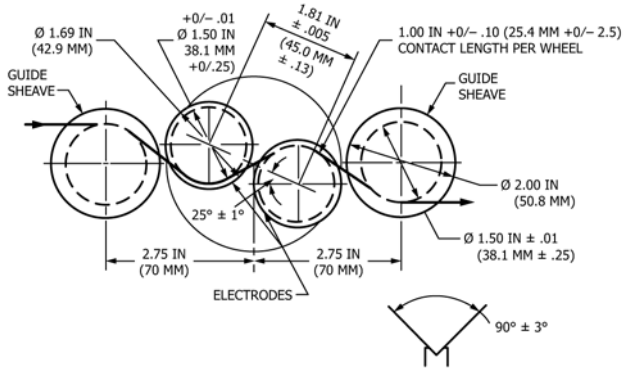

FIG. 7 Direct-Current High Voltage Continuity Electrodes for Wire Sizes 14 to 30 AWG 0.0641 to 0.010 in. (1.628 to 0.254 mm)

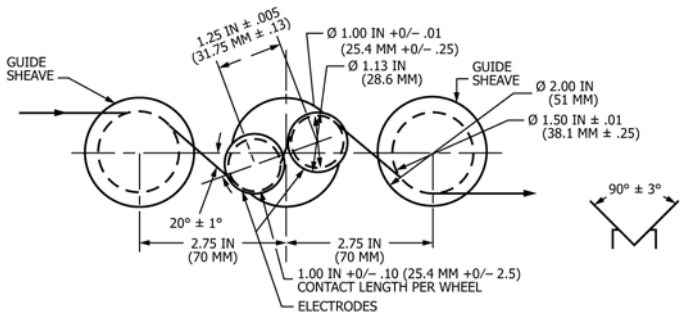

FIG. 8 Direct-Current High Voltage Continuity Electrodes for Wire Sizes 25 to 44 AWG 0.0179 to 0.0020 in. (0.455 to 0.051 mm)

42.5.4 For sizes AWG 25 to 30, either pair of high voltage dual electrode sheaves described above can be used.

42.6 *Ground Insulation for Electrode Sheaves*—The ground insulation for the electrode sheaves must be a high-resistivity material, nonhygroscopic and easily cleaned, and dimensioned so as to support a minimum of 3000 V direct current indefinitely. All edges of the electrode sheaves must be rounded to minimize corona.

42.7 *Damping Resistor*—A 0.25-W surge damping resistor of 4.7 MΩ ± 10 % must be installed in the high voltage line at the electrode sheaves connection. No shielding is used on the high voltage lead since a minimum capacitance to ground is sought during switching and counting events.

42.8 *Wire Handling Equipment*[4]—The test device includes such wire handling equipment as will provide the wire speed stipulated and is capable of handling wire sizes 14 through 44 AWG. A length indicator with a preset shutoff feature is included so that exact lengths are monitored. The drive motor must be of the brushless type and have sufficient power to maintain a speed pf 60 ± 3 ft (18 ± 1 m)/min under the heaviest load.

42.9 *Forced-Air Oven,* see Specification D5423.

43. Test Specimen

43.1 Ensure by visual inspection that the 100-ft (30-m) specimen of film-insulated magnet wire is undamaged and free from contamination.

44. Procedure

44.1 Thread the specimen through the equipment as depicted in Figs. 7 and 8. Connect the conductor to the grounded terminal or to a grounded take-up drum. Payoff equipment must be designed to prevent damage to the wire under test. Maintain the open circuit test voltage between the energized (positive polarity) electrode sheaves and the grounded conductor as indicated in Table 7.

44.2 When a referee test is required, dry a new wire specimen at 60 ± 3°C (140 ± 5°F) for 20 ± 5 min in a forced air oven, cool to room temperature, and test in accordance with the foregoing procedure.

45. Report

45.1 Report the following information:
45.1.1 Nominal size of conductor,
45.1.2 Type of conductor,
45.1.3 Build,
45.1.4 Insulation type,
45.1.5 Test voltage used, and
45.1.6 Number of faults per 100 ft (30 m).

46. Precision and Bias

46.1 This test method has been in use for many years, but no information has been presented to ASTM upon which to base a statement of precision. No activity is planned to develop such information.

46.2 This test method has no bias because the value for high dc voltage continuity is determined solely in terms of this method.

CONTINUITY, DC LOW VOLTAGE

47. Scope

47.1 This test method covers the evaluation of the continuity of insulation of film-insulated magnet wire 0.00176 in. (0.0447 mm) (AWG 45) and smaller in diameter, as detected by a dc voltage.

47.2 *This international standard was developed in accordance with internationally recognized principles on standardization established in the Decision on Principles for the Development of International Standards, Guides and Recommendations issued by the World Trade Organization Technical Barriers to Trade (TBT) Committee.*

TABLE 7 DC Volts ±5 %

AWG Size	Single	Heavy or Grade 1	Triple or Grade 2	Quadruple
Copper				
14 to 24	1000	1500	2000	2500
25 to 30	750	1000	1500	2000
31 to 35	500	750	1000	. . .
36 to 44	350	500	750	. . .
Aluminum				
14–24	750	1500	. . .	. . .
25–28	500	1000	. . .	. . .

AVA Documents
Document Sharing Hub

Full document details: ASTM D1676-17