This international standard was developed in accordance with internationally recognized principles on standardization established in the Decision on Principles for the Development of International Standards, Guides and Recommendations issued by the World Trade Organization Technical Barriers to Trade (TBT) Committee.

Designation: D2272 – 22

Standard Test Method for Oxidation Stability of Steam Turbine Oils by Rotating Pressure Vessel[1]

This standard is issued under the fixed designation D2272; the number immediately following the designation indicates the year of original adoption or, in the case of revision, the year of last revision. A number in parentheses indicates the year of last reapproval. A superscript epsilon (ε) indicates an editorial change since the last revision or reapproval.

This standard has been approved for use by agencies of the U.S. Department of Defense.

1. Scope*

1.1 This test method[2] utilizes an oxygen-pressured vessel to evaluate the oxidation stability of new and in-service turbine oils having the same composition (base stock and additives) in the presence of water and a copper catalyst coil at 150 °C.

1.2 Appendix X1 describes a new optional turbine oil (unused) sample nitrogen purge pretreatment procedure for determining the percent residual ratio of RPVOT value for the pretreated sample divided by RPVOT value of the new (untreated) oil, sometimes referred to as a "% RPVOT Retention." This nitrogen purge pretreatment approach was designed to detect volatile antioxidant inhibitors that are not desirable for use in high temperature gas turbines.

1.3 The values stated in SI units are to be regarded as standard. No other units of measurement are included in this standard.

1.3.1 *Exception*—Other units are provided in parentheses (psi, grams, and inches), because they are either the industry accepted standard or the apparatus is built according the figures in this standard, or both.

1.4 *This standard does not purport to address all of the safety concerns, if any, associated with its use. It is the responsibility of the user of this standard to establish appropriate safety, health, and environmental practices and determine the applicability of regulatory limitations prior to use.* For specific warning statements, see 6.2, 6.4, 6.5, 6.6, and 6.10.

1.5 *This international standard was developed in accordance with internationally recognized principles on standardization established in the Decision on Principles for the Development of International Standards, Guides and Recommendations issued by the World Trade Organization Technical Barriers to Trade (TBT) Committee.*

2. Referenced Documents

2.1 *ASTM Standards:*[3]

B1 Specification for Hard-Drawn Copper Wire

D943 Test Method for Oxidation Characteristics of Inhibited Mineral Oils

D1193 Specification for Reagent Water

D4742 Test Method for Oxidation Stability of Gasoline Automotive Engine Oils by Thin-Film Oxygen Uptake (TFOUT)

D6299 Practice for Applying Statistical Quality Assurance and Control Charting Techniques to Evaluate Analytical Measurement System Performance

2.2 *Energy Institute Standard:*[4]

IP 229 Determination of the Relative Oxidation Stability by Rotating Bomb of Mineral Turbine Oil

2.3 *ISO Standard:*[5]

ISO 3170 Petroleum Liquids—Manual Sampling

3. Summary of Test Method

3.1 The test oil, water, and copper catalyst coil, contained in a covered glass container, are placed in a vessel equipped with a pressure gauge. The vessel is charged with oxygen to a gauge pressure of 620 kPa (90 psi, 6.2 bar) (see Eq 1), placed in a constant-temperature oil bath set at 150 °C or dry block taken to 150 °C (Fig. 1 and Fig. 2), and rotated axially at 100 rpm at an angle of 30° from the horizontal.

3.2 The number of minutes required to reach a specific drop in gauge pressure is the oxidation stability of the test sample.

$$100\ \text{kPa} = 1.00\ \text{bar} = 14.5\ \text{psi} \quad (1)$$

[1] This test method is under the jurisdiction of ASTM Committee D02 on Petroleum Products, Liquid Fuels, and Lubricants and is the direct responsibility of Subcommittee D02.09.0C on Oxidation of Turbine Oils.

Current edition approved April 1, 2022. Published May 2022. Originally approved in 1964. Last previous edition approved in 2014 as D2272 – 14a. DOI: 10.1520/D2272-22.

[2] von Fuchs, G. H., Claridge, E. L., and Zuidema, H. H., "The Rotary Bomb Oxidation Test for Inhibited Turbine Oils," *Materials Research and Standards*, MTRSA (formerly ASTM Bulletin), No. 186, December 1952, pp. 43–46; von Fuchs, G. H., "Rotary Bomb Oxidation Test," *Lubrication Engineering*, Vol 16, No.1, January 1960, pp. 22–31.

[3] For referenced ASTM standards, visit the ASTM website, www.astm.org, or contact ASTM Customer Service at service@astm.org. For *Annual Book of ASTM Standards* volume information, refer to the standard's Document Summary page on the ASTM website.

[4] Available from Energy Institute, 61 New Cavendish St., London, WIG 7AR, U.K., http://www.energyinst.org.uk.

[5] Available from American National Standards Institute (ANSI), 25 W. 43rd St., 4th Floor, New York, NY 10036, http://www.ansi.org.

*A Summary of Changes section appears at the end of this standard

Copyright © ASTM International, 100 Barr Harbor Drive, PO Box C700, West Conshohocken, PA 19428-2959. United States

Documents
Document Sharing Hub
Full document details: ASTM D2272-22

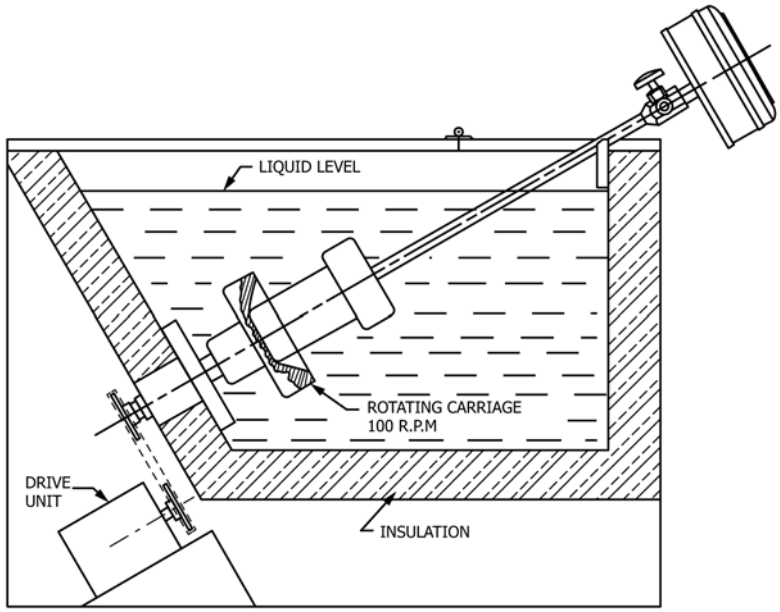

FIG. 1 Schematic Drawing of the Rotary Vessel Test Apparatus

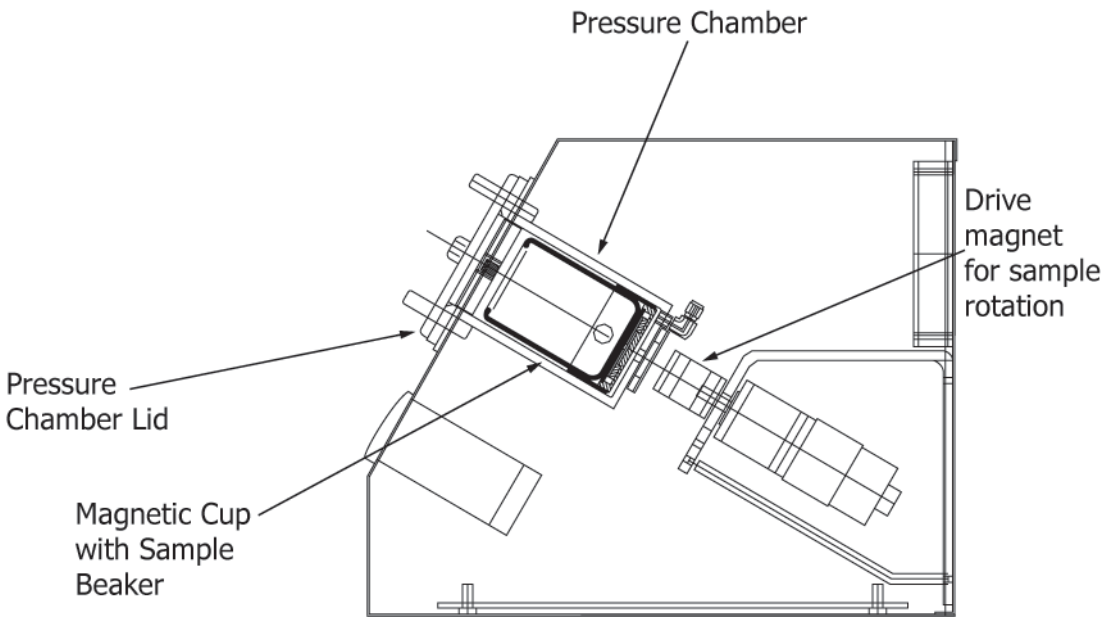

FIG. 2 RPVOT Metal Block Bath Instrument

4. Significance and Use

4.1 The estimate of oxidation stability is useful in controlling the continuity of this property for batch acceptance of production lots having the same operation. It is not intended that this test method be a substitute for Test Method D943 or be used to compare the service lives of new oils of different compositions.

4.2 This test method is also used to assess the remaining oxidation test life of in-service oils.

Method A

5. Apparatus

5.1 *Method A, Liquid Bath RPVOT*—Oxidation Vessel, Glass Sample Container with Four-Hole PTFE Disk, Hold-Down Spring, Catalyst-Coil, Pressure Gauge, Thermometer, and Test Bath as described in Annex A1. The assembled apparatus is shown schematically in Fig. 1 and Fig. A1.6.

AVA Documents
Document Sharing Hub

Full document details: ASTM D2272-22

5.2 *Method B, Dry Block Bath RPVOT*—See Section 13 for this additional option.

5.3 *Temperature Display*—The temperature shall have a displayed resolution to 0.1 °C or better and be calibrated as described in Annex A1 on an annual basis.

5.4 *Pressure Display*—The pressure readout, whether analog or digital, shall be calibrated as described in Annex A1.

6. Reagents and Materials

6.1 *Purity of Reagents*—Reagent grade chemicals shall be used in all tests in the final cleaning stages. Unless otherwise indicated, it is intended that all reagents conform to the specifications of the Committee on Analytical Reagents of the American Chemical Society where such specifications are available.[6] Other grades may be used, provided it is first ascertained that the reagent is of sufficiently high purity to permit its use without lessening the accuracy of the determination.

6.2 *Isopropyl Alcohol,* reagent grade. (**Warning**—Flammable. Health hazard.)

6.3 *Liquid Detergent.*

6.4 *n-Heptane,* 99.0 minimum mol % (pure grade). (**Warning**—Flammable. Health hazard.)

6.5 *Oxygen,* 99.5 %, with pressure regulation to 620 kPa (90 psi, 6.2 bar). (**Warning**—Vigorously accelerates combustion.)

6.6 *Potassium Hydroxide, Alcohol Solution (1 %)*—Dissolve 12 g of potassium hydroxide (KOH) pellets in 1 L of the isopropyl alcohol. (**Warning**—Flammable. Health hazard.)

6.7 *Silicone Carbide Abrasive Cloth,* 100-grit with cloth backing.

6.8 *Silicone Stopcock Grease.*

6.9 *Wire Catalyst, Electrolytic Copper Wire,* 1.63 mm ± 1 % (0.064 in. ± 1 %) in diameter (No. 16 Imperial Standard Wire Gauge or No. 14 American Wire Gauge, 99.9 % purity, conforming to Specification B1. Soft copper wire of an equivalent grade may also be used.

6.10 *Acetone,* reagent grade. (**Warning**—Flammable. Health hazard.)

6.11 *Reagent Water,* conforming to Specification D1193, Type II.

7. Sampling

7.1 Samples for this test method can come from tanks, drums, small containers, or even operating equipment. As the results obtained by this method are readily affected by traces of impurities, avoid contamination during sampling and subsequent handling; especially for used fluids. Samples shall be prepared and decanted in accordance with the procedures given in ISO 3170 and stored away from light in dark colored bottles.

8. Preparation of Apparatus

8.1 *Catalyst Preparation*—Before use, polish approximately 3 m of the copper wire with a silicon carbide abrasive cloth and wipe free from abrasives with a clean, dry cloth. Wind the wire into a coil having an outside diameter 44 mm to 48 mm and weight of 55.6 g ± 0.3 g and stretched to a height of 40 mm to 42 mm. Clean the coil thoroughly with isopropyl alcohol, air-dry, and insert inside the glass sample container by a turning motion, if necessary. A new coil is used for each sample. For extended storage, the prepared coil may be packaged in a dry, inert atmosphere. For overnight storage (less than 24 h), the coils may be stored in *n*-Heptane.

NOTE 1—Commercially available and prepackaged coils prepared as described in 8.1 can also be used for the test.[7]

8.2 *Cleaning of Vessel*—Wash the vessel body, cap, and inside of vessel stem with a suitable solvent (for example, petroleum spirit, heptane, or acetone.) Wash with hot detergent solution and rinse thoroughly with water. Rinse the inside of the stem with isopropyl alcohol and blow dry with clean compressed air. Keep the plastic valve out of the hot detergent to prevent its deterioration. Failure to remove oxidation residue can adversely affect test results.

8.3 *Cleaning of Glass Container*—Drain and rinse with a suitable solvent (for example, non-reagent petroleum spirit, heptane, or acetone). Soak or scrub in an aqueous detergent solution. Brush thoroughly and flush thoroughly with tap water. Rinse with isopropyl alcohol, followed by distilled water and air dry. If any insolubles remain, soak overnight in an acid-type cleaning solution and repeat the above procedure starting from the tap water flush. Do not use chipped or cracked glassware.

8.4 *Cleaning of Polytetrafluoroethylene (PTFE) Disk*—Remove any residual oil with a suitable solvent and clean by brushing with detergent solution. Rinse thoroughly with tap water, followed by distilled water rinse and air dry.

9. Procedure

9.1 *Charging*—Weigh the glass sample container with a freshly cleaned catalyst coil. Weigh 50 g ± 0.5 g of oil sample into the container; also add 5 mL of reagent water. Add another 5 mL of reagent water to the vessel body and slide the sample container into the vessel body (see Note 2). Cover the glass container with a 57.2 mm (2 ¼ in.) PTFE disk and place a hold-down spring[8] on top of the PTFE disk. Apply a thin coating of silicone stopcock grease to the O-ring vessel seal located in the gasket groove of the vessel cap to provide lubrication, and insert the cap into the vessel body.

NOTE 2—The water between the vessel wall and the sample container aids heat transfer.

9.1.1 Tighten the closure ring by hand. Cover the threads of the gauge-nipple with a thin coating of stopcock grease (PTFE

[6] *ACS Reagent Chemicals, Specifications and Procedures for Reagents and Standard-Grade Reference Materials*, American Chemical Society, Washington, DC. For suggestions on the testing of reagents not listed by the American Chemical Society, see *Analar Standards for Laboratory Chemicals*, BDH Ltd., Poole, Dorset, U.K., and the *United States Pharmacopeia and National Formulary*, U.S. Pharmacopeial Convention, Inc. (USPC), Rockville, MD.

[7] Prepackaged coils were provided for RR:D02-1409.

[8] PTFE disk with 4-holes and hold down spring were provided for RR:D02-1409.

AVA Documents Document Sharing Hub

Full document details: ASTM D2272-22

pipe tape is a suitable alternative to the use of stopcock grease) and screw the gauge into the top center of the vessel stem. Attach the oxygen line with an inline pressure gauge to the inlet valve on the vessel stem. Slowly turn on the oxygen supply valve until the pressure has reached 620 kPa (90 psi, 6.2 bar). Turn off the oxygen supply valve. Slowly release pressure by loosening the fitting or by using an inline bleeder valve. Repeat purging process two more times; purge step should take approximately 3 min. Adjust the regulating valve on the oxygen supply tank to 620 kPa ± 1.4 kPa (90 psi, 6.2 bar) at a room temperature of 25 °C (77 °F). For each 2.0 °C (3.6 °F) above or below this temperature, 5 kPa (0.7 psi, 0.05 bar) shall be added or subtracted to attain the required initial pressure. Fill the vessel to this required pressure and close the inlet valve securely by hand. Open the pressure valve one more time and watch the pressure gauge to make certain it is not decreasing. If not, then close the valve. If desired, test the vessel for leaks by immersing in water (see Note 3).

NOTE 3—If the vessel was immersed in water to check for leaks, dry the outside of the wet vessel by any convenient means such as airblast or a towel. Such drying is advisable to prevent subsequent introduction of free water into the hot oil bath which would cause sputtering. For safety purposes, a face shield is recommended during the charging process.

9.2 *Oxidation*—Bring the heating bath to the test temperature while the stirrer is in operation. Switch off stirrer, insert the vessel into the carriages, and note the time. Restart the stirrer. If an auxiliary heater is used, keep it on for the first 5 min of the run and then turn it off (see Note 4). The bath temperature shall stabilize at the test temperature within 15 min after the vessel is inserted. Maintain the test temperature within ±0.1 °C (see Note 5).

NOTE 4—The time for the bath to reach the operating temperature after insertion of the vessel may differ for different apparatus assemblies and should be observed for each unit. The objective is to find a set of conditions that does not permit a drop of more than 2 °C after insertion of the vessel and allows the vessel pressure to reach a plateau within 30 min as shown in Curve A of Fig. 3.

NOTE 5—Maintaining the correct temperature within the specified limits of ± 0.1 °C during the entire test run is an important factor assuring both repeatability and reproducibility of test results.

9.3 Keep the vessel completely submerged and maintain continuous and uniform rotation throughout the test. A standard rotational speed of 100 rpm ± 5 rpm is required; any appreciable variations in this speed could cause erratic results.

9.4 The test is complete after the pressure drops more than 175 kPa (25.4 psi, 1.75 bar) below the maximum pressure (see Note 6). The pressure drop usually, but not always, coincides with an induction-type *period of rapid pressure drop*. When it does not, the operator may question whether he has produced a valid experiment (see Note 7). Two additional reports may be provided: Option A at 345 kPa (50 psi, 3.44 bar) drop below the maximum pressure and Option B reporting the total pressure drop after 1440 min.

NOTE 6—While termination of the test at a 175 kPa (25.4 psi, 1.75 bar) pressure drop is the standard procedure, some operators may elect to stop the test at other pressure drops, such as 345 kPa (50 psi, 3.45 bar), to observe the condition of the oil after a predetermined test period. Another example is 100 min or 1440 min. When each of these are within the normal induction period of new inhibited oils.

NOTE 7—A typical experiment is shown in Fig. 3 as Curve A. The maximum pressure is expected to be reached by 30 min, a pressure plateau is established, and an induction-type pressure drop is observed. Curve B, in which there is a gradual decrease in pressure before the induction break is recorded, is more difficult to evaluate. The gradual decrease in pressure could be due to a vessel leak, although some synthetic fluids will generate this type of curve. If a leak is suspected, repeat the test in a different vessel. If the same type of curve is derived when the test is repeated, the experiment is likely valid.

9.5 After termination of the test, the vessel shall be removed from the oil bath and cooled to room temperature. The vessel can be briefly dipped into and swirled around in a bath of light mineral oil to wash off the adhering bath oil. The vessel is rinsed off with hot water, then immersed into cold water to quickly bring it to room temperature. Alternately, the vessel

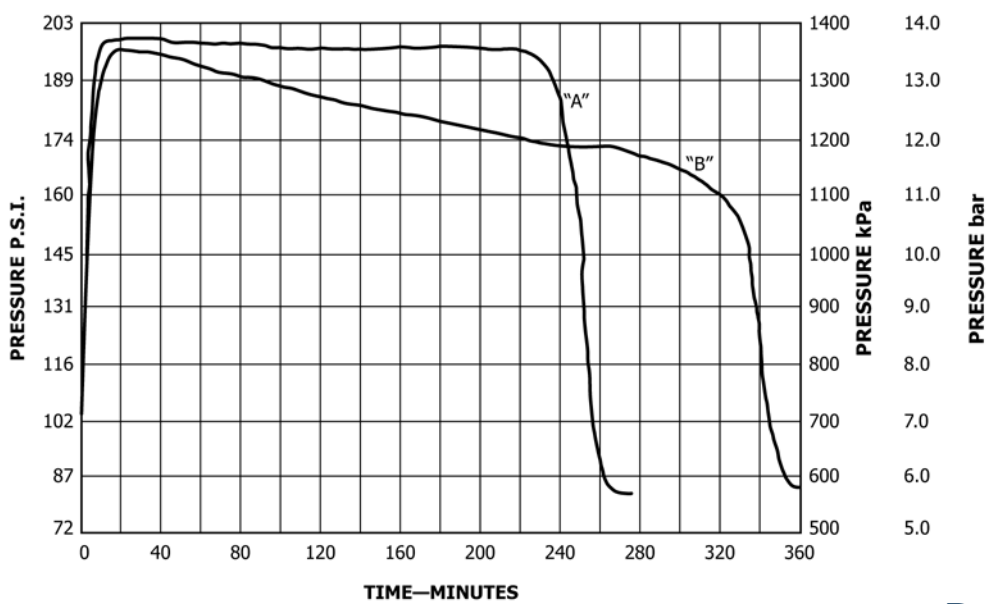

FIG. 3 Pressure Versus Times Plot of Two Rotary Vessel Oxidation Test Runs

Documents
Document Sharing Hub
Full document details: ASTM D2272-22

can be cooled to room temperature in air. The excess oxygen pressure is bled off and the vessel opened.

10. Quality Control Monitoring

10.1 The performance of the equipment should be confirmed by analyzing quality control (QC) sample(s).

10.2 Prior to monitoring the measurement process, determine the average value and control limits for the QC sample.

10.3 Record QC results and analyze by control charts or other statistically equivalent techniques to ascertain the statistical control status of the total test process. Investigate any *out of control* data for root cause(s).

10.4 The frequency of QC testing is dependent on the criticality of the measurement, the demonstrated stability of the testing process, and customer requirements. The QC sample testing precision should be periodically checked against the expected test precision to ensure data quality.

10.5 It is recommended that, if possible, the type of QC sample that is regularly tested be representative of the samples routinely analyzed. An ample supply of QC sample material should be available for the intended period of use and shall be homogenous and stable under the anticipated storage conditions.

10.6 See Practice D6299 and MNL 7[9] for further guidance on quality control monitoring.

11. Report

11.1 *Interpretation of Results:*

11.1.1 Observe the plot of the recorded pressure versus time and establish the maximum pressure (see Note 7). Record the time at the point on the falling part of the curve where the pressure is 175 kPa (25.4 psi, 1.75 bar) less than the maximum pressure. If the test is repeated, the maximum pressures in repeat tests should not differ by more than 35 kPa (5.1 psi, 0.35 bar). If desired, Option A and/or Option B shown below may also be recorded.

11.2 *Report the Results:*

11.2.1 *The Standard Report*—The life of the sample is the time in minutes from the start of the test to a 175 kPa (25.4 psi, 1.75 bar) pressure drop from the maximum pressure.

11.2.2 *Option A*—If desired, report Option A as the life of the sample is the time in minutes from the start of the test to a 345 kPa (50 psi, 3.45 bar) pressure drop from the maximum pressure. If the test is repeated, the maximum pressures in repeat tests should not differ by more than 35 kPa (5.1 psi, 0.35 bar).

11.2.3 *Option B*—If desired, report Option B as the change in pressure, kPa, from maximum pressure to 1440 min from the start of the test. If the test is repeated, the maximum pressures in repeat tests should not differ by more than 35 kPa (5.1 psi, 0.35 bar).

11.2.4 Report the method used: Method A or Method B.

11.2.5 If requested, and if a sharp change in pressure is observed, report the time to break in minutes.

NOTE 8—In reporting test results, it is recommended that it be indicated whether tests were made with stainless steel or chrome-plate copper vessels.

12. Precision and Bias[10]

12.1 *Standard Report*—The precision and bias statement for the standard report is generated from the research report (95 % confidence) for the 175 kPa (25.4 psi, 1.75 bar) pressure drop from maximum pressure. The data range of results in RR:D02-1777[11] is from approximately 200 min to 3000 min.

12.1.1 *Repeatability*—The difference between successive test results obtained by the same operator with the same apparatus under constant operating conditions on identical test material, would in the long run, in the normal and correct operation of the test method, exceed the following values only in one case in twenty:

$$0.15 \cdot X^{1.02} \text{ minutes} \quad (2)$$

where:

X = denotes mean value.

12.1.2 *Reproducibility*—The difference between two single and independent results obtained by different operators working in different laboratories on identical test material, would in the long run, in the normal and correct operation of the test method, exceed the following values only in one case in twenty:

$$0.2 \cdot X^{1.02} \text{ minutes} \quad (3)$$

where:

X = denotes mean value.

NOTE 9—This precision statement was prepared with data on seven oils (an uninhibited base oil and three new and three used steam turbine oils) tested by eleven cooperators. The oils covered values in the ranges from approximately 200 min to 3000 min.

12.2 *Bias*—There being no criteria for measuring bias in these test-product combinations, no statement of bias can be made.

12.3 *Option A*—The precision and bias statement for Option A below is generated from the research report (95 % confidence) for the 345 kPa (50 psi, 3.45 bar) pressure drop from the maximum pressure. The data range of results in RR:D02-2030[12] is from approximately 200 min to 3000 min. No precision report for Option B is provided at this time.

12.3.1 *Repeatability*—The difference between two independent results obtained by the same operator in a given laboratory applying the same test method with the same apparatus under constant operating conditions on identical test material within

[9] MNL7, *Manual on Presentation of Data and Control Chart Analysis*, 6th edition, ASTM International.

[10] Supporting data have been filed at ASTM International Headquarters and may be obtained by requesting Research Report RR:D02-1409. Contact ASTM Customer Service at service@astm.org.

[11] Supporting data have been filed at ASTM International Headquarters and may be obtained by requesting Research Report RR:D02-1777. Contact ASTM Customer Service at service@astm.org.

[12] Supporting data have been filed at ASTM International Headquarters and may be obtained by requesting Research Report RR:D02-2030. Contact ASTM Customer Service at service@astm.org.

AVA Documents
Document Sharing Hub

Full document details: ASTM D2272-22

short intervals of time would exceed the following value about 5 % of the time (one case in 20 in the long run) in the normal and correct operation of the test method:

$$0.053 \cdot X^{1.23} \text{ minutes} \quad (4)$$

where X is the average of the two results.

12.3.2 *Reproducibility*—The difference between two single and independent results obtained by different operators applying the same test method in different laboratories using different apparatus on identical test material would exceed the following value about 5 % of the time (one case in 20 in the long run) in the normal and correct operation of the test method:

$$0.09 \cdot X^{1.23} \text{ minutes} \quad (5)$$

where X is the average of the two results.

NOTE 10—The precision statement for Option A report was prepared with data on seven oils (an uninhibited base oil and three new and three used steam turbine oils) tested by eleven cooperators. The oils covered values in the ranges from approximately 200 min to 3000 min.

12.4 *Bias*—There being no criteria for measuring bias for Option A report in these test-product combinations, no statement of bias can be made.

Method B

13. Apparatus

13.1 *Method B, Dry Block Bath RPVOT*[13]—Dry Oxidation Chamber, Glass Sample Container with PTFE Disk/PEEK (polyether ether ketone) Foot, Catalyst-Coil, Temperature and Pressure Gauge, unit as described in Annex A2. The assembled apparatus is shown schematically and pictorially in Fig. 2, Fig. A2.1, and Fig. A2.2.

13.2 *Temperature Display*—The temperature shall have a displayed resolution to 0.1 °C or better and be calibrated as described in Annex A2 on an annual basis.

13.3 *Pressure Display*—The digital pressure readout shall be calibrated as described in Annex A2.

14. Reagents and Materials

14.1 *Purity of Reagents*—Reagent grade chemicals shall be used in all tests. Unless otherwise indicated, it is intended that all reagents conform to the specifications of the Committee on Analytical Reagents of the American Chemical Society where such specifications are available.[6] Other grades may be used, provided it is first ascertained that the reagent is of sufficiently high purity to permit its use without lessening the accuracy of the determination.

14.2 *Isopropyl Alcohol,* reagent grade. (**Warning**—Flammable. Health hazard.)

14.3 *Varclean Varnish Remover.*[13]

14.4 *n-Heptane,* 99.0 minimum mol % (pure grade). (**Warning**—Flammable. Health hazard.)

14.5 *Oxygen,* 99.5 %, with pressure regulation to 620 kPa (90 psi, 6.2 bar). (**Warning**—Vigorously accelerates combustion.)

14.6 *Potassium Hydroxide, Alcohol Solution (1 %)*—Dissolve 12 g of potassium hydroxide (KOH) pellets in 1 L of the isopropyl alcohol. (**Warning**—Flammable. Health hazard.)

14.7 *Silicone Carbide Abrasive Cloth,* 100-grit with cloth backing.

14.8 *Methanol*—denatured.

14.9 *Wire Catalyst, Electrolytic Copper Wire,* 1.63 mm ± 1 % (0.064 in. ± 1 %) in diameter (No. 16 Imperial Standard Wire Gauge or No. 14 American Wire Gauge, 99.9 % purity, conforming to Specification B1. Soft copper wire of an equivalent grade may also be used.

14.10 *Cyclo-Hexane,* (**Warning**—Flammable. Health hazard.)

14.11 *Reagent Water,* conforming to Specification D1193, Type II.

15. Sampling

15.1 Samples for this test method can come from tanks, drums, small containers, or even operating equipment. As the results obtained by this method are readily affected by traces of impurities, avoid contamination during sampling and subsequent handling; especially for used fluids. Samples shall be prepared and decanted in accordance with the procedures given in ISO 3170 and stored away from light in dark colored bottles.

16. Preparation of Apparatus

16.1 *Catalyst Preparation*—Before use, polish approximately 3 m of the copper wire with a silicon carbide abrasive cloth and wipe free from abrasives with a clean, dry cloth. Wind the wire into a coil having an outside diameter 44 mm to 48 mm and weight of 55.6 g ± 0.3 g and stretched to a height of 40 mm to 42 mm. Clean the coil thoroughly with isopropyl alcohol, air-dry, and insert inside the glass sample container by a turning motion, if necessary. A new coil is used for each sample. For extended storage, the prepared coil may be packaged in a dry, inert atmosphere. For overnight storage (less than 24 h), the coils may be stored in n-Heptane or cyclo-Hexane.

NOTE 11—Commercially available and prepackaged coils prepared as described in 8.1 can also be used for the test.[7]

16.2 *Cleaning of Pressure Chamber*—After a test is completed, remove any deposits from inside of the chamber by using the forceps and the cleaning pad to scrub off the deposits. Spray clean cold water down the walls of the chamber using the aspiration cleaning bottle until the water level almost reaches the oxygen inlet hole in the upper bottom of the chamber. After a few minutes, use the empty aspiration cleaning bottle to remove the water mixture by compressing the bottle then dip the water extraction tube on the bottle into the water and release the compression. Varclean[13] can be used for difficult deposits. Rinse the chamber several times with water and one final rinse with methanol. Dispose of the water

[13] The sole source of supply of the apparatus known to the committee at this time is Tannas Company, 4800 James Savage Rd., Midland, MI 48642. If you are aware of alternative suppliers, please provide this information to ASTM International Headquarters. Your comments will receive careful consideration at a meeting of the responsible technical committee,[1] which you may attend.

AVA Documents Document Sharing Hub

Full document details: ASTM D2272-22

has been removed from the oxygen inlet, press the oxygen fill valve several times to blow out any water. Dry the inside with a paper towel.

16.3 *Cleaning of Glass Container*—Drain and rinse with a suitable solvent (for example, cyclo-hexane or acetone). Soak or scrub in a Varclean[13] solution. Brush thoroughly and flush thoroughly with tap water. Rinse with isopropyl alcohol, followed by distilled water and air dry. If any insolubles remain, soak overnight in Varclean[13] and repeat the above procedure.

16.4 *Cleaning of Polytetrafluoroethylene (PTFE) Disk/ PEEK Foot, Magnetic Cup and Spring Clip*—Remove any residual oil with a suitable solvent and clean by brushing with Varclean.[13] Rinse thoroughly with tap water, followed by distilled water rinse and air dry.

17. Procedure

17.1 *Setup*—Weigh the glass sample beaker with a freshly cleaned catalyst coil. Weigh 50 g ± 0.5 g of oil sample into the container; also add 5 mL of reagent water into the beaker. Place the sample beaker and spring clip into the magnetic cup. Make sure the anti-friction ring on the magnetic cup is not discolored. If so, it must be replaced according the operators manual. The spring clip should hold the cup so that it does not spin freely. Cover the glass container with the PTFE beaker cover. Add another 5 mL of reagent water to the vessel body and slide the magnetic cup with sample container into the pressure chamber. Place a new O-ring onto the chamber lid and place onto the pressure chamber.

NOTE 12—The water between the vessel wall and the sample container aids heat transfer.

17.1.1 Tighten the chamber lid by screwing on the three knurled nuts in stages so the lid is securely in place and evenly gapped between the lid and the pressure chamber flange all around. Press the oxygen inlet valve until the pressure has reached at least 620 kPa (90 psi, 6.2 bar). Turn off the oxygen supply valve. Slowly release pressure by loosening the oxygen vent valve. Repeat purging process two more times; purge step should take approximately 3 min. Adjust the regulating valve on the oxygen supply tank to 620 kPa ± 1.4 kPa (90 psi, 6.2 bar) at a room temperature of 25 °C (77 °F). For each 2.0 °C (3.6 °F) above or below this temperature, 5 kPa (0.7 psi, 0.05 bar) shall be added or subtracted to attain the required initial pressure. Fill the vessel to this required pressure and close the inlet valve securely by hand.

NOTE 13— If desired, test the vessel for leaks by pressurizing an empty chamber, heat to 150 °C and monitor overnight for a pressure drop. If the vessel drops more than 2 psi from the maximum with a dry chamber, contact the manufacturer for further instructions.

17.2 *Oxidation*—At this point, make sure the recording device is prepared and started. Place the PTFE lid cover over the pressure chamber lid. Turn on the motor switch to begin the rotation of the sample and then turn on the heat switch on the front of the console. Make sure the temperature controller is set for 150 °C and maintains temperature stability within ±0.1 °C after stabilization.

NOTE 14—Leaving off the PTFE lid cover will invalidate the test.

NOTE 15—Maintaining the correct temperature within the specified limits of ±0.1 °C during the entire test run is an important factor assuring both repeatability and reproducibility of test results.

17.3 The test is complete after the pressure drops more than 175 kPa (25.4 psi, 1.75 bar) below the maximum pressure (see Note 7). The pressure drop usually, but not always, coincides with an induction-type period of rapid pressure drop. When it does not, the operator may question whether he has produced a valid experiment (see Note 7). Two additional reports may be provided: Option A at 345 kPa (50 psi, 3.44 bar) drop below the maximum pressure and Option B reporting the total pressure drop after 1440 min.

NOTE 16—While termination of the test at a 175 kPa (25 psi, 1.75 bar) pressure drop is the standard procedure, some operators may elect to stop the test at other pressure drops, such as 345 kPa (50 psi, 3.45 bar), to observe the condition of the oil after a predetermined test period. Another example is 100 min or 1440 min. When each of these are within the normal induction period of new inhibited oils.

NOTE 17—A typical experiment is shown in Fig. 3 as Curve A. The maximum pressure is expected to be reached by approximately 30 min, a pressure plateau is established, and an induction-type pressure drop is observed. Curve B, in which there is a gradual decrease in pressure before the induction break is recorded, is more difficult to evaluate. The gradual decrease in pressure could be due to a vessel leak, although some synthetic fluids will generate this type of curve. If a leak is suspected, repeat the test in a different vessel. If the same type of curve is derived when the test is repeated, the experiment is likely valid.

17.4 After termination of the test, remove the PTFE lid cover to allow the unit to cool more rapidly. If the auto-shut-off feature is activated, the metal block bath instrument will automatically turn off the heat and magnetic drive motor. For manual operation, turn off the heat and drive motor switches.

17.5 When the safe-opening indicator light is green, first slowly open the oxygen vent valve to release the pressure at a rate of 5 psi per second or lower. Then remove the knurled lid nuts and screw the lid removal tool into the lid removal port to remove the relatively hot chamber lid.

17.6 Using the removal tool, remove the PTFE lid and then reach in to the chamber and remove the magnetic cup containing the glass sample beaker. Sometimes the beaker cover or the beaker comes out without the cup. If this is the case, then use the tongs to go back to get the magnetic cup.

17.7 Clean the apparatus according to Section 16.

18. Quality Control Monitoring

18.1 The performance of the equipment should be confirmed by analyzing quality control (QC) sample(s).

18.2 Prior to monitoring the measurement process, determine the average value and control limits for the QC sample.

18.3 Record QC results and analyze by control charts or other statistically equivalent techniques to ascertain the statistical control status of the total test process. Investigate any *out of control* data for root cause(s).

18.4 The frequency of QC testing is dependent on the criticality of the measurement, the demonstrated stability of the testing process, and customer requirements. The QC sample testing precision should be periodically checked against the expected test precision to ensure data quality.

AVA Documents
Document Sharing Hub

Full document details: ASTM D2272-22