This international standard was developed in accordance with internationally recognized principles on standardization established in the Decision on Principles for the Development of International Standards, Guides and Recommendations issued by the World Trade Organization Technical Barriers to Trade (TBT) Committee.

Designation: D2699 – 24a

Standard Test Method for Research Octane Number of Spark-Ignition Engine Fuel[1]

This standard is issued under the fixed designation D2699; the number immediately following the designation indicates the year of original adoption or, in the case of revision, the year of last revision. A number in parentheses indicates the year of last reapproval. A superscript epsilon (ε) indicates an editorial change since the last revision or reapproval.

This standard has been approved for use by agencies of the U.S. Department of Defense.

1. Scope*

1.1 This laboratory test method covers the quantitative determination of the knock rating of liquid spark-ignition engine fuel in terms of Research O.N., including fuels that contain up to 25 % v/v of ethanol. However, this test method may not be applicable to fuel and fuel components that are primarily oxygenates.[2] The sample fuel is tested using a standardized single cylinder, four-stroke cycle, variable compression ratio, carbureted, CFR engine run in accordance with a defined set of operating conditions. The O.N. scale is defined by the volumetric composition of PRF blends. The sample fuel knock intensity is compared to that of one or more PRF blends. The O.N. of the PRF blend that matches the K.I. of the sample fuel establishes the Research O.N.

1.2 The O.N. scale covers the range from 0 to 120 octane number but this test method has a working range from 40 to 120 Research O.N. Typical commercial fuels produced for spark-ignition engines rate in the 88 to 101 Research O.N. range. Testing of gasoline blend stocks or other process stream materials can produce ratings at various levels throughout the Research O.N. range.

1.3 The values of operating conditions are stated in SI units and are considered standard. The values in parentheses are the historical inch-pound units. The standardized CFR engine measurements continue to be in inch-pound units only because of the extensive and expensive tooling that has been created for this equipment.

1.4 For purposes of determining conformance with all specified limits in this standard, an observed value or a calculated value shall be rounded "to the nearest unit" in the last right-hand digit used in expressing the specified limit, in accordance with the rounding method of Practice E29.

1.5 *This standard does not purport to address all of the safety concerns, if any, associated with its use. It is the responsibility of the user of this standard to establish appropriate safety, health, and environmental practices and determine the applicability of regulatory limitations prior to use.* For specific warning statements, see Section 8, 14.4.1, 15.5.1, 16.6.1, Annex A1, A2.2.3.1, A2.2.3.3 (*6*) and (*9*), A2.3.5, X3.3.7, X4.2.3.1, X4.3.4.1, X4.3.9.3, X4.3.11.4, and X4.5.1.8.

1.6 *This international standard was developed in accordance with internationally recognized principles on standardization established in the Decision on Principles for the Development of International Standards, Guides and Recommendations issued by the World Trade Organization Technical Barriers to Trade (TBT) Committee.*

2. Referenced Documents

2.1 *ASTM Standards:*[3]

D1193 Specification for Reagent Water

D2268 Test Method for Analysis of High-Purity *n*-Heptane and *Iso*octane by Capillary Gas Chromatography

D2700 Test Method for Motor Octane Number of Spark-Ignition Engine Fuel

D2885 Test Method for Determination of Octane Number of Spark-Ignition Engine Fuels by On-Line Direct Comparison Technique

D3703 Test Method for Hydroperoxide Number of Aviation Turbine Fuels, Gasoline and Diesel Fuels

D4057 Practice for Manual Sampling of Petroleum and Petroleum Products

D4175 Terminology Relating to Petroleum Products, Liquid Fuels, and Lubricants

D4177 Practice for Automatic Sampling of Petroleum and Petroleum Products

D4814 Specification for Automotive Spark-Ignition Engine Fuel

D5842 Practice for Sampling and Handling of Fuels for Volatility Measurement

[1] This test method is under the jurisdiction of ASTM Committee D02 on Petroleum Products, Liquid Fuels, and Lubricants and is the direct responsibility of Subcommittee D02.01 on Combustion Characteristics.

Current edition approved May 1, 2024. Published May 2024. Originally approved in 1968. Last previous edition approved in 2024 as D2699 – 24. DOI: 10.1520/D2699-24A.

[2] Motor O.N., determined using Test Method D2700, is a companion method to provide a similar but typically lower octane rating under more severe operating conditions.

[3] For referenced ASTM standards, visit the ASTM website, www.astm.org, or contact ASTM Customer Service at service@astm.org. For *Annual Book of ASTM Standards* volume information, refer to the standard's Document Summary page on the ASTM website.

*A Summary of Changes section appears at the end of this standard

Copyright © ASTM International, 100 Barr Harbor Drive, PO Box C700, West Conshohocken, PA 19428-2959. United States

Documents
Document Sharing Hub
Full document details: ASTM D2699-24a

D6299 Practice for Applying Statistical Quality Assurance and Control Charting Techniques to Evaluate Analytical Measurement System Performance
D6300 Practice for Determination of Precision and Bias Data for Use in Test Methods for Petroleum Products, Liquid Fuels, and Lubricants
D6304 Test Method for Determination of Water in Petroleum Products, Lubricating Oils, and Additives by Coulometric Karl Fischer Titration
D6708 Practice for Statistical Assessment and Improvement of Expected Agreement Between Two Test Methods that Purport to Measure the Same Property of a Material
D7504 Test Method for Trace Impurities in Monocyclic Aromatic Hydrocarbons by Gas Chromatography and Effective Carbon Number
E29 Practice for Using Significant Digits in Test Data to Determine Conformance with Specifications
E344 Terminology Relating to Thermometry and Hydrometry
E456 Terminology Relating to Quality and Statistics
E542 Practice for Gravimetric Calibration of Laboratory Volumetric Instruments
E1064 Test Method for Water in Organic Liquids by Coulometric Karl Fischer Titration

2.2 *ANSI Standard:*[4]
C-39.1 Requirements for Electrical Analog Indicating Instruments

2.3 *Energy Institute Standard:*[5]
IP 224/02 Determination of Low Lead Content of Light Petroleum Distillates by Dithizone Extraction and Colorimetric Method

3. Terminology

3.1 *Definitions:*

3.1.1 *accepted reference value, n*—a value that serves as an agreed-upon reference for comparison, and which is derived as: (*1*) a theoretical or established value, based on scientific principles, (*2*) an assigned or certified value, based on experimental work of some national or international organization, or (*3*) a consensus or certified value, based on collaborative experimental work under the auspices of a scientific or engineering group. **E456**

3.1.1.1 *Discussion*—In the context of this test method, accepted reference value is understood to apply to the Research octane number of specific reference materials determined empirically under reproducibility conditions by the National Exchange Group or another recognized exchange testing organization.

3.1.2 *Check Fuel, n—for quality control testing*, a spark-ignition engine fuels of selected characteristics having an octane number accepted reference value ($O.N._{ARV}$) determined by round-robin testing under reproducibility conditions.

3.1.3 *cylinder height, n—for the CFR engine*, the relative vertical position of the engine cylinder with respect to the piston at top dead center (tdc) or the top machined surface of the crankcase.

3.1.3.1 *digital counter reading, n—for the CFR engine*, a numerical indication of cylinder height, indexed to a basic setting at a prescribed compression pressure when the engine is motored.

3.1.3.2 *dial indicator reading, n—for the CFR engine*, a numerical indication of cylinder height, in thousandths of an inch, indexed to a basic setting at a prescribed compression pressure when the engine is motored.

3.1.4 *detonation meter, analog, n—for knock testing*, the signal conditioning instrumentation that accepts the electrical signal from the detonation pickup and provides an analog output signal to the analog knockmeter.

3.1.4.1 *Discussion*—In the context of this test method, three contemporary generations of apparatus have been developed as detonation meters. These are (year of introduction in parenthesis): the 501T Detonation Meter (1969), the 501C Detonation Meter (1979), and the SSD7000 Detonation Meter (2017).[6]

3.1.5 *detonation meter, digital, n—for knock testing*, the digital signal conditioning instrumentation that accepts the electrical signal from the detonation pickup and provides a digital output for display.

3.1.6 *detonation pickup, n—for knock testing*, a magnetostrictive-type transducer that threads into the engine cylinder and is exposed to combustion chamber pressure to provide an electrical signal that is proportional to the rate-of-change of cylinder pressure.

3.1.7 *dynamic fuel level, n—for knock testing*, test procedure in which the fuel-air ratio for maximum knock intensity for sample and reference fuels is determined using the falling level technique that changes carburetor fuel level from a high or rich mixture condition to a low or lean mixture condition, at a constant rate, causing knock intensity to rise to a maximum and then decrease, thus permitting observation of the maximum knockmeter reading.

3.1.8 *equilibrium fuel level, n—for knock testing*, test procedure in which the fuel-air ratio for maximum knock intensity for sample and reference fuels is determined by making incremental step changes in fuel-air ratio, observing the equilibrium knock intensity for each step, and selecting the level that produces the highest knock intensity reading.

3.1.9 *firing, n—for the CFR engine*, operation of the CFR engine with fuel and ignition.

3.1.10 *fuel-air ratio for maximum knock intensity, n—for knock testing*, that proportion of fuel to air that produces the highest knock intensity for each fuel in the knock testing unit, provided this occurs within specified carburetor fuel level limits.

3.1.11 *guide tables, n—for knock testing*, the specific relationship between cylinder height (compression ratio) and

[4] Available from American National Standards Institute (ANSI), 25 W. 43rd St., 4th Floor, New York, NY 10036, http://www.ansi.org.

[5] Available from Energy Institute, 61 New Cavendish St., London, W1G 7AR, U.K., http://www.energyinst.org.

[6] Supporting data have been filed at ASTM International Headquarters and may be obtained by requesting Research Report RR:D02-1870. Contact ASTM Customer Service at service@astm.org.

AVA Documents
Document Sharing Hub

Full document details: ASTM D2699-24a

octane number at standard knock intensity for specific primary reference fuel blends tested at standard or other specified barometric pressure.

3.1.12 *knock, n—in a spark-ignition engine*, abnormal combustion, often producing audible sound, caused by autoignition of the air/fuel mixture. **D4175**

3.1.13 *knock intensity, n—for knock testing*, a measure of the level of knock.

3.1.14 *knockmeter, analog, n—for knock testing*, the 0 to 100 division analog indicating meter that displays the knock intensity signal from the analog detonation meter.

3.1.15 *knockmeter, digital, n—for knock testing*, the 0 to 999 division digital indicating meter that displays the knock intensity from the digital detonation meter.

3.1.16 *motoring, n—for the CFR engine*, operation of the CFR engine without fuel and with the ignition shut off.

3.1.17 *octane number, n—for spark-ignition engine fuel*, any one of several numerical indicators of resistance to knock obtained by comparison with reference fuels in standardized engine or vehicle tests. **D4175**

3.1.17.1 *research octane number, n—for spark-ignition engine fuel*, the numerical rating of knock resistance obtained by comparison of its knock intensity with that of primary reference fuel blends when both are tested in a standardized CFR engine operating under the conditions specified in this test method.

3.1.18 *oxygenate, n*—an oxygen-containing organic compound, which may be used as a fuel or fuel supplement, for example, various alcohols and ethers. **D4175**

3.1.19 *primary reference fuel blends above 100 octane, n*—the millilitres per U.S. gallon of tetraethyllead in *iso*octane that define octane numbers above 100 in accordance with an empirically determined relationship.

3.1.20 *primary reference fuel blends below 100 octane, n*—the volume % of *iso*octane in a blend with *n*-heptane that defines the octane number of the blend, *iso*octane being assigned as 100 and *n*-heptane as 0 octane number.

3.1.21 *quality control (QC) sample, n*—for use in quality assurance programs to determine and monitor the precision and stability of a measurement system, a stable and homogeneous material having physical or chemical properties, or both, similar to those of typical samples tested by the analytical measurement system. The material is properly stored to ensure sample integrity, and is available in sufficient quantity for repeated, long term testing. **D6299**

3.1.22 *repeatability conditions, n*—conditions where independent test results are obtained with the same method on identical test items in the same laboratory by the same operator using the same equipment within short intervals of time. **E456**

3.1.23 *reproducibility conditions, n*—conditions where test results are obtained with the same method on identical test items in different laboratories with different operators using different equipment. **E456**

3.1.24 *spread, n—in knock measurement*, the sensitivity of the analog detonation meter expressed in knockmeter divisions per octane number. (This feature is not a necessary adjustment in the digital detonation meter.)

3.1.25 *standard knock intensity, n—for knock testing*, that level of knock established when a primary reference fuel blend of specific octane number is used in the knock testing unit at maximum knock intensity fuel-air ratio, with the cylinder height (dial indicator or digital counter reading) set to the prescribed guide table value.

3.1.26 *toluene standardization fuels, n—for knock testing*, those volumetrically proportioned blends of two or more of the following: reference fuel grade toluene, *n*-heptane, and *iso*octane that have prescribed rating tolerances for $O.N._{ARV}$ determined by round-robin testing under reproducibility conditions.

3.2 *Definitions of Terms Specific to This Standard:*

3.2.1 *primary reference fuels, n—for knock testing, iso*octane, *n*-heptane, volumetrically proportioned mixtures of *iso*octane with *n*-heptane, or blends of tetraethyllead in *iso*octane that define the octane number scale.

3.2.2 *repeatability conditions NEG, n*—replicate testing conditions employed by the National Exchange Group in which a single operator tests two specimens taken from a single sample container with at least one other sample being tested between the two specimens.

3.3 *Abbreviations:*

3.3.1 *ARV* = accepted reference value
3.3.2 *CFR* = Cooperative Fuel Research
3.3.3 *C.R.* = compression ratio
3.3.4 *IAT* = intake air temperature
3.3.5 *K.I.* = knock intensity
3.3.6 *NEG* = National Exchange Group
3.3.7 *OA* = Octane Analyzer
3.3.8 *O.N.* = octane number
3.3.9 *PRF* = primary reference fuel
3.3.10 r_{NEG} = repeatability conditions NEG
3.3.11 *RTD* = resistance thermometer device (E344) platinum type
3.3.12 *TSF* = toluene standardization fuel

4. Summary of Test Method

4.1 The Research O.N. of a spark-ignition engine fuel is determined using a standard test engine and operating conditions to compare its knock characteristic with those of PRF blends of known O.N. Compression ratio and fuel-air ratio are adjusted to produce standard K.I. for the sample fuel, as measured by a specific electronic detonation measurement system. A standard K.I. guide table relates engine C.R. to O.N. level for this specific method. The fuel-air ratio for the sample fuel and each of the primary reference fuel blends is adjusted to maximize K.I. for each fuel.

4.1.1 The fuel-air ratio for maximum K.I. may be obtained (*1*) by making incremental step changes in mixture strength, observing the equilibrium K.I. value for each step, and then selecting the condition that maximizes the reading or (*2*) by picking the maximum K.I. as the mixture strength is changed from either rich-to-lean or lean-to-rich at a constant rate.

4.2 *Bracketing Procedures*—The engine is calibrated to operate at standard K.I. in accordance with the guidelines of the

AVA Documents
Document Sharing Hub

Full document details: ASTM D2699-24a

fuel-air ratio of the sample fuel is adjusted to maximize the K.I., and then the cylinder height is adjusted so that standard K.I. is achieved. Without changing cylinder height, two PRF blends are selected such that, at their fuel-air ratio for maximum K.I., one knocks harder (higher K.I.) and the other softer (lower K.I.) than the sample fuel. A second set of K.I. measurements for sample fuel and PRF blends is required, and the sample fuel octane number is calculated by interpolation in proportion to the differences in average K.I. readings. A final condition requires that the cylinder height used shall be within prescribed limits around the guide table value for the calculated O.N. Bracketing procedure ratings may be determined using either the equilibrium or dynamic fuel-air ratio approach.

4.3 *C.R. Procedure*—A calibration is performed to establish standard K.I. using the cylinder height specified by the guide table for the O.N. of the selected PRF. The fuel-air ratio of the sample fuel is adjusted to maximize the K.I. under equilibrium conditions; the cylinder height is adjusted so that standard K.I. is achieved. The calibration is reconfirmed and the sample fuel rating is repeated to establish the proper conditions a second time. The average cylinder height reading for the sample fuel, compensated for barometric pressure, is converted directly to O.N., using the guide table. A final condition for the rating requires that the sample fuel O.N. be within prescribed limits around that of the O.N. of the single PRF blend used to calibrate the engine to the guide table standard K.I. condition.

5. Significance and Use

5.1 Research O.N. correlates with commercial automotive spark-ignition engine antiknock performance under mild conditions of operation.

5.2 Research O.N. is used by engine manufacturers, petroleum refiners and marketers, and in commerce as a primary specification measurement related to the matching of fuels and engines.

5.2.1 Empirical correlations that permit calculation of automotive antiknock performance are based on the general equation:

$$\text{Road O.N.} = (k_1 \times \text{Research O.N.}) + (k_2 \times \text{Motor O.N.}) + k_3 \quad (1)$$

Values of k_1, k_2, and k_3 vary with vehicles and vehicle populations and are based on road-O.N. determinations.

5.2.2 Research O.N., in conjunction with Motor O.N., defines the antiknock index of automotive spark-ignition engine fuels, in accordance with Specification D4814. The antiknock index of a fuel approximates the Road octane ratings for many vehicles, is posted on retail dispensing pumps in the U.S., and is referred to in vehicle manuals.

$$\text{Antiknock index} = 0.5\ \text{Research O.N.} + 0.5\ \text{Motor O.N.} + 0 \quad (2)$$

This is more commonly presented as:

$$\text{Antiknock Index} = \frac{(R + M)}{2} \quad (3)$$

5.2.3 Research O.N. is also used either alone or in conjunction with other factors to define the Road O.N. capabilities of spark-ignition engine fuels for vehicles operating in areas of the world other than the United States.

5.3 Research O.N. is used for measuring the antiknock performance of spark-ignition engine fuels that contain oxygenates.

5.4 Research O.N. is important in relation to the specifications for spark-ignition engine fuels used in stationary and other nonautomotive engine applications.

6. Interferences

6.1 *Precaution*—Avoid exposure of sample fuels to sunlight or fluorescent lamp UV emissions to minimize induced chemical reactions that can affect octane number ratings.[7]

6.1.1 Exposure of these fuels to UV wavelengths shorter than 550 nm for a short period of time may significantly affect octane number ratings.

6.2 Certain gases and fumes that can be present in the area where the knock testing unit is located may have a measurable effect on the Research O.N. test result.

6.2.1 Halogenated refrigerant used in air conditioning and refrigeration equipment can promote knock. Halogenated solvents can have the same effect. If vapors from these materials enter the combustion chamber of the CFR engine, the Research O.N. obtained for sample fuels can be depreciated.

6.3 Electrical power subject to transient voltage or frequency surges or distortion can alter CFR engine operating conditions or knock measuring instrumentation performance and thus affect the Research O.N. obtained for sample fuels.

6.3.1 Electromagnetic emissions can cause interference with the analog knock meter and thus affect the Research O.N. obtained for sample fuels.

7. Apparatus

7.1 *Engine Equipment*[8]—This test method uses a single cylinder, CFR F-1 test engine for the determination of O.N. that consists of standard components as follows: crankcase, a cylinder/clamping sleeve assembly to provide continuously variable compression ratio adjustable with the engine operating, a thermal syphon recirculating jacket coolant system, a multiple fuel tank system with selector valving to deliver fuel through a single jet passage and carburetor venturi, an intake air system with controlled temperature and humidity equipment, electrical controls, and a suitable exhaust pipe. The engine flywheel is belt connected to a special electric power-absorption motor utilized to both start the engine and as a means to absorb power at constant speed when combustion is occurring (engine firing). See Fig. 1. The intensity of combustion knock is measured by electronic detonation sensing and metering instrumentation. See Fig. 1 and Table 1.

[7] Supporting data have been filed at ASTM International Headquarters and may be obtained by requesting Research Report RR:D02-1502. Contact ASTM Customer Service at service@astm.org.

[8] The sole source of supply of the new complete engine known to the committee at this time is CFR Engines Inc., N8 W22577 Johnson Drive, Pewaukee, WI 53186. If you are aware of alternative suppliers, please provide this information to ASTM International Headquarters. Your comments will receive careful consideration at a meeting of the responsible technical committee,[1] which you may attend.

AVA Documents
Document Sharing Hub

Full document details: ASTM D2699-24a

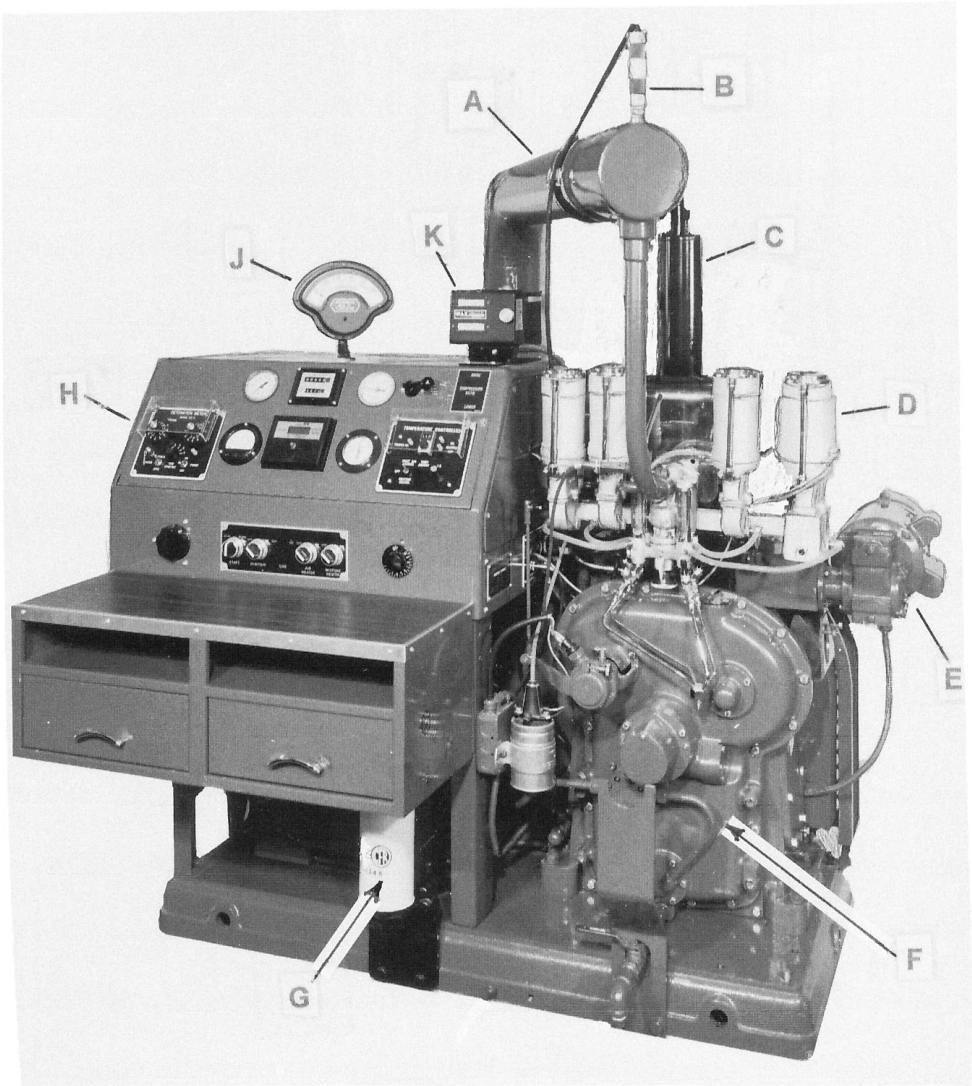

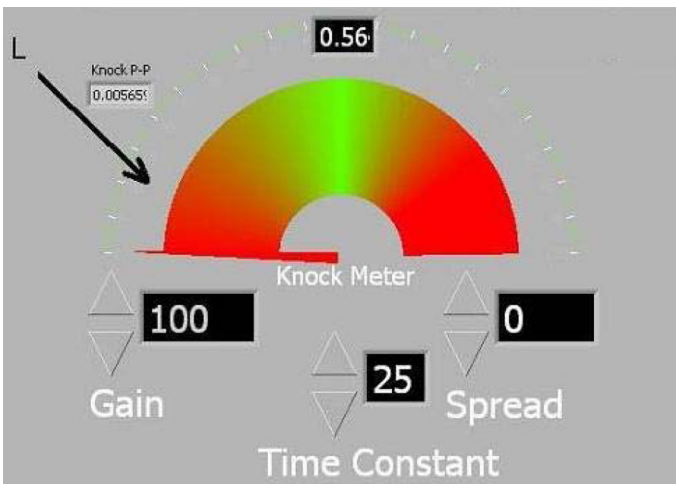

A—Air humidifier tube
B—Intake air heater
C—Coolant condenser
D—Four bowl carburetor
E—C.R. change motor
F—CFR-48 crankcase
G—Oil Filter
H—Ignition Detonation meter
J—Analog Knockmeter
K—C.R. digital counter
L—Digital Detonation Meter

FIG. 1 Research Method Test Engine Assembly

Documents
Document Sharing Hub

Full document details: ASTM D2699-24a

TABLE 1 General Rating Unit Characteristics and Information

Item	Description
Test Engine	CFR F-1 Research Method Octane Rating Unit with cast iron, box type crankcase with flywheel connected by V-belts to power absorption electrical motor for constant speed operation
Cylinder type	Cast iron with flat combustion surface and integral coolant jacket
Compression ratio	Adjustable 4:1 to 18:1 by cranked worm shaft and worm wheel drive assembly in cylinder clamping sleeve
Cylinder bore (diameter), in.	3.250 (standard)
Stroke, in.	4.50
Displacement, cu in.	37.33
Valve mechanism	Open rocker assembly with linkage for constant valve clearance as C.R. changes
Intake valve	Stellite faced, with 180° shroud
Exhaust valve	Stellite faced, plain type without shroud
Piston	Cast iron, flat top
Piston rings	
Top compression ring	1 chrome plated or ferrous, straight sided
Other compression rings	3 ferrous, straight sided
Oil control	1 cast iron, one piece, slotted (Type 85)
Camshaft overlap, °	5
Fuel system	
Carburetor	Single vertical jet and fuel flow control to permit adjustment of fuel-air ratio
Venturi throat diameter, in.	9/16 for all altitudes
Ignition	Electronically triggered condenser discharge through coil to spark plug
Ignition timing, °	Constant 13 btdc
Intake air humidity	Controlled within specified limited range

7.2 *Instrumentation—Auxiliary Equipment*—A number of components and devices have been developed to integrate the basic engine equipment into complete laboratory or on-line octane measurement systems. These include computer interface and software systems, as well as common hardware, tubing, fasteners, electrical and electronic items. Appendix X1 contains a listing of such items, many of which are potentially available from multiple sources. In some cases, selection of specific dimensions or specification criteria are important to achieve proper conditions for the knock testing unit, and these are included in Appendix X1 when applicable.

7.3 *Reference and Standardization Fuel Dispensing Equipment*—This test method requires repeated blending of reference fuels and TSF materials in volumetric proportions. In addition, blending of dilute tetraethyllead in *iso*octane may be performed on-site for making rating determinations above 100 O.N. Blending shall be performed accurately because rating error is proportional to blending error.

7.3.1 *Volumetric Blending of Reference Fuels*—Volumetric blending has historically been employed to prepare the required blends of reference fuels and TSF materials. For volumetric blending, a set of burets, or accurate volumetric apparatus, shall be used and the desired batch quantity shall be collected in an appropriate container and thoroughly mixed before being introduced to the engine fuel system.

7.3.1.1 For manual preparation of reference and standardization fuel blends, calibrated burets or volumetric apparatus having a capacity of 200 mL to 500 mL and a maximum volumetric tolerance of ±0.2 % shall be used. Calibration shall be verified in accordance with Practice E542.

7.3.1.2 Calibrated burets shall be outfitted with a dispensing valve and delivery tip to accurately control dispensed volume. The delivery tip shall be of such design that shut-off tip discharge does not exceed 0.5 mL.

7.3.1.3 The rate of delivery from the dispensing system shall not exceed 400 mL per 60 s.

7.3.1.4 The set of burets for the reference and standardization fuels shall be installed in such a manner and be supplied with fluids such that all components of each batch or blend are dispensed at the same temperature.

7.3.1.5 See Appendix X2 for volumetric reference fuel dispensing system information.

7.3.1.6 Automated volumetric blending apparatus may be used providing the system achieves a maximum volumetric blending tolerance limit of ±0.2 %.

7.3.2 *Volumetric Blending of Tetraethyllead*—A calibrated buret, pipette assembly, or other liquid dispensing apparatus having a capacity of not more than 4.0 mL and a critically controlled volumetric tolerance shall be used for dispensing dilute tetraethyllead into 400 mL batches of *iso*octane. Calibration of the dispensing apparatus shall be verified in accordance with Practice E542.

7.3.3 *Gravimetric Blending of Reference Fuels*—Use of blending systems that allow preparation of the volumetrically-defined blends by gravimetric (mass) measurements based on the density of the individual components is permitted,

AVA Documents
Document Sharing Hub

Full document details: ASTM D2699-24a

provided the system meets the requirement for maximum 0.2 % blending tolerance limits.

7.3.3.1 Calculate the mass equivalents of the volumetrically-defined blend components from the densities of the individual components at 15.56 °C (60 °F).

7.4 *Auxiliary Apparatus:*

7.4.1 *Special Maintenance Tools*—A number of specialty tools and measuring instruments should be utilized for easy, convenient, and effective maintenance of the engine and testing equipment. Lists and descriptions of these tools and instruments are available from the manufacturer of the engine equipment and those organizations offering engineering and service support for this test method.

7.4.2 *Ventilation Hoods*—Handling of reference and standardization fuels, dilute tetraethyllead, and test samples having various hydrocarbon compositions is best conducted in a well ventilated space or in a laboratory hood where air movement across the area is sufficient to prevent operator inhalation of vapors.

7.4.2.1 General purpose laboratory hoods are typically effective for handling hydrocarbon fuel blending.[9]

7.4.2.2 A blending hood meeting the requirements for dispensing toxic material shall be utilized in testing laboratories that choose to prepare leaded *iso*octane PRF blends on-site.

7.4.3 *Barometer*—A pressure measurement device capable of measuring the absolute value of air pressure in the room where the testing apparatus is located. With a resolution of at least 0.34 kPa (0.1 in. Hg) and a suggested range of 71 kPa to 105 kPa (21 in. Hg to 31 in. Hg).

8. Reagents and Reference Materials

8.1 *Cylinder Jacket Coolant*—Water shall be used in the cylinder jacket for laboratory locations where the resultant boiling temperature shall be 100 °C ± 1.5 °C (212 °F ± 3 °F). Water with commercial glycol-based antifreeze added in sufficient quantity to meet the boiling temperature requirement shall be used when laboratory altitude dictates. A commercial multifunctional water treatment material should be used in the coolant to minimize corrosion and mineral scale that can alter heat transfer and rating results. (**Warning—**Ethylene glycol based antifreeze is poisonous and may be harmful or fatal if inhaled or swallowed. See Annex A1.)

8.1.1 Water shall be understood to mean reagent water conforming to Type IV, of Specification D1193.

8.2 *Engine Crankcase Lubricating Oil*—An SAE 30 viscosity grade oil meeting the current API service classification for spark-ignition engines shall be used. It shall contain a detergent additive and have a kinematic viscosity of 9.3 mm^2 to 12.5 mm^2 per s (cSt) at 100 °C (212 °F) and a viscosity index of not less than 85. Oils containing viscosity index improvers shall not be used. Multigraded oils shall not be used. (**Warning—**Lubricating oil is combustible and its vapor is harmful. See Annex A1.)

TABLE 2 Specifications for Primary Reference Fuels

Property	*Iso*octane	*n*-heptane	80 PRF	Test Method
Purity, vol %, min	99.75	99.75		ASTM D2268
n-heptane, vol %	0.10 max		19.9 – 20.1	ASTM D2268
*Iso*octane, vol %		0.10 max	79.9 – 80.1	ASTM D2268
Lead, max	0.5 mg/L (0.002 g/U.S. gal)	0.5 mg/L (0.002 g/U.S. gal)	0.5 mg/L (0.002 g/U.S. gal)	IP 224/02

8.3 *PRF, iso*octane, 80-octane, and normal heptane classified as reference fuel grade and meeting the specifications that follow: (**Warning—**Primary reference fuel is flammable and its vapors are harmful. Vapors may cause flash fire. See Annex A1.)

8.3.1 *Iso*octane (2,2,4-trimethylpentane) shall meet the specifications in Table 2. (**Warning—***Iso*octane is flammable and its vapors are harmful. Vapors may cause flash fire. See Annex A1.)

8.3.2 *n-heptane* shall meet the specifications in Table 2. (**Warning—***n*-heptane is flammable and its vapors are harmful. Vapors may cause flash fire. See Annex A1.)

8.3.3 80 octane PRF blend, prepared using reference fuel grade *iso*octane and *n*-heptane shall meet the specifications in Table 2. (**Warning—**80 octane PRF is flammable and its vapors are harmful. Vapors may cause flash fire. See Annex A1.)

8.3.4 Refer to Annex A3 for octane numbers of various blends of 80 octane PRF and either *n*-heptane (Table A3.1) or *iso*octane (Table A3.2).

8.4 *Dilute Tetraethyllead* [10] (Commonly referred to as TEL Dilute Volume Basis) is a prepared solution of aviation mix tetraethyllead antiknock compound in a hydrocarbon diluent of 70 % (V/V) xylene, 30 % (V/V) *n*-heptane. (**Warning—**Dilute tetraethyllead is poisonous and flammable. It may be harmful or fatal if inhaled, swallowed, or absorbed through the skin. May cause flash fire. See Annex A1.)

8.4.1 The fluid shall contain 18.23 % ± 0.05 % (m/m) tetraethyllead and have a relative density 15.6/15.6 °C (60/60 °F) of 0.957 to 0.967. The typical composition of the fluid, excluding the tetraethyllead, is as follows:

Ingredient	Typical Concentration, % (m/m)
Ethylene dibromide (scavenger)	10.6
Diluent:	
xylene	52.5
n-heptane	17.8
Dye, antioxidant and inerts	0.87

[9] Refer to *Industrial Ventilation Manual*, published by the American Conference of Governmental Industrial Hygienists, Cincinnati, OH.

[10] Dilute tetraethyllead is available from Ethyl Corporation, 330 South Fourth Street, Richmond, VA 23219-4304; or from The Associated Octel Company, Ltd., 23 Berkeley Square, London, England W1X 6DT.

AVA Documents
Document Sharing Hub

Full document details: ASTM D2699-24a

8.4.2 Add dilute tetraethyllead, in millilitre quantities, to a 400 mL volume of *iso*octane to prepare PRF blends used for ratings over 100 O.N. The composition of the dilute fluid is such that when 2.0 mL are added to 400 mL of *iso*octane, the blend shall contain the equivalent of 2.0 mL of lead/U.S. gal (0.56 g of lead/L).

8.4.3 Refer to Annex A3 for octane numbers of blends of tetraethyllead and *iso*octane (see Table A3.3).

8.4.4 An alternative to blending with dilute tetraethyllead is to prepare leaded PRF from *iso*octane + 6.0 mL TEL per U.S. gallon and *iso*octane (see Table A3.4).

8.5 *Toluene, Reference Fuel Grade* shall meet the specifications in Table 3. Toluene purity is determined by subtracting the sum of the hydrocarbon impurities and water content from 100 %. (**Warning—**Toluene is flammable and its vapors are harmful. Vapors may cause flash fire. See Annex A1.)

NOTE 1—Experience has shown that Toluene exposed to atmospheric moisture (humidity) can absorb water. Options to help manage or control the Toluene moisture levels include installing an inline air filter/dryer on the drum vent, installing a nitrogen purge on the drum, and the use of dryer desiccant beads, etc.

8.5.1 Antioxidant shall be added by the supplier at a treat rate suitable for good long term stability as empirically determined with the assistance of the antioxidant supplier.

8.6 Check Fuels are in-house typical spark-ignition engine fuels having selected octane numbers, low volatility, and good long term stability. (**Warning—**Check Fuel is flammable and its vapors are harmful. Vapors may cause flash fire. See Annex A1.)

9. Sampling

9.1 Collect samples in accordance with Practices D4057, D4177, or D5842.

9.2 *Sample Temperature*—Samples shall be cooled to a temperature of 2 °C to 10 °C (35 °F to 50 °F), in the container in which they are received, before the container is opened.

9.3 *Protection from Light*—Collect and store sample fuels in an opaque container, such as a dark brown glass bottle, metal can, or a minimally reactive plastic container to minimize exposure to UV emissions from sources such as sunlight or fluorescent lamps.

10. Basic Engine and Instrument Settings and Standard Operating Conditions

10.1 *Installation of Engine Equipment and Instrumentation*—Installation of the engine and instrumentation requires placement of the engine on a suitable foundation and hook-up of all utilities. Engineering and technical support for this function is required, and the user shall be responsible to comply with all local and national codes and installation requirements.

10.1.1 Proper operation of the CFR engine requires assembly of a number of engine components and adjustment of a series of engine variables to prescribed specifications. Some of these settings are established by component specifications, others are established at the time of engine assembly or after overhaul, and still others are engine running conditions that must be observed or determined by the operator during the testing process.

10.2 *Conditions Based on Component Specifications:*

10.2.1 *Engine Speed*—600 r/min ± 6 r/min when the engine is firing, with a maximum variation of 6 r/min occurring during a rating. Engine speed, while firing, shall not be more than 3 r/min greater than when it is motoring without combustion.

10.2.2 *Indexing Flywheel to Top-Dead-Center (tdc)*—With the piston at the highest point of travel in the cylinder, set the flywheel pointer mark in alignment with the 0° mark on the flywheel in accordance with the instructions of the manufacturer.

10.2.3 *Valve Timing*—The engine uses a four-stroke cycle with two crankshaft revolutions for each complete combustion cycle. The two critical valve events are those that occur near tdc; intake valve opening and exhaust valve closing. See Annex A2 for camshaft timing and valve lift measurement procedures.

10.2.3.1 Intake valve opening shall occur 10.0° ± 2.5° after-top-dead-center (atdc) with closing at 34° after-bottom-dead-center (abdc) on one revolution of the crankshaft and flywheel.

10.2.3.2 Exhaust valve opening shall occur 40° before-bottom-dead-center (bbdc) on the second revolution of the crankshaft and flywheel, with closing at 15.0° ± 2.5° atdc on the next revolution of the crankshaft and flywheel.

10.2.4 *Valve Lift*—Intake and exhaust cam lobe contours, while different in shape, shall have a contour rise of 0.246 in. to 0.250 in. (6.248 mm to 6.350 mm) from the base circle to the top of the lobe. The resulting valve lift shall be 0.238 in. ± 0.002 in. (6.045 mm ± 0.05 mm). See Annex A2 for camshaft timing and valve lift measurement procedure.

10.2.5 *Intake Valve Shroud*—The intake valve has a 180° shroud or protrusion just inside the valve face to direct the incoming fuel-air charge and increase the turbulence within the combustion chamber. This valve stem is drilled for a pin, which is restrained in a valve guide slot, to prevent the valve from rotating and thus maintain the direction of swirl. The valve shall be assembled in the cylinder, with the pin aligned in the valve guide, so that the shroud is toward the spark plug side of the combustion chamber and the swirl is directed in a counterclockwise direction if it could be observed from the top of the cylinder.

TABLE 3 Specifications for Toluene

Property	Toluene	Test Method
Purity, vol %, minimum	99.5	ASTM D7504
Water, ppm, max	200	ASTM D6304 or E1064
Hydroperoxide number, mg/kg as O, max	5	ASTM D3703

AVA Documents
Document Sharing Hub

Full document details: ASTM D2699-24a

10.2.6 *Carburetor Venturi*—A 9/16 in. (14.3 mm) venturi throat size shall be used regardless of ambient barometric pressure.

10.3 *Assembly Settings and Operating Conditions:*

10.3.1 *Direction of Engine Rotation*—Clockwise rotation of the crankshaft when observed from the front of the engine.

10.3.2 *Valve Clearances:*

10.3.2.1 *Engine Running and Hot*—The clearance for both intake and exhaust valves shall be set to 0.008 in. ± 0.001 in. (0.20 mm ± 0.025 mm), measured under standard operating conditions with the engine running at equilibrium conditions on a 90 O.N. PRF blend.

10.3.3 *Oil Pressure*—172 kPa to 207 kPa (25 psi to 30 psi). See Annex A2 for the procedure to adjust crankcase lubricating oil pressure.

10.3.4 *Oil Temperature*—57 °C ± 8 °C (135 °F ± 15 °F).

10.3.5 *Cylinder Jacket Coolant Temperature*—100 °C ± 1.5 °C (212 °F ± 3 °F) constant within ±0.5 °C (±1 °F) when CR or KI results used for octane determination on each fuel are recorded.

10.3.6 *Intake Air Temperature*—52 °C ± 1 °C (125 °F ± 2 °F) is specified for operation at standard barometric pressure of 101.0 kPa (29.92 in. Hg). IATs for other prevailing barometric pressure conditions are listed in Annex A4 (see Tables A4.4 and A4.5). If IAT tuning is used to qualify the engine as fit-for-use, the temperature selected shall be within ±22 °C (±40 °F) of the temperature listed in Annex A4 (Tables A4.4 and A4.5) for the prevailing barometric pressure and this temperature shall then be maintained within ±1 °C (±2 °F) when CR or KI results used for octane determination on each fuel are recorded.

10.3.6.1 The IAT required to qualify the engine in each TSF blend O.N. range shall also be used for rating all sample fuels in that O.N. range during an operating period.

10.3.6.2 Temperature measurement systems used to establish the Intake Air Temperature in this test method shall exhibit the same temperature indicating characteristics and accuracy as the relevant ASTM Type 83C (83F) or 135C (135F) thermometer installed at the orifice provided using the manufacturer's prescribed fitting.

10.3.6.3 To ensure the correct temperature is indicated, the temperature measurement system shall be installed in accordance with the instructions provided for this specific application.

10.3.7 *Intake Air Humidity*—0.00356 kg to 0.00712 kg water per kg (25 to 50 grains of water per lb) of dry air.

NOTE 2—The humidity specification is based upon the original ice tower. If air conditioning equipment is used it may not supply air within the specification if the ambient relative humidity is excessively high or too low. The equipment manufacturers should be consulted to verify the effective working range.

10.3.8 *Cylinder Jacket Coolant Level:*

10.3.8.1 *Engine Running and Hot*—Treated water/coolant shall be added to the cooling condenser-cylinder jacket so that the level in the condenser sight glass shall be within ±1 cm (±0.4 in.) of the LEVEL HOT mark on the coolant condenser.

NOTE 3—When stopped and cold, a coolant level that is just observable in the bottom of the condenser sight glass will typically provide the controlling engine running and hot operating level.

10.3.9 *Engine Crankcase Lubricating Oil Level:*

10.3.9.1 *Engine Running and Hot*—Oil shall be added to the crankcase so that the level is approximately mid-position in the crankcase oil sight glass.

NOTE 4—When stopped and cold, oil added to the crankcase so that the level is near the top of the sight glass will typically provide the engine running and hot operating level.

10.3.10 *Crankcase Internal Pressure*—As measured by a gage, pressure sensor, or manometer connected to an opening to the inside of the crankcase through a snubber orifice to minimize pulsations, the pressure shall be less than zero (a vacuum) and is typically from 25 mm to 150 mm (1 in. to 6 in.) of water less than atmospheric pressure. Vacuum shall not exceed 255 mm (10 in.) of water.

10.3.11 *Exhaust Back Pressure*—As measured by a gage or manometer connected to an opening in the exhaust surge tank or main exhaust stack through a snubber orifice to minimize pulsations, the static pressure should be as low as possible, but shall not create a vacuum nor exceed 255 mm (10 in.) of water differential in excess of atmospheric pressure.

10.3.12 *Exhaust and Crankcase Breather System Resonance*—The exhaust and crankcase breather piping systems shall have internal volumes and be of such length that gas resonance does not result. See Appendix X3 for a suitable procedure to determine if resonance exists.

10.3.13 *Belt Tension*—The belts connecting the flywheel to the absorption motor shall be tightened, after an initial break-in, so that with the engine stopped, a 2.25 kg (5 lb) weight suspended from one belt halfway between the flywheel and motor pulley shall depress the belt approximately 12.5 mm (0.5 in.).

10.3.14 *Basic Rocker Arm Carrier Adjustment:*

10.3.14.1 *Basic Rocker Arm Carrier Support Setting*—For exposed valve train applications, each rocker arm carrier support shall be threaded into the cylinder so that the distance between the machined surface of the cylinder and the underside of the fork is 31 mm (1 7/32 in.). For enclosed valve train applications, each rocker arm carrier support shall be threaded into the cylinder so that the distance between the top machined surface of the valve tray and the underside of the fork is 19 mm (3/4 in.).

10.3.14.2 *Basic Rocker Arm Carrier Setting*—With the cylinder positioned so that the distance between the underside of the cylinder and the top of the clamping sleeve is approximately 16 mm (5/8 in.), the rocker arm carrier shall be set horizontal before tightening the bolts that fasten the long carrier support to the clamping sleeve.

10.3.14.3 *Basic Rocker Arm Setting*—With the engine on tdc on the compression stroke, and the rocker arm carrier set at the basic setting, set the valve adjusting screw to approximately the mid-position in each rocker arm. Then adjust the length of the push rods so that the rocker arms shall be in the horizontal position.

10.3.15 *Basic Spark Setting*—13° btdc regardless of cylinder height.

10.3.15.1 The digital timing indicator currently supplied with CFR engine units, or the graduated spark equipment

AVA Documents
Document Sharing Hub

Full document details: ASTM D2699-24a

FIG. 2 Actual Compression Pressure for Setting Cylinder Height

formerly supplied, shall be in proper working order and calibrated so that the time of ignition is correctly displayed with reference to the engine crankshaft.

10.3.15.2 *Basic Ignition Timer Control Arm Setting*—If the CFR engine is equipped with an ignition control arm assembly, the knurled clamping screw on the control arm shall be loose so that the linkage is ineffective.

10.3.15.3 *Ignition Timer Basic Transducer to Rotor Vane Gap Setting*—0.08 mm to 0.13 mm (0.003 in. to 0.005 in.).

10.3.16 *Spark Plug*—Champion D16, or equivalent.

10.3.16.1 *Gap*—0.51 mm ± 0.13 mm (0.020 in. ± 0.005 in.).

10.3.17 *Basic Cylinder Height Setting*—Thoroughly warm up the engine under essentially standard operating conditions. Shut the unit down and check that the ignition is turned off and fuel cannot enter the combustion chamber. Install a calibrated compression pressure gage assembly on the engine, motor the engine, and adjust the cylinder height so that the unit produces the basic compression pressure for the prevailing barometric pressure as prescribed by the relationship of Fig. 2.

10.3.17.1 Index the cylinder height measurement device(s) to the appropriate value, uncompensated for barometric pressure, as follows:

Digital Counter Reading of 930
Dial Indicator Reading of 0.352 in.

10.3.17.2 Refer to Annex A2 for a detailed cylinder height indexing procedure.

10.3.18 *Fuel-Air Ratio*—The fuel-air ratio (mixture proportion) for each sample fuel and PRF involved in the determination of an O.N. result shall be that which maximizes the K.I.

10.3.18.1 Fuel-air ratio is a function of the effective fuel level in the vertical jet of the standard carburetor assembly and is typically indicated as the fuel level in the appropriate carburetor sight glass.

10.3.18.2 The fuel level that produces maximum K.I. shall be from 0.7 in. to 1.7 in., referenced to the centerline of the venturi. If necessary, change the carburetor horizontal jet size (or equivalent restrictive orifice device) to satisfy the fuel level requirement.

10.3.18.3 The bracketing–dynamic equilibrium procedure requires a falling level reservoir assembly to vary fuel-air ratio at a constant rate from a rich to lean mixture. The cross sectional area of the reservoir determines the rate at which the fuel level falls. Within the range that establishes a fuel level for maximum K.I. in the carburetor vertical jet between 0.7 in. and 1.7 in. referenced to the centerline of the carburetor venturi, the cross sectional area of the reservoir shall be constant and not less than 3830 mm^2 (5.9 $in.^2$).

10.3.19 *Carburetor Cooling*—Circulate coolant through the coolant passages of the carburetor whenever there is evidence of premature vaporization in the fuel delivery passages. Release of hydrocarbon vapors from the sample fuel can result in uneven engine operation or erratic K.I. reading and is usually

AVA Documents
Document Sharing Hub

Full document details: ASTM D2699-24a

indicated by bubble formation or abnormal fluctuation of the fuel level in the sight glass.

10.3.19.1 *Coolant*—Water or a water/antifreeze mixture.

10.3.19.2 *Coolant Temperature*—The liquid coolant delivered to the carburetor coolant exchangers shall be cold enough to prevent excessive vaporization but not colder than 0.6 °C (33 °F) or warmer than 10 °C (50 °F).[11]

10.3.20 *Analog Instrumentation:*

10.3.20.1 *Analog Knockmeter Reading Limits*—The operational range for K.I. readings on the knockmeter shall be from 20 to 80. Knock intensity is a nonlinear characteristic below 20 and the analog knockmeter has the potential to be nonlinear above 80.

10.3.20.2 *Analog Detonation Meter Spread and Time Constant Settings*—Optimize these variables to maximize spread commensurate with reasonable K.I. signal stability. Refer to Procedure sections and Annex A2 for further detail.

10.3.20.3 *Analog Knockmeter Needle Mechanical Zero Adjustment*—With the detonation meter power switch in the OFF position, and the meter switch in the ZERO position, set the knockmeter needle to ZERO using the adjusting screw provided on the knockmeter face.

10.3.20.4 *Analog Detonation Meter Zero Adjustment*—With the detonation meter power switch in the ON position, the meter setting in the ZERO position, the time constant setting on 3, and the meter reading and spread controls in their nominal operating positions, set the needle of the knockmeter to read ZERO using the detonation meter zero adjusting screw on the 501T and 501C meters (which is to the left of the meter switch on these detonation meters and covered by a knurled cap) or by depressing the zero button on the SSD7000.

10.3.21 *Digital Instrumentation:*

10.3.21.1 *Digital Knock Meter Reading Limits*—The operational range for K.I. readings on the digital knockmeter shall be from 0 to 999 K.I. and is linear throughout this range.

10.3.21.2 *Digital Detonation Meter Spread and Time Constant Settings*—Experience has shown that these variables can be left constant, and default values can be used. The default value for Spread on the Digital Detonation Meter can be left at 0, and the default value for the Time Constant on the Digital Detonation Meter can be left at 25.

NOTE 5—The Digital Knockmeter does not have a zero adjustment as it is a software-based device.

11. Test Variable Characteristics

11.1 *Cylinder Height Relationship to O.N.*—Cylinder height, a measure of C.R., has a significant effect on fuels and their knocking characteristic. Every fuel has a critical compression ratio at which knock begins to occur. As C.R. is increased above this critical threshold, the degree of knock, or severity of knock, increases. The Research method of test compares sample fuels to PRF blends at a selected knock level termed standard K.I. guide tables of cylinder height versus O.N. have been empirically determined using PRF blends.[12] They are based on the concept that the K.I. at all O.N. values is constant as detected by the knock measuring instrumentation. Fig. 3 illustrates the slightly nonlinear relationship between Research O.N. and cylinder height expressed as digital counter reading. Specific guide tables in terms of both digital counter reading and dial indicator reading are in Annex A4 (Tables A4.1-A4.3).

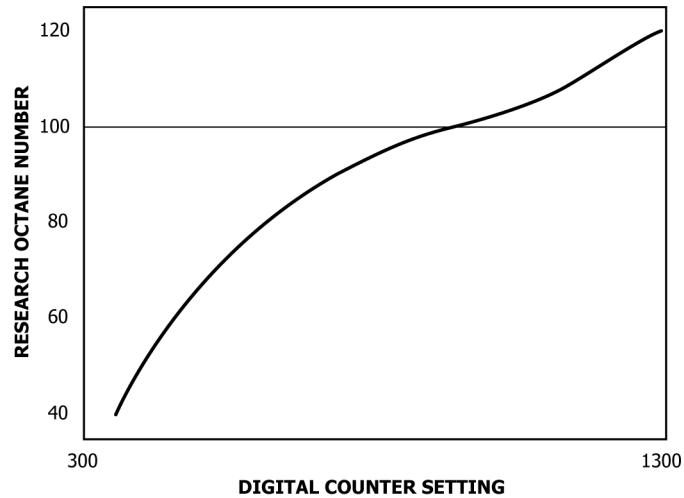

FIG. 3 Research O.N. Versus Digital Counter Reading Characteristic

11.2 *Barometric Pressure Compensation of Cylinder Height*—O.N. values determined by this test method are referenced to standard barometric pressure of 760 mm (29.92 in.) of Hg. Changes in barometric pressure affect the level of knock because the density of the air consumed by the engine is altered. To compensate for a prevailing barometric pressure that is different from standard, the cylinder height is offset so that the K.I. will match that of an engine at standard barometric pressure. For lower than standard barometric pressure conditions, the cylinder height is changed to increase the engine C.R. and thus the knocking level. For higher than standard barometric pressure conditions, the cylinder height is changed to lower C.R. The changes in either digital counter reading or dial indicator reading to compensate for barometric pressure are listed in Annex A4 (see Tables A4.4 and A4.5).

11.2.1 *Digital Counter Applications*—The digital counter has two indicating counters. The top counter is directly connected to the worm shaft, which rotates the worm wheel that raises or lowers the cylinder in the clamping sleeve. It is the uncompensated digital counter reading. The lower counter can be disengaged from the upper counter for the purpose of off-setting its reading and thus establish the differential or compensation for prevailing barometric pressure. With the differential set, the two counters can be engaged to move together with the lower counter indicating the measure of cylinder height compensated to standard barometric pressure.

[11] Supporting data have been filed at ASTM International Headquarters and may be obtained by requesting Research Report RR:D02-1006. Contact ASTM Customer Service at service@astm.org.

[12] Detonation meter guide tables were generated by setting the cylinder height to the value for the former bouncing pin instrumentation value at 85 O.N. and then using that knock intensity as the reference for determining the cylinder height required for primary reference fuel blends over the [illegible]

AVA Documents
Document Sharing Hub

Full document details: ASTM D2699-24a

11.2.1.1 Digital counter readings decrease as cylinder height is raised and increase as cylinder height is lowered.

11.2.1.2 To index the digital counter unit, position the selector knob to any setting other than 1, change the cylinder height in the proper direction to compensate for the prevailing barometric pressure as given in Annex A4 (see Tables A4.4 and A4.5) so that the lower indicating counter is offset from the upper indicating counter by the amount of the compensation.

11.2.1.3 For barometric pressures lower than 760 mm (29.92 in.) of Hg, the lower indicating counter shall be less than the upper counter. For barometric pressures higher than 760 mm (29.92 in.) of Hg, the lower indicating counter shall be higher than the upper counter.

11.2.1.4 After adjusting to the correct counter readings, reposition the selector knob to 1 so that both indicating counters change when cylinder height changes are made. Check that the proper differential prevails as changes in cylinder height are made.

11.2.1.5 The lower indicating counter represents the measure of cylinder height at standard barometric pressure and is utilized for all comparisons with the values in the guide tables.

11.2.2 *Dial Indicator Applications*—The dial indicator is installed in a bracket on the side of the cylinder clamping sleeve so that the movable spindle contacts an anvil screw, positioned in a bracket mounted on the cylinder. As the cylinder is raised or lowered, the dial indicator reading measures the cylinder height in thousandths of an inch of travel. When indexed, the dial indicator reading is a measure of cylinder height for engines operating at standard barometric pressure. If the prevailing barometric pressure is other than 760 mm (29.92 in.) of Hg, correct the actual dial indicator reading so that it is compensated to standard barometric pressure. Compensated dial indicator readings apply whenever the reading is pertinent during the rating of sample fuels or when calibrating the engine using PRF blends.

11.2.2.1 Dial indicator readings decrease as cylinder height is lowered and increase as cylinder height is raised.

11.3 *Engine Calibration at the Guide Table Cylinder Height*—Calibrate the engine to produce standard K.I. at an O.N. level where sample fuels are expected to rate.

11.3.1 Prepare a PRF blend of the selected O.N. and introduce it to the engine.

11.3.2 Set the cylinder height to the appropriate guide table value (compensated for barometric pressure) for the O.N. of the PRF blend.

11.3.3 Determine the fuel level for maximum K.I.

11.3.4 Adjust the meter reading dial of the detonation meter so that the knockmeter reading is 50 ± 2 divisions.

11.4 *Fuel-Air Ratio Characteristic*—With the engine operating at a cylinder height that causes knock, variation of the fuel-air mixture has a characteristic effect, typical for all fuels. The peaking or maximizing knock characteristic is illustrated in Fig. 4. This test method specifies that each sample fuel and PRF shall be operated at the mixture condition that produces the maximum K.I. The CFR engine carburetor, utilizing a single vertical jet, provides a simple means to monitor a measure of fuel-air ratio using a sight glass that indicates the fuel level in the vertical jet. See Fig. 5, which illustrates the relationships of the components. Low fuel levels relate to lean mixtures and higher levels to rich mixtures. Fuel level changes are made to determine the level that produces the maximum knocking condition. To maintain good fuel vaporization, a restrictive orifice or horizontal jet is utilized so that the maximum knock condition occurs for fuel levels between 0.7 in. and 1.7 in. referenced to the centerline of the carburetor venturi. The mechanics for varying the fuel mixture can be accomplished using various approaches.

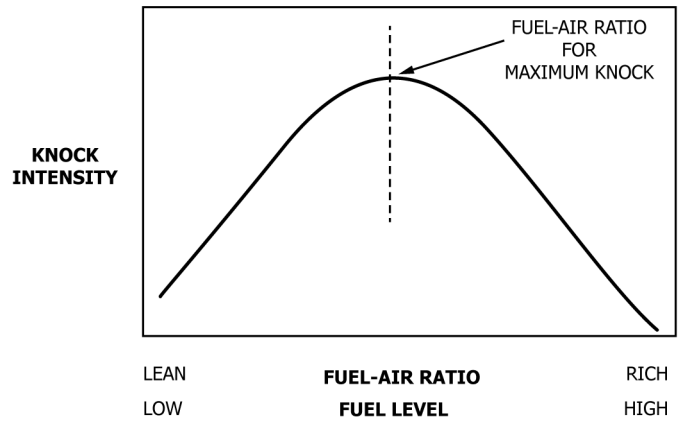

FIG. 4 Typical Effect of Fuel-Air Ratio on Knock Intensity

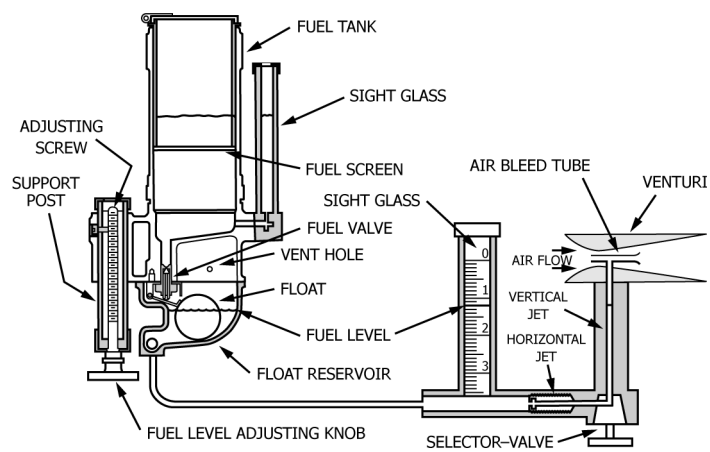

- Air flow through venturi is constant
- Raising fuel level richens F/A mixture
- Fuel level for maximum K.I. depends on horizontal jet size and fuel level
- Fuel level for maximum K.I. must be between 0.7 and 1.7
- Larger hole size in horizontal jet will lower maximum K.I. fuel level.

FIG. 5 CFR Engine Carburetor Schematic

11.4.1 *Fixed Horizontal Jet–Variable Fuel Level System*—Fuel level adjustments are made by raising or lowering the float reservoir in incremental steps. Selection of a horizontal jet having the appropriate hole size establishes the fuel level at which a typical sample fuel achieves maximum knock.

11.4.2 *Fixed Fuel Level–Variable Orifice System*—A fuel reservoir, in which the fuel can be maintained at a prescribed constant level, supplies an adjustable orifice (special long-tapered needle valve) used in place of the horizontal jet. Fuel mixture is changed by adjustment of the needle valve. Typically, the constant fuel level selected is near the mid-level,

AVA Documents
Document Sharing Hub

Full document details: ASTM D2699-24a

which satisfies the fuel level specification and also provides good fuel vaporization.

11.4.3 *Dynamic or Falling Level System*—A fuel reservoir, filled to a higher level than that required for maximum K.I., delivers fuel through either a fixed bore or adjustable horizontal jet. With the engine firing, the fuel level falls as fuel is consumed. Fuel level changes automatically, at a specifically selected constant rate, established by the cross-sectional area of the fuel reservoir and associated sight glass assembly. Maximum K.I. is recorded as the fuel level passes through the critical level.

11.4.4 *OA–Fixed Horizontal Jet-Variable Fuel Volume*—Fuel-air ratio adjustments are made by changing the amount of fuel delivered to the vertical jet. This is accomplished by varying the fuel delivery at a rate which ensures the K.I. reaches equilibrium with each change. Maximum K.I. is recorded as the fuel-air ratio passes through the critical region, either from a lean to rich, or a rich to lean condition.

12. Engine Standardization

12.1 *Unit Preparation*—Operate the properly commissioned knock test unit at temperature equilibrium and in compliance with the basic engine and instrument settings and standard operating conditions prescribed for this test method.

12.1.1 Operate the engine on fuel for approximately 1 h to ensure that all critical variables are stable. During the final 10 min of this warm-up period, operate the engine at a typical K.I. level.

12.2 *Fit-for-Use Qualification for Each Operating Period:*

12.2.1 Every sample fuel O.N. determination shall be performed using an engine that has been qualified as fit-for-use by rating the appropriate TSF blend.

12.2.2 Qualify the engine using the appropriate TSF blends in accordance with the following conditions:

12.2.2.1 At least once during each 12 h period of rating.

12.2.2.2 After an engine has been shut down for more than 2 h.

12.2.2.3 After a unit has been operated at non-knocking conditions for more than 2 h.

12.2.2.4 After a barometric pressure change of more than 0.68 kPa (0.2 in. Hg) from that reading made at the time of the previous TSF blend rating for the specific O.N. range.

12.2.2.5 All TSF blends shall be unchilled and rated without carburetor cooling.

NOTE 6—Carburetor cooling refers to those parts of the engine that are cooled with a circulating fluid including the vertical jet cooling passage, carburetor bowl, and float chamber.

12.2.3 When either bracketing procedure is utilized to determine the TSF blend rating, establish standard K.I. using a PRF blend whose whole O.N. is closest to that of the $O.N._{ARV}$ of the selected TSF blend.

12.2.4 When a bracketing procedure is utilized to determine the TSF blend rating, set the cylinder height, compensated for the prevailing barometric pressure, to the guide table value for the $O.N._{ARV}$ of the selected TSF blend.

12.2.5 When the compression ratio procedure is utilized to determine the TSF blend rating, first establish standard K.I. using the PRF blend whose whole O.N. is closest to that of the $O.N._{ARV}$ of the selected TSF blend.

12.3 *Fit-for-Use Procedure—80.2 to 100.0 O.N. Range:*

12.3.1 Select the appropriate TSF blend(s) from Table 4 that are applicable for the O.N. values of the sample fuel ratings tested or to be tested during the operating period.

12.3.2 Rate the TSF blend using the standard IAT based on the prevailing barometric pressure.

12.3.2.1 It is permissible to start fit-for-use testing for a new operating period using approximately the same IAT tuning adjustment applied for the previous operating period, recognizing that the barometric pressure for the two periods may be slightly different, if both conditions shown are met:

(1) The engine standardization during the last operating period required IAT tuning for the last fit-for-use test.

(2) Maintenance has not taken place in the period between fit-for-use tests.

12.3.3 If the untuned TSF blend rating is within the untuned rating tolerances of Table 4 for that TSF blend, the engine is fit for use to rate sample fuels within the applicable O.N. range. IAT tuning is not required.

12.3.4 If the untuned TSF blend rating is more than 0.1 O.N. from the $O.N._{ARV}$ in Table 4, it is permissible to adjust the IAT slightly to obtain the $O.N._{ARV}$ for that specific TSF blend.

12.3.5 If the untuned TSF blend rating is outside the untuned rating tolerance of Table 4, adjust the IAT within prescribed limits to obtain the $O.N._{ARV}$ for that specific TSF blend.

12.3.5.1 The tuned IAT shall be no further than ±22 °C (±40 °F) from the standard IAT specified for the prevailing barometric pressure.

NOTE 7—When using the analog detonation meter, a TSF blend rating change from 0.1 to 0.2 O.N. requires an IAT adjustment of approximately 5.5 °C (10 °F). Increasing the temperature decreases the O.N. The O.N. change per IAT degree varies slightly with O.N. level and is typically larger at higher O.N. values.

NOTE 8—When using the digital detonation meter, a TSF blend rating change from 0.3 to 0.4 O.N. requires an IAT adjustment of approximately 4.5 °C (8 °F). Increasing the temperature decreases the O.N. The O.N. change per IAT degree varies slightly with O.N. level and is typically larger at higher O.N. values.

TABLE 4 TSF Blend Octane Number Accepted Reference Values, Untuned Rating Tolerances and Sample Fuel Octane Number Range of Use[A]

TSF Blend R.O.N. ARV	Untuned Rating Tolerance	TSF Blend Composition, vol %			Use for Sample Fuel R.O.N. Range
		Toluene	*Iso*octane	Heptane	
85.2[B]	±0.3	66	0	34	80.2–87.4
89.3[C]	±0.3	70	0	30	87.1–91.5
93.4[C,D]	±0.3	74	0	26	91.2–95.3
96.9[C,D]	±0.3	74	5	21	95.0–98.5
99.8[D]	±0.3	74	10	16	98.2–100.0

[A] Request RR:D02-1208 and RR:D02-1354 for R.O.N. accepted reference value (ARV) data.
[B] R.O.N. accepted reference values determined by National Exchange Group and Institute of Petroleum in 1988/1989.
[C] R.O.N. accepted reference values determined by National Exchange Group in 1986.
[D] R.O.N. accepted reference values determined by TCD93 worldwide program in 1993.

AVA Documents
Document Sharing Hub

Full document details: ASTM D2699-24a

12.3.5.2 If the temperature tuned TSF blend rating is within ± 0.1 O.N. of the O.N.$_{ARV}$ in Table 4, the engine is fit for use to rate sample fuels within the applicable O.N. range.

12.3.5.3 If the temperature tuned TSF blend rating is more than ± 0.1 O.N. from the O.N.$_{ARV}$ in Table 4, the engine shall not be used for rating sample fuels having O.N. values within the applicable range until the cause is determined and corrected.

12.4 *Fit-for-Use Procedure—Below 80.2 and Above 100.0 O.N.:*

12.4.1 Select the appropriate TSF blend(s) from Table 5 that are applicable for the O.N. values of the sample fuel ratings tested, or to be tested, during the operating period.

12.4.2 The rating tolerances of Table 5 are determined by multiplying the standard deviation of the data that established the O.N.$_{ARV}$ of the TSF blend and a statistical tolerance limit factor *K* for normal distributions. Using the standard deviation values for the TSF blend data sets of 100 or more values and K = 1.5, it is estimated that in the long run, in 19 cases out of 20, at least 87 % of the test engines would rate the TSF blend within the rating tolerances listed in Table 5.

12.4.3 Rate the TSF blend using the IAT specified for the prevailing barometric pressure. Temperature tuning is not permitted for these O.N. levels.

12.4.4 If the TSF blend rating is within the rating tolerance, the engine is fit for use to rate sample fuels having O.N. values within the applicable range for that TSF blend.

12.4.5 If the TSF blend rating is outside the rating tolerance, conduct a comprehensive examination to determine the cause and required corrections. It is expected that some engines will rate outside the rating tolerance, at one or more of the O.N. levels, under standard operating conditions. Control records or charts of these TSF blend ratings can be helpful to demonstrate the ongoing performance characteristic of the unit.

13. Checking Engine Performance

13.1 *Check Fuels:*

13.1.1 While engine standardization is dependent solely on TSF blend determinations, rating Check Fuels can be done to determine the accuracy (lack of bias) of the engine.

13.1.1.1 Test Check Fuel(s).

13.1.1.2 Compare the octane rating obtained for the Check Fuel to the Check Fuel O.N.$_{ARV}$.

TABLE 5 TSF Blend O.N.$_{ARV}$, Rating Tolerances and Sample Fuel Octane Number Range of Use[A,B]

TSF Blend R.O.N. ARV	Rating Tolerance	TSF Blend Composition, vol %			Use for Sample Fuel R.O.N. Range
		Toluene	*Iso*octane	Heptane	
65.1	±0.6	50	0	50	Below 70.3
75.6	±0.5	58	0	42	70.1–80.5
...	...	...	...	...	...
103.3	±0.9	74	15	11	100.0–105.7
107.6	±1.4	74	20	6	105.2–110.6
113.0	±1.7	74	26	0	Above 110.3

[A] Request RR:D02-1208 for R.O.N. accepted reference value data.
[B] R.O.N. accepted reference value data for all blends determined by National Exchange Group and Institute of Petroleum in 1988/1989.

13.1.1.3 Specifics for control chart set up and interpretation of the delta between the rating and the ARV value can be found in Practice D6299.

13.1.1.4 If an out-of-statistical control situation is detected, examine the engine system operation for assignable cause(s).

13.2 *Quality Control (QC Testing)*—Users should conduct a regular statistical quality control program to monitor the engine is in statistical control over time.

13.2.1 This test method suggests validating the engine system by the rating of a QC sample.

13.2.2 The QC sample is a typical spark ignition engine fuel having a research octane number within the normal operating range of the engine.

13.2.2.1 Users are encouraged to assess the normal operating range and determine if multiple QC samples are required based upon the RON range of the samples typically rated.

13.2.3 Use appropriate control charts or other statistically equivalent techniques to assess the RON value. Control charts often used for this application are Individuals and Moving Range (I/MR).

13.2.4 Specifics for control chart set up and interpretation can be found in Practice D6299.

13.2.5 If an out-of-statistical control situation is detected, examine the engine system operation for assignable cause(s).

PROCEDURE A

14. Bracketing—Equilibrium Fuel Level

14.1 Check that all engine operating conditions are in compliance and equilibrated with the engine running on a typical fuel at approximately standard K.I.

14.2 Perform engine fit-for-use testing utilizing a TSF blend applicable for the O.N. range in which sample fuels are expected to rate. If TSF blend temperature tuning is to be used, determine the proper IAT required. Perform this rating in the same manner described below for a sample fuel, except that the TSF blend shall be rated without carburetor cooling, and the cylinder height shall be set, compensated for the prevailing barometric pressure, to the guide table value for the O.N.$_{ARV}$ of the selected TSF blend.

14.3 Establish standard K.I. by engine calibration using a PRF blend having an O.N. close to that of the sample fuels to be rated.

14.3.1 Set the cylinder height to the barometric pressure compensated value for the O.N. of the selected PRF.

14.3.2 When using the analog knockmeter, determine the fuel level for maximum K.I. and then adjust the detonation meter, METER READING setting to produce a knockmeter reading of 50 ± 2 divisions. (No adjustment of the digital detonation meter is necessary.)

14.3.3 When using the analog knockmeter, check that detonation meter spread is maximized commensurate with satisfactory knockmeter stability. (No adjustment of the digital detonation meter is necessary.)

14.3.4 Analog Detonation meter spread set to 12 to 15 K.I. divisions per O.N. at the 90 O.N. level will typically provide suitably optimized spread settings for the range 80 to 103 O.N. without resetting. Refer to Annex A2.

AVA Documents
Document Sharing Hub

Full document details: ASTM D2699-24a

14.4 *Sample Fuel:*

14.4.1 Introduce the sample fuel to the carburetor, purge the fuel system, and if applicable, the sight glass and float reservoir by opening and then closing the sight glass drain valve several times and observing that there are no bubbles in the clear plastic tubing between the float reservoir and the sight glass. (**Warning—**Sample fuel is extremely flammable and its vapors are harmful if inhaled. Vapors may cause flash fire. See Annex A1.)

14.4.2 Operate the engine on sample fuel.

14.4.3 Make a preliminary adjustment to the cylinder height.

14.4.3.1 For the analog detonation meter, adjust the cylinder height to cause a mid-scale knockmeter reading.

14.4.3.2 For the digital detonation meter, it is not necessary to establish a mid-scale knockmeter reading.

NOTE 9—The digital detonation meter will typically exhibit peak to peak voltages between 0.05 V and 0.20 V at standard knock intensity.

14.4.4 Determine the fuel level for maximum K.I. One approach is to first lower the fuel level (float reservoir assembly) and then to raise it in small increments (0.1 sight glass divisions or less) until the knockmeter reading peaks and begins to fall off. Reset the float reservoir to the fuel level that produces the maximum knockmeter reading.

14.4.5 Make a second adjustment of the cylinder height.

14.4.5.1 For the analog detonation meter, adjust the cylinder height so that the knockmeter reading is 50 ± 2 divisions. (No adjustment of the digital detonation meter is necessary.)

14.4.5.2 For the analog detonation meter, when testing TSF blends (for which the rating is conducted at the guide table cylinder height setting for the ARV of the blend) it is permissible to adjust the detonation meter settings to obtain a knockmeter reading of 50 ± 2 divisions. (No adjustment of the digital detonation meter is necessary.)

14.4.6 Record the knockmeter reading. (For the digital panel, refer to the manufacturer's operation manual for the appropriate computer command to record knockmeter readings.)

14.4.7 Observe the cylinder height reading, compensated to standard barometric pressure, and using the appropriate guide table, determine the estimated O.N. of the fuel sample.

14.5 *Reference Fuel No. 1:*

14.5.1 Prepare a fresh batch of a PRF blend that has an O.N. estimated to be close to that of the sample fuel.

14.5.2 Introduce Reference Fuel No. 1 to the engine, and if applicable, purge the fuel lines in the same manner as noted for the sample fuel.

14.5.3 Position the fuel-selector valve to operate the engine on Reference Fuel No. 1 and perform the step-wise adjustments required for determining the fuel level for maximum K.I.

14.5.4 Record the equilibrium knockmeter reading for Reference Fuel No. 1.

14.6 *Reference Fuel No. 2:*

14.6.1 Select another PRF blend that can be expected to result in a knockmeter reading that causes the readings for the two reference fuels to bracket that of the sample fuel.

14.6.2 The maximum permissible difference between the two reference fuels is dependent on the O.N. of the sample fuel. Refer to Table 6.

14.6.3 Prepare a fresh batch of the second PRF blend.

14.6.4 Introduce Reference Fuel No. 2 to the engine, and if applicable, purge the fuel lines in the same manner as noted for the sample fuel.

14.6.5 Position the fuel-selector valve to operate the engine on Reference Fuel No. 2 and perform the required step-wise adjustments for determining the fuel level for maximum K.I.

14.6.6 If the knockmeter reading for the sample fuel is bracketed by those of the two PRF blends, continue the test; otherwise try another PRF blend(s) until the bracketing requirement is satisfied.

14.6.7 Record the equilibrium knockmeter reading for Reference Fuel No. 2.

14.7 *Repeat Readings:*

14.7.1 Perform the necessary steps to obtain repeat knockmeter readings on the sample fuel, Reference Fuel No. 2, and finally Reference Fuel No. 1. For each fuel, be certain that the fuel level used is that for maximum K.I. and allow operation to reach equilibrium before recording the knockmeter readings. The fuel switching for the complete rating shall be as illustrated in Fig. 6.

14.7.2 Refer to Section 18 for the detailed interpolation and calculation procedure.

14.7.3 The two knockmeter readings for the sample fuel and two for each of the PRF blends constitute a rating provided (*1*) the difference between the rating calculated from the first and second series of readings is no greater than 0.3 O.N., and when using the analog detonation meter, (*2*) the average of the sample fuel knockmeter readings is between 45 and 55. (Condition (*2*) is not applicable for the digital knockmeter.)

14.7.4 If the first and second series of knockmeter readings do not meet the criteria, a third series of readings may be obtained. The fuel switching order for this set shall be sample fuel, Reference Fuel No. 1, and finally Reference Fuel No. 2. The second and third series of knockmeter readings shall then constitute a rating provided the difference between the rating calculated from the second and third series of readings is no greater than 0.3 O.N., and when using the analog detonation meter, the average of the last two sample fuel knockmeter readings is between 45 and 55. (Condition (2) is not applicable for the digital knockmeter.)

14.8 *Checking Guide Table Compliance:*

TABLE 6 Permissible Bracketing PRF Blends

O.N. Range of Sample Fuel	Permissible PRF Blends
40 to 72	Maximum Permissible O.N. Difference of 4.0
72 to 80	Maximum Permissible O.N. Difference of 2.4
80 to 100	Maximum Permissible O.N. Difference of 2.0
100.0 to 100.7	Use only 100.0 and 100.7 O.N. PRF blends
100.7 to 101.3	Use only 100.7 and 101.3 O.N. PRF blends
101.3 to 102.5	Use only 101.3 and 102.5 O.N. PRF blends
102.5 to 103.5	Use only 102.5 and 103.5 O.N. PRF blends
103.5 to 108.6	Use only PRF blends 0.2 mL TEL/gal apart
108.6 to 115.5	Use only PRF blends 0.5 mL TEL/gal apart
115.5 to 120.3	Use only PRF blends 1.0 mL TEL/gal apart

AVA Documents
Document Sharing Hub

Full document details: ASTM D2699-24a