Designation: D2861 – 14

Standard Test Methods for Flexible Composites of Copper Foil with Dielectric Film or Treated Fabrics[1]

This standard is issued under the fixed designation D2861; the number immediately following the designation indicates the year of original adoption or, in the case of revision, the year of last revision. A number in parentheses indicates the year of last reapproval. A superscript epsilon (ε) indicates an editorial change since the last revision or reapproval.

1. Scope*

1.1 These test methods cover procedures for testing flexible materials consisting of copper foil combined with either dielectric film or with treated or impregnated fabric to form flexible composites used in the manufacture of flexible or multilayer circuitry, or both.

1.2 The procedures appear as follows:

Procedure	Section	ASTM Reference Method
Conditioning	5	
Flex Life of the Composite	20 – 25	
Peel Strength of the Composite	11 – 19	
Specimen Preparation	6	D1825
Strain Relief Due to Etching	26 – 32	
Testing of the Dielectric Portion of the Composite	7 – 10	D1825, D2305, D902

1.3 The values stated in inch-pound units are to be regarded as standard. The values given in parentheses are mathematical conversions to SI units that are provided for information only and are not considered standard.

1.4 *This standard does not purport to address all of the safety concerns, if any, associated with its use. It is the responsibility of the user of this standard to establish appropriate safety and health practices and determine the applicability of regulatory limitations prior to use.*

2. Referenced Documents

2.1 *ASTM Standards:*[2]

D902 Test Methods for Flexible Resin-Coated Glass Fabrics and Glass Fabric Tapes Used for Electrical Insulation

D1711 Terminology Relating to Electrical Insulation

D1825 Practice for Etching and Cleaning Copper-Clad Electrical Insulating Materials and Thermosetting Laminates for Electrical Testing (Withdrawn 2012)[3]

D2305 Test Methods for Polymeric Films Used for Electrical Insulation

D6054 Practice for Conditioning Electrical Insulating Materials for Testing (Withdrawn 2012)[3]

3. Terminology

3.1 *Definitions*—For definitions of terms used in this standard, refer to Terminology D1711.

4. Selection of Test Specimens

4.1 Select specimens for test from portions of material that are free of obvious defects, unless the purpose of the test is to evaluate these defects.

5. Conditioning

5.1 Unless otherwise specified, conduct all conditioning and testing in the standard laboratory atmosphere specified in Practice D6054. Condition specimens at least 18 h before testing.

6. Specimen Preparation

6.1 Prepare specimens by etching without scrubbing, using Practice D1825. It is possible that the etching reagents described in Practice D1825 will be incompatible with some composite materials. The use of other reagents shall be noted in the report for the test involved.

TESTING OF THE DIELECTRIC PORTION OF THE COMPOSITE

7. Significance and Use

7.1 The electrical and mechanical characteristics of circuits produced from flexible composites of copper foil with dielectric materials will, to a large extent, depend on the properties of the dielectric portion of the composite. Measurement of these properties is essential for predicting performance of the circuit.

[1] These test methods are under the jurisdiction of ASTM Committee D09 on Electrical and Electronic Insulating Materials and are the direct responsibility of Subcommittee D09.07 on Flexible and Rigid Insulating Materials.

Current edition approved Nov. 1, 2014. Published November 2014. Originally approved in 1970. Last previous edition approved in 2009 as D2861 – 87 (2009). DOI: 10.1520/D2861-14.

[2] For referenced ASTM standards, visit the ASTM website, www.astm.org, or contact ASTM Customer Service at service@astm.org. For *Annual Book of ASTM Standards* volume information, refer to the standard's Document Summary page on the ASTM website.

[3] The last approved version of this historical standard is referenced on www.astm.org.

***A Summary of Changes section appears at the end of this standard**

Copyright © ASTM International, 100 Barr Harbor Drive, PO Box C700, West Conshohocken, PA 19428-2959. United States

Documents
Document Sharing Hub
Full document details: ASTM D2861-14

8. Test Specimen

8.1 Take specimens as required from a sample that has been etched free of copper foil in accordance with Section 6. Take the thickness from the material that remains after etching.

9. Procedure

9.1 If the dielectric portion of the composite is a film, use the procedures described in Test Methods D2305.

9.2 If the dielectric portion of the composite is a treated fabric, use the procedures described in Test Methods D902.

10. Precision and Bias

10.1 This test method has been in use for many years, but no statement of precision has been available and no activity is planned to develop such a statement. A statement of bias is not applicable in view of the lack of a standard reference material for this property.

PEEL STRENGTH OF THE COMPOSITE

11. Significance and Use

11.1 The peel strength between copper foil and the dielectric material determines to what degree the composite can withstand processing and remain intact during service.

11.2 Flexible composites generally require more elaborate means for proper support during peel testing than do rigid, copper-clad laminates. The selection of the proper procedure will depend on the nature of the composite being tested, as shown by the following methods:

11.2.1 *Method A, Clamped Between Plates*—This test method is generally used when the material tested is not so flexible or slippery that it allows the substrate to deflect during the test.

11.2.2 *Method B, Using Adhesive Tape*— This test method is used principally for its convenience, but is limited to cases where the peel strength of the material is not so great as to allow lifting of the substrate from the plate during removal of the copper.

11.2.3 *Method C, Free-turning Drum*—This test method is also primarily used for its convenience, and is applicable where it is desired to prevent lifting of the dielectric material from the plate during removal of the copper.

12. Apparatus

12.1 *Force-measuring Instrument*—A strain gage, dial-type force meter, or similar instrument sensitive to 0.05 lbf (0.2 N).

12.2 *Chart Recorder* (optional)—A recording instrument capable of converting the force measured in 12.1 to a graphical record.

12.3 *Peeling Mechanism*—A device capable of peeling the copper from the dielectric at an angle of 90° to the specimen at a rate of 2 ± 0.1 in. (50 ± 3 mm)/min.

12.4 *Specimen Holder*—A device for clamping the specimen flat and in the correct position for testing with a minimum of the dielectric left unsupported. A device equivalent to that shown in Fig. 1 is required.

13. Test Specimen

13.1 Unless otherwise specified, prepare the test specimens to be a 2.5-in. (62-mm) square of the composite on which the pattern shown in Fig. 2 is etched, in accordance with Section 6. If necessary, it is acceptable to trim the dielectric portion to conveniently fit the apparatus being used.

13.2 Orient the pattern so that the long direction of the copper strips is either machine direction or cross-machine direction as, required.

14. Method A—Clamped Between Plates

14.1 Clamp the test specimen between the plates as shown in Fig. 1. Mount the plate horizontally.

14.2 Carefully initiate the removal of each of the copper strips by lifting the ½-in. (13-mm) land and peeling back to about 1 in. (25 mm).

14.3 Attach the free end of the strip to the force indicator by means of a clamp equipped with knurled jaws and a chain. Peel the strip the remaining 1-in. (25-mm) length at a rate of 2.0 ± 0.1 in. (50 ± 3 mm)/min. Repeat for each copper strip.

14.4 Determine the average peel force for each strip as follows:

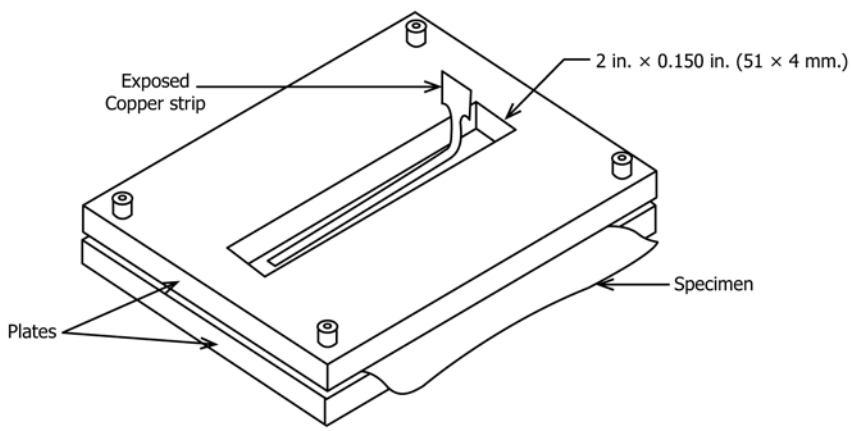

FIG. 1 Device for Holding Peel Specimen for Method A

Documents
Document Sharing Hub
Full document details: ASTM D2861-14