This international standard was developed in accordance with internationally recognized principles on standardization established in the Decision on Principles for the Development of International Standards, Guides and Recommendations issued by the World Trade Organization Technical Barriers to Trade (TBT) Committee.

Designation: D2892 – 24

Standard Test Method for Distillation of Crude Petroleum (15-Theoretical Plate Column)[1]

This standard is issued under the fixed designation D2892; the number immediately following the designation indicates the year of original adoption or, in the case of revision, the year of last revision. A number in parentheses indicates the year of last reapproval. A superscript epsilon (ε) indicates an editorial change since the last revision or reapproval.

1. Scope*

1.1 This test method covers the procedure for the distillation of stabilized crude petroleum (see Note 1) to a final cut temperature of 400 °C Atmospheric Equivalent Temperature (AET). This test method employs a fractionating column having an efficiency of 14 to 18 theoretical plates operated at a reflux ratio of 5:1. Performance criteria for the necessary equipment is specified. Some typical examples of acceptable apparatus are presented in schematic form. This test method offers a compromise between efficiency and time in order to facilitate the comparison of distillation data between laboratories.

NOTE 1—Defined as having a Reid vapor pressure less than 82.7 kPa (12 psi).

1.2 This test method details procedures for the production of a liquefied gas, distillate fractions, and residuum of standardized quality on which analytical data can be obtained, and the determination of yields of the above fractions by both mass and volume. From the preceding information, a graph of temperature versus mass % distilled can be produced. This distillation curve corresponds to a laboratory technique, which is defined at 15/5 (15 theoretical plate column, 5:1 reflux ratio) or TBP (true boiling point).

1.3 This test method can also be applied to any petroleum mixture except liquefied petroleum gases, very light naphthas, and fractions having initial boiling points above 400 °C.

1.4 This test method contains the following annexes and appendixes:

1.4.1 *Annex A1*—Test Method for the Determination of the Efficiency of a Distillation Column,

1.4.2 *Annex A2*—Test Method for the Determination of the Dynamic Holdup of a Distillation Column,

1.4.3 *Annex A3*—Test Method for the Determination of the Heat Loss in a Distillation Column (Static Conditions),

1.4.4 *Annex A4*—Test Method for the Verification of Temperature Sensor Location,

1.4.5 *Annex A5*—Test Method for Determination of the Temperature Response Time,

1.4.6 *Annex A6*—Practice for the Calibration of Sensors,

1.4.7 *Annex A7*—Test Method for the Verification of Reflux Dividing Valves,

1.4.8 *Annex A8*—Practice for Conversion of Observed Vapor Temperature to Atmospheric Equivalent Temperature (AET),

1.4.9 *Appendix X1*—Test Method for Dehydration of a Sample of Wet Crude Oil, and

1.4.10 *Appendix X2*—Practice for Performance Check.

1.5 The values stated in SI units are to be regarded as standard. The values given in parentheses after SI units are provided for information only and are not considered standard.

1.6 **WARNING**—Mercury has been designated by many regulatory agencies as a hazardous substance that can cause serious medical issues. Mercury, or its vapor, has been demonstrated to be hazardous to health and corrosive to materials. Use Caution when handling mercury and mercury-containing products. See the applicable product Safety Data Sheet (SDS) for additional information. The potential exists that selling mercury or mercury-containing products, or both, is prohibited by local or national law. Users must determine legality of sales in their location.

1.7 *This standard does not purport to address all of the safety concerns, if any, associated with its use. It is the responsibility of the user of this standard to establish appropriate safety, health, and environmental practices and determine the applicability of regulatory limitations prior to use.* For specific warning statements, see Section 10.

1.8 *This international standard was developed in accordance with internationally recognized principles on standardization established in the Decision on Principles for the Development of International Standards, Guides and Recommendations issued by the World Trade Organization Technical Barriers to Trade (TBT) Committee.*

[1] This test method is under the jurisdiction of ASTM Committee D02 on Petroleum Products, Liquid Fuels, and Lubricants and is the direct responsibility of Subcommittee D02.08 on Volatility.

Current edition approved May 1, 2024. Published June 2024. Originally approved in 1970. Last previous edition approved in 2023 as D2892 – 23. DOI: 10.1520/D2892-24.

*A Summary of Changes section appears at the end of this standard

Copyright © ASTM International, 100 Barr Harbor Drive, PO Box C700, West Conshohocken, PA 19428-2959. United States

Documents
Document Sharing Hub
Full document details: ASTM D2892-24

2. Referenced Documents

2.1 *ASTM Standards:*[2]

D941 Test Method for Density and Relative Density (Specific Gravity) of Liquids by Lipkin Bicapillary Pycnometer[3]

D1217 Test Method for Density and Relative Density (Specific Gravity) of Liquids by Bingham Pycnometer

D1298 Test Method for Density, Relative Density, or API Gravity of Crude Petroleum and Liquid Petroleum Products by Hydrometer Method

D2887 Test Method for Boiling Range Distribution of Petroleum Fractions by Gas Chromatography

D3710 Test Method for Boiling Range Distribution of Gasoline and Gasoline Fractions by Gas Chromatography (Withdrawn 2014)[4]

D4006 Test Method for Water in Crude Oil by Distillation

D4052 Test Method for Density, Relative Density, and API Gravity of Liquids by Digital Density Meter

D4057 Practice for Manual Sampling of Petroleum and Petroleum Products

D4177 Practice for Automatic Sampling of Petroleum and Petroleum Products

D5134 Test Method for Detailed Analysis of Petroleum Naphthas through n-Nonane by Capillary Gas Chromatography

D6300 Practice for Determination of Precision and Bias Data for Use in Test Methods for Petroleum Products, Liquid Fuels, and Lubricants

D6729 Test Method for Determination of Individual Components in Spark Ignition Engine Fuels by 100 Metre Capillary High Resolution Gas Chromatography

D6730 Test Method for Determination of Individual Components in Spark Ignition Engine Fuels by 100-Metre Capillary (with Precolumn) High-Resolution Gas Chromatography

D6733 Test Method for Determination of Individual Components in Spark Ignition Engine Fuels by 50-Metre Capillary High Resolution Gas Chromatography

3. Terminology

3.1 *Definitions:*

3.1.1 *adiabaticity, n*—the condition in which there is no significant gain or loss of heat throughout the length of the column.

3.1.1.1 *Discussion*—When distilling a mixture of compounds as is the case of crude petroleum, there will be a normal increase in reflux ratio down the column. In the case where heat losses occur in the column, the internal reflux is abnormally greater than the reflux in the head. The opposite is true when the column gains heat, as with an overheated mantle.

3.1.2 *atmospheric equivalent temperature (AET), n*—the temperature converted from the measured vapor temperature using equations in Annex A8.

3.1.2.1 *Discussion*—The AET is the expected vapor temperature if the distillation was performed at atmospheric pressure and there was no thermal decomposition.

3.1.3 *boilup rate, n—in distillation*, the quantity of vapor entering the column per unit of time.

3.1.4 *debutanization of crude petroleum, n*—the removal of the light hydrocarbons up to and including *n*-butane, and retention of the heavier hydrocarbons.

3.1.4.1 *Discussion*—In practice, a crude petroleum is regarded as debutanized if the light hydrocarbon cut collected in the cold trap contains more than 95 % of the C_2 to C_4 hydrocarbons and less than 5 % of the C_5 hydrocarbons initially present in the sample.

3.1.5 *distillation pressure, n*—the pressure measured as close as possible to the point where the vapor temperature is taken, normally at the top of the condenser.

3.1.6 *distillation temperature, n*—the temperature of the saturated vapor measured in the head just above the fractionating column.

3.1.6.1 *Discussion*—It is also known as the head temperature or the vapor temperature.

3.1.7 *dynamic hold-up, n—in column distillation*, the quantity of liquid held up in the column under normal operating conditions.

3.1.8 *flood point, n—in distillation*, the point at which the velocity of the upflowing vapors obstructs the down-coming reflux and the column suddenly fills with liquid.

3.1.9 *internal reflux, n—in distillation*, the liquid normally running down inside the column.

3.1.10 *pressure drop, n*—the difference between the pressure measured in the condenser and the pressure measured in the distillation flask.

3.1.10.1 *Discussion*—It is expressed in kilopascals (mm Hg) per metre of packed height for packed columns, or kilopascals (mm Hg) overall for real plate columns. It is higher for aromatics than for paraffins, and for higher molecular weights than for lighter molecules, at a given boilup rate.

3.1.11 *reflux ratio, R, n—in distillation*, the ratio of the condensate at the head of the column that is returned to the column (*reflux*) to that withdrawn as product.

3.1.12 *static hold-up or wettage, n*—the quantity of liquid retained in the column after draining at the end of a distillation.

3.1.12.1 *Discussion*—It is characteristic of the packing or the design of the plates, and depends on the composition of the material in the column at the final cut point and on the final temperature.

3.1.13 *takeoff rate, n— in distillation*, the volume of product withdrawn from the reflux divider over a specified period.

3.1.14 *theoretical plate, n*—the section of a column required to achieve thermodynamic equilibrium between a liquid and its vapor.

[2] For referenced ASTM standards, visit the ASTM website, www.astm.org, or contact ASTM Customer Service at service@astm.org. For *Annual Book of ASTM Standards* volume information, refer to the standard's Document Summary page on the ASTM website.

[3] Withdrawn. The last approved version of this historical standard is referenced on www.astm.org.

[4] The last approved version of this historical standard is referenced on www.astm.org.

AVA Documents
Document Sharing Hub

Full document details: ASTM D2892-24

3.1.14.1 *Discussion*—The height equivalent to one theoretical plate (HETP) for packed columns is expressed in millimetres. In the case of real plate columns, the efficiency is expressed as the percentage of one theoretical plate that is achieved on one real plate.

4. Summary of Test Method

4.1 A weighed sample of 1 L to 30 L of stabilized crude petroleum is distilled to a maximum temperature of 400 °C AET in a fractionating column having an efficiency at total reflux of at least 14, but not greater than 18, theoretical plates.

4.2 A reflux ratio of 5:1 is maintained at all operating pressures, except that at the lowest operating pressures between 0.674 kPa and 0.27 kPa (5 mm and 2 mm Hg), a reflux ratio of 2:1 is optional. In cooperative testing or in cases of dispute, the stages of low pressure, the reflux ratios, and the temperatures of cut points must be mutually agreed upon by the interested parties prior to beginning the distillation.

4.3 Observations of temperature, pressure, and other variables are recorded at intervals and at the end of each cut or fraction.

4.4 The mass and density of each cut or fraction are obtained. Distillation yields by mass are calculated from the mass of all fractions, including liquefied gas cut and the residue. Distillation yields by volume of all fractions and the residue at 15 °C are calculated from mass and density.

4.5 From these data the TBP curves in mass or volume percent, or both, versus AET are drawn.

5. Significance and Use

5.1 This test method is one of a number of tests conducted on a crude oil to determine its value. It provides an estimate of the yields of fractions of various boiling ranges and is therefore valuable in technical discussions of a commercial nature.

5.2 This test method corresponds to the standard laboratory distillation efficiency referred to as 15/5. The fractions produced can be analyzed as produced or combined to produce samples for analytical studies, engineering, and product quality evaluations. The preparation and evaluation of such blends is not part of this test method.

5.3 This test method can be used as an analytical tool for examination of other petroleum mixtures with the exception of LPG, very light naphthas, and mixtures with initial boiling points above 400 °C.

6. Apparatus

6.1 *Distillation at Atmospheric Pressure*—All components must conform to the requirements specified as follows. Automatic devices can be employed provided they meet the same requirements. A typical apparatus is illustrated in Fig. 1.

6.1.1 *Distillation Flask*—The distillation flask shall be of a size that is at least 50 % larger than the volume of the charge. The size of the charge, between 1.0 L and 30 L, is determined by the holdup characteristics of the fractionating column, as shown in Table 1 and described in Annex A2. The distillation flask shall have at least one sidearm.

6.1.1.1 The sidearm is used as a thermowell. It shall terminate about 5 mm from the bottom of the flask to ensure its immersion at the end of the distillation. When a second sidearm is present, it can be used for pressure drop detection with a nitrogen bleed or for mechanical stirring, or both.

6.1.1.2 If a magnetic stirrer is used with a spherical flask, the flask shall have a slightly flattened or concave area at the bottom on which the magnetic stirrer can rotate without grinding the glass. In this case, termination of the thermowell shall be off center 40 mm ± 5 mm to avoid the magnetic stirring bar. Boiling chips can be used as an alternative to a stirrer.

6.1.1.3 (**Warning**—While the advantage of visibility in glass distillation flasks is desirable, flasks of glass may become hazardous the larger the charge they contain. For this reason, glass flasks of a volume greater than 10 L are not recommended.)

6.1.2 *Heating System*—Heating of the flask shall be provided in such a way that full boilup can be maintained at a steady rate at all pressure levels. An electric heating mantle covering the lower half of the flask and having one third of the heat in an element located in the bottom central area and the remaining two thirds in the rest of the hemisphere is recommended. While proportioning controllers are preferred, heat input can be manually adjusted by use of a variable auto transformer on each circuit, the smaller heater being automatically controlled by an instrument sensing the pressure drop of the column as registered in a differential pressure instrument or alternatively by direct measurement of distillation rate.

6.1.2.1 Minimum wattage required to provide full boilup of crude petroleum is approximately 0.125 W/mL of charge. Twice this amount is recommended for quick heat-up.

6.1.2.2 The heat density in the flask heaters is approximately equal to 0.5 W/cm^2 to 0.6 W/cm^2. This requires the use of nickel-reinforced quartz fabric to ensure a reasonable service life.

6.1.2.3 Immersion heaters can be employed in a similar way and have the advantage of faster response, but they are more fragile and require a specially designed flask to ensure that the heating elements remain immersed at the end of the run. When used, their heat density should be approximately equal to 4 W/cm^2.

6.1.2.4 The upper half of the flask shall be covered with a mantle to avoid unnecessary heat losses from the upper surface and shall have an electric heater supplying about 0.25 W/cm^2 at full-rated voltage.

6.1.3 *Fractionating Column*—The fractionating column must contain either particulate packing or real plates similar to those whose performance characteristics are summarized in Table 1 and meet the specifications stated in 6.1.3.1 through 6.1.3.4. Table 2 lists current North American suppliers of suitable packings.

6.1.3.1 The internal diameter shall be between 25 mm and 70 mm.

6.1.3.2 The efficiency shall be between 14 and 18 theoretical plates at total reflux when measured by the procedure described in Annex A1.

AVA Documents
Document Sharing Hub

Full document details: ASTM D2892-24

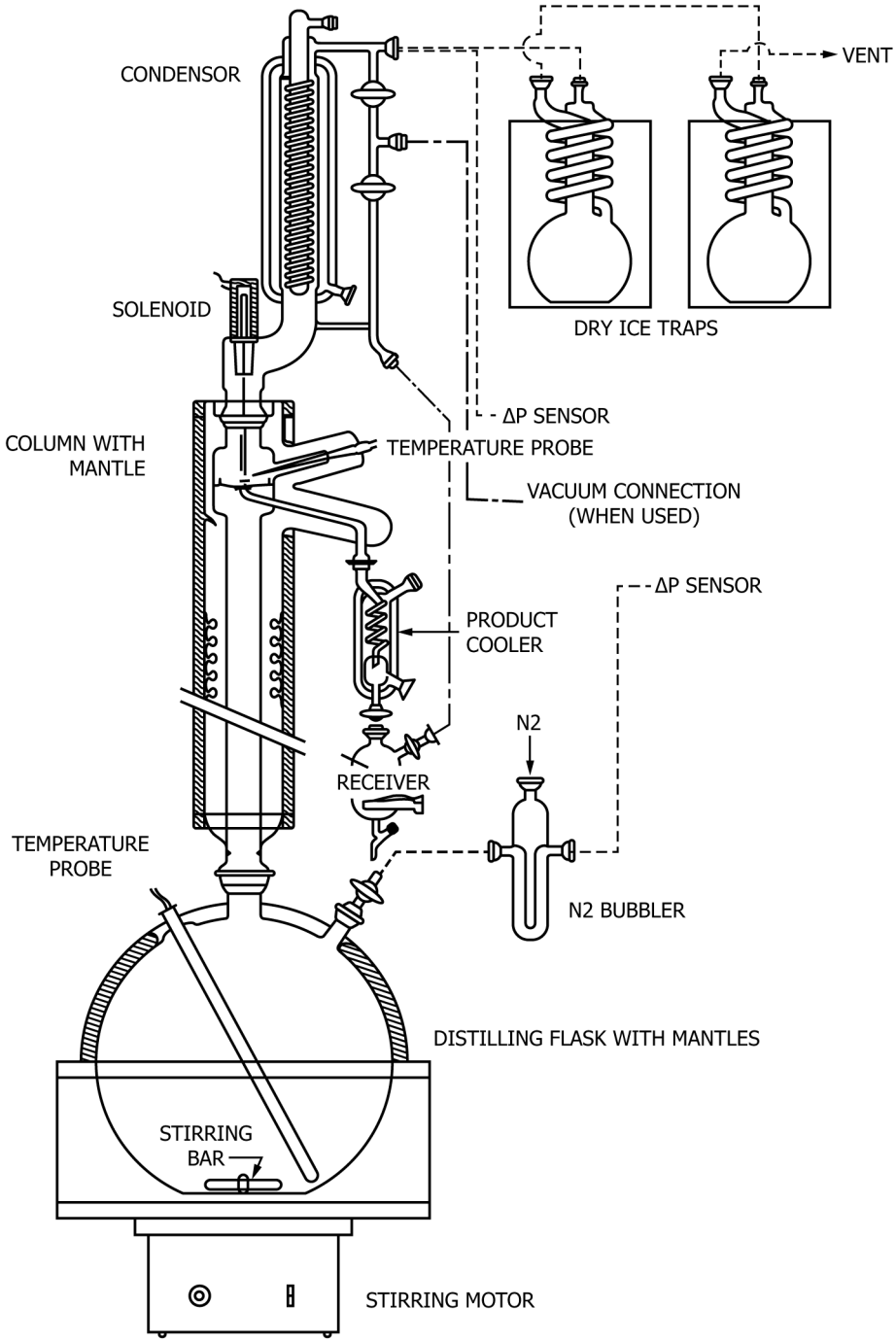

FIG. 1 Apparatus

6.1.3.3 The fractionating column shall be comprised of a integral glass column and reflux divider totally enclosed in a highly reflective vacuum jacket having a permanent vacuum of less than 0.1 mPa (~10^{-6} mm Hg). It shall be essentially adiabatic when tested in accordance with Annex A3.

NOTE 2—In the case of an adiabatic column when distilling a pure compound, the internal reflux is constant from top to bottom and is equal to the reflux at the reflux divider. When distilling crude petroleum, the fractionation occurring in the dynamic holdup will cause a temperature gradient to be established with attendant greater amount of internal reflux at the bottom of the column.

6.1.3.4 The column shall be enclosed in a heat-insulating system, such as a glass-fabric mantle, capable of maintaining the temperature of the outer wall of the glass vacuum jacket equal to that of the internal vapor temperature. To verify this, the vacuum jacket shall have a temperature sensor, such as a thermocouple, soldered to about 6 cm^2 of thin copper or brass sheet and fastened to the outer wall of the glass jacket at a level just below the reflux divider.

Documents
Document Sharing Hub

Full document details: ASTM D2892-24

TABLE 1 Data for *n*-Heptane-Methylcyclohexane Test Mixture at 75 % of Maximum Boilup and 101.3 kPa (760 mm Hg)

	Pro-Pak®[A,B,C,D,E]			Helipak[F,G,H]		Perforated Plates[E,I,J]		Wire Mesh[E,K]	
Column diameter, mm	25	50	70	25	50	25	50	25	50
Packing size, mm	4	6	6	No. 2917	No. 2918	NA[L]	NA[L]	NA[L]	NA[L]
Boilup, mL/h × cm ^{2}	650	670	675	300	350	640	660	810	1050
Dynamic holdup									
% of packed volume	17	15.3	17.0	15	14.3	NA[L]	NA[L]	8.0	10.0
mL/theoretical plate	3.2	16	39	1.6	8.7	2.8	12.3	2.0	12.9
Pressure drop									
kPa/m	1.2	1.05	0.94	1.53	1.41	NA[L]	NA[L]	0.97	0.75
mm Hg/m	9.0	7.9	7.1	11.5	10.6	NA[L]	NA[L]	7.3	5.6
kPa/theoretical plate	0.045	0.056	0.06	0.03	0.045	0.15	0.16	0.05	0.05
mm Hg/theoretical plate	0.34	0.42	0.43	0.24	0.34	1.1	1.2	0.35	0.37
HETP, mm (% of real plates)	38	53	61	21	32	(60 %)	(65 %)	48	66
For 15-plate Towers									
Packed height, cm (plates)	57	80	91	31.5	48	(25)	(23)	72	99
Packed volume, mL	280	1570	3460	155	917	NA[L]	NA[L]	353	1940
Dynamic holdup, mL	47	240	590	23	131	42	184	28	194
Pressure drop									
kPa	0.68	0.84	0.86	0.48	0.68	2.2	2.4	0.70	0.73
mm Hg	5.1	6.3	6.5	3.6	5.1	16.5	18.0	5.3	5.5
Charge volume, L									
Min (4 % Holdup)	1.2	6.0	15	0.575	3.3	1.0	4.6	0.7	4.9
Max (1 % Holdup)	4.8	24.0	60	2.3	13.0	4.2	10.4	2.8	19.4

[A] Cooke, G. M. and Jameson, B. G. *Analytical Chemistry*, Vol 27, 1955, p. 1798.
[B] Struck, R. T. and Kinner, C. R. *Industrial and Engineering Chemistry*, Vol 42, 1950, p. 77.
[C] Cannon, M. R. *Industrial and Engineering Chemistry*, Vol 41, No. 9, 1949, p. 1953.
[D] Performance Distillation Solutions, LLC., 270 Rolling Ridge Drive, Suite 160, Bellefonte, PA 16823, www.pdspropak.com.
[E] Cooke, G. M. *Analytical Chemistry*, Vol 39, 1967, p. 286.
[F] Bulletin of Podbielniak Div. of Reliance Glass Works, P.O. Box 825, Bensenville, IL 60106.
[G] Feldman, J., et al, *Industrial and Engineering Chemistry*, Vol 45, January 1953, p. 214.
[H] Helipak Performance Characteristics, Begemean, C. R. and Turkal, P. J. (Laboratory Report of Podbielniak Inc.), 1950.
[I] Umholtz, C. L. and Van Winkle, M. *Petroleum Refiner*, Vol 34, 1955, p. 114 for NH:MCH. Pressure Drop Calculated from data obtained on *o*- and *m*-xylene binary.
[J] Oldershaw, C. F. *Industrial and Engineering Chemistry*, Vol 13, 1941, p. 265.
[K] Bragg, L. B. *Industrial and Engineering Chemistry*, Vol 49, 1957, p. 1062.
[L] NA = not applicable.

TABLE 2 North American Sources of Commercially Available Packing Materials

Name	Size	Source
Pro-Pak®	4 mm by 4 mm 6 mm by 6 mm	Performance Distillation Solutions, LLC 270 Rolling Ridge Drive, Suite 160 Bellefonte, PA 16823 www.pdspropak.com
Helipak	2.5 mm by 4 mm	Reliance Glass Works Inc. P.O. Box 825 Bensenville, IL 60106
Perforated plates	25 mm and 50 mm	Reliance Glass Works Inc. P.O. Box 825 Bensenville, IL 60106 W.A. Sales Inc. 419 Harvester Ct. Wheeling, IL 60090
Knitted wire mesh- Goodloe multiknit		Pegasus Industrial Specialties Ltd. P.O. Box 319 Agincourt, Ontario MIS 3B9 Canada Packed Column Co. 970 New Durham Rd. Edison, NJ 08817

NOTE 3—For certain types of columns there is no significant difference in yields and fraction qualities between an uncompensated and a heat-compensated column. In such a case, by mutual agreement between parties concerned, the application of a heated insulating system can be omitted.

6.1.3.5 The adjustable reflux divider shall be located about one column diameter above the top of the packing or topmost plate. It must be capable of dividing the condensate with an accuracy of better than 90 % between the column and the takeoff line over an approximate range of rates from 10 % to 90 % of the maximum boil up rate of the column when determined in accordance with Annex A7.

6.1.4 *Condenser*—The condenser shall have sufficient capacity to condense essentially all the C_4 and C_5 vapors from the crude at the specified rate, using a coolant temperature of –20 °C.

6.1.5 *Cold Traps*—Two efficient traps of adequate capacity cooled by dry ice and alcohol mixture shall be connected in series to the vent line of the condenser when light hydrocarbons are present, as at the beginning of the distillation. For vacuum distillation, a Dewar-style trap also cooled by dry ice is used to protect the vacuum gauge from vapors.

6.1.6 *Gas Collector*—If uncondensed gas is to be measured, a gas meter can be connected to the outlet of the cold trap but with a calcium chloride drying tube between them to keep moisture from collecting in the traps. When analysis of the gas sample is required, the gas can be collected in an empty plastic balloon of suitable size either in place of the meter or following it. The volume of its contents can be determined by calculation from the rise in pressure after expanding the sample into an evacuated vessel of known volume.

6.1.7 *Fraction Collector*—This part of the apparatus permits the collection of the distillate without interruption during withdrawal of product from the receiver under atmospheric or reduced pressure. It also permits removal of product from the vacuum system without disturbing conditions in the column.

6.1.8 *Product Receivers*—The receivers shall be of suitable size for the quantity of crude petroleum being distilled. The

AVA Documents
Document Sharing Hub

Full document details: ASTM D2892-24

recommended capacity is from 100 mL to 500 mL. They shall be calibrated and graduated to permit reading to the nearest 1 %.

6.2 *Distillation Under Reduced Pressure*—In addition to the apparatus listed in 6.1, the apparatus for distillation under reduced pressure shall include the following:

6.2.1 *Vacuum Pump*—The vacuum system shall be capable of maintaining smooth pressure operation at all pressure levels. It shall have the capacity to draw down the pressure in the receiver(s) from atmospheric to 0.25 kPa (2 mm Hg) in less than 30 s so as to avoid disturbance of the system during emptying of receivers under vacuum. Alternatively, a separate pump can be employed for this purpose.

6.2.2 *Vacuum Gauge*—The point of connection of the vacuum gauge to the system shall be as close as practical to the reflux dividing head. The connecting tubing shall be of sufficient diameter to ensure that no measurable pressure drop occurs in the line. In no case shall the vacuum gauge connection be near the vacuum pump.

6.2.2.1 All gauges shall be carefully protected from condensable vapors, especially water vapor, by a cold trap maintained at the temperature of dry ice.

6.2.3 *Pressure Regulator*—The regulator shall maintain the pressure in the system essentially constant at all operating pressures. Automatic regulation can be achieved by a device that regulates the demand on the vacuum source. A satisfactory device is a solenoid valve positioned between the vacuum source and a surge tank of at least 10 L capacity. Alternatively, a manual bleed valve can be maintained by a trained operator with a minimum of attention.

6.3 *Sensing and Recording Apparatus:*

6.3.1 *Temperature Sensors*—Only temperature measurement systems meeting the requirements of 6.3.1.1 and 6.3.1.2 shall be used.

6.3.1.1 The vapor temperature sensor can be a platinum resistance thermometer, a Type J thermocouple with the junction head fused to the lower tip of the thermowell, or any other device that meets the requirements in this paragraph and 6.3.1.2. The tip of the sensor shall be located above the top of the packing or the topmost glass plate and in close proximity to the reflux divider but not in contact with the liquid reflux. The location of the vapor temperature sensor shall be proved by the test method described in Annex A4. The sensor shall have a cooling time of not more than 175 s, as described in Annex A5.

6.3.1.2 The vapor temperature measuring device shall have an accuracy of 0.5 °C or better and be measured with a resolution of 0.1 °C or better. The liquid temperature measuring device shall have an accuracy of 1.0 °C or better and be measured with a resolution of 0.5 °C or better. Temperatures are recorded either manually or automatically.

6.3.1.3 Temperature sensors shall be calibrated as described in Annex A6. Alternatively certified sensors may be used, provided the calibration of the sensor and its associated recording instrument can be traced back to a primary temperature standard. Temperature sensors are calibrated over the full range of temperature (from 0 °C to 327.4 °C) at the time of first use of the sensor in combination with its associated instrument. Recalibrate when either the sensor or the instrument is repaired or serviced. Verification of the calibration of the temperature sensors is to be made on a regular basis. For vapor temperature sensors, verification at least once a month is recommended and for liquid temperature sensors once every six months. Verification of the calibration of the sensors can be accomplished potentiometrically by the use of standard precision resistance or by distilling a pure compound with accurately known boiling point.

6.3.2 *Vacuum Gauge*—Primary standards, such as the non-tilting McLeod gauge, mercury manometer, or other analogous primary standard pressure devices can be used without calibration when properly used and maintained. A mercury manometer, however, will only be of satisfactory accuracy down to a pressure of about 1 kPa and then only when read with a good cathetometer (an instrument based on a telescope mounted on a vernier scale to determine levels very accurately). Alternatively, a tensimeter or certified electronic sensors may be used, provided the calibration of the sensor and its associated recording instrument can be traced back to a primary pressure standard. Sensors of the diaphragm type have

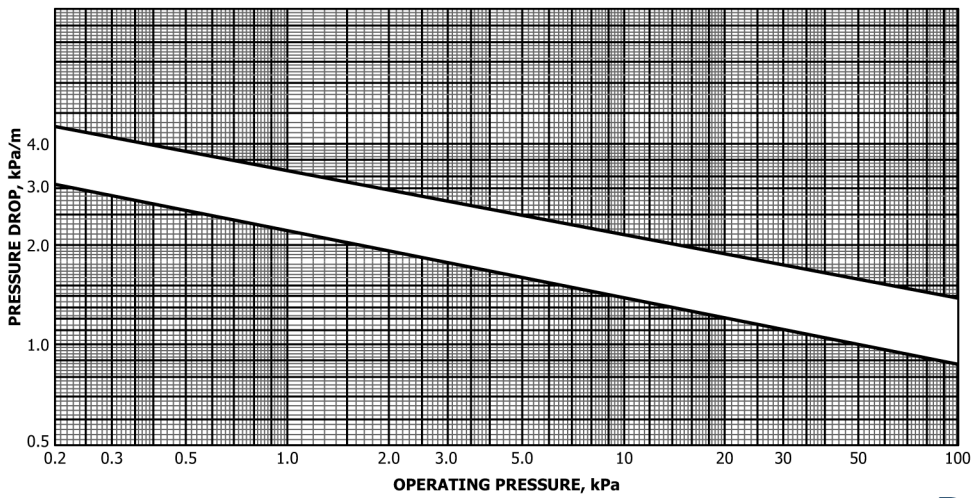

FIG. 2 Approximate Pressure Drop-Fractionators Using Pro-Pak®

Documents
Document Sharing Hub
Full document details: ASTM D2892-24

been found satisfactory. Vacuum gauges based on hot wires, radiation, or electrical conductivity detectors are not recommended.

6.3.2.1 The gauge for measuring subatmospheric pressures shall have an accuracy at least equal to that stated as follows:

Distillation Pressure		Accuracy	
kpa	mm Hg	kPa	mm Hg
100-13.3	760 to 100	0.13	1.0
13.3-1.33	99 to 10	0.013	0.1
1.33-0.266	9 to 2	0.006	0.06

6.3.2.2 Noncertified gauges shall be calibrated from a primary standard or a secondary electronic standard traceable to a primary standard. A basic calibration procedure is described in Annex A6. Recalibrate when either the sensor or the instrument is repaired or serviced. Verification of the calibration of the electronic pressure sensors is to be made on a regular basis. A frequency of at least once a month is recommended. Verification of the calibration of the sensors can be accomplished using the procedures described in Annex A6 or against a certified reference system.

6.3.3 *Boilup Rate*—The boilup rate is normally controlled by sensing the pressure drop in the column. The pressure drop during operation is measured by means of a manometer or pressure transducer connected between the flask and the condenser. Prevention of condensation in the connecting tube can be accomplished by injecting a very small flow of nitrogen (8 cm^3/s) between the pressure drop sensor manometer and the flask (see Fig. 1) or by placing a small water-cooled condenser between the flask and the pressure drop sensor. Alternatively, the boilup rate can be controlled from the measurement of take off rate.

7. Verification of Apparatus Performance

7.1 Test Method D2892 provides a standard framework for the laboratory distillation of crude oils in order to produce cuts of defined quality (for further testing) and the concurrent production of a boiling point curve. As the quantity requirements and cut points might be widely different between companies and application areas, this test method does not standardize on equipment design but on equipment performance.

7.2 The nature of the test method (the use of large sample quantities and very time consuming) and the nature of the product being tested (highly volatile and unstable material), precludes the use of standard statistical control techniques. Moreover, this test method does not produce a single result, nor is the series of results (the boiling point curve) derived under rigidly defined conditions (see 4.2).

7.3 Equipment performance in the context of Test Method D2892 consists of two elements; the efficiency of the column, defining cut quality, and the correctness of the cut point (AET), defining the boiling point curve.

7.4 The correctness of the AET is mainly, but not only, dependent on the accuracy of the (vapor) temperature and (operating) pressure sensors (Annex A6). Other factors affecting the accuracy and precision of the boiling point curve are:

7.4.1 The location of the temperature and pressure sensor (Annex A4).

7.4.2 The dynamic response of the sensors (Annex A5).

7.4.3 The correct operation of the reflux divider (Annex A7).

7.4.4 The heat loss from the column (Annex A3).

7.4.5 The efficiency of the column (Annex A1).

7.4.6 These factors are basically covered through the appropriate annexes. However, it should be realized that this takes care only of individual components and does not cover the combined effect of small deviations. Moreover, the aforementioned tests are all done under more or less static conditions, not necessarily representative for the behavior of the system under actual dynamic conditions.

7.5 Cut quality is mainly defined by the efficiency of the column (Annex A1), but is also affected by:

7.5.1 The correct operation of the reflux divider (reflux ratio) (Annex A7).

7.5.2 The heat loss from the column, that is, internal reflux (Annex A3).

7.5.3 The dynamic hold up of the column (Annex A2).

7.5.4 Column efficiency is covered in this test method through Table 1 and Annex A1. However, Table 1 only provides an assumption on efficiency and is not a guarantee. Annex A1 only provides a check under static conditions, infinite reflux ratio, rather low actual temperatures and a binary component system. Hence, although there is some safeguard on standard performance, through conformance to Annex A1, Annex A2, Annex A3, and Annex A7, again it remains questionable whether this is truly representative for columns under actual operating conditions.

7.6 Theoretically, an overall performance check, like the one described in Appendix X2, is capable of verifying the performance of a column and the correctness of the AET under actual operating conditions. Appendix X2, in principle, measures the combined effect of all factors affecting the results of Test Method D2892.

7.6.1 The minimum tray number as defined in Appendix X2 is a measure of overall cut quality, and the difference between nominal cut point (AET) and effective cut point (ECP as defined in Appendix X2) provides a measure for the correctness of the AET. However, insufficient data are available right now to define the allowable tolerances in a rigid statistical way. Moreover, the test method described is very labor intensive and precludes its use on a regular, short time interval basis and, therefore, its use as a mandatory statistical control technique.

7.6.2 Appendix X2, therefore, provides only recommended guidelines for statistical control on column performance, including both correctness of AET and column efficiency. It is the responsibility of the laboratory to provide for sufficient quality controls to guarantee conformance to the test method.

8. Sampling

8.1 Obtain a sample for distillation in accordance with instructions given in Practice D4057 or D4177. The sample must be received in a sealed container and show no evidence of leakage.

AVA Documents
Document Sharing Hub

Full document details: ASTM D2892-24

8.2 Cool the sample to between 0 °C and 5 °C by placing it in a refrigerator for several hours (preferably overnight) before opening.

8.3 If the sample appears waxy or too viscous, raise the temperature to 5 °C above its pour point.

8.4 Agitate the sample by whatever means are appropriate to its size to ensure that it is well mixed.

8.5 Determine the water content of the sample by Test Method D4006 or any other suitable method. If the water content exceeds 0.3 % volume, the sample shall be dehydrated prior to fractional distillation. A suitable practice for dehydration of wet crude oil samples is described in Appendix X1.

NOTE 4—Attempts to distill wet crude oil samples in glass columns might result in breakage of the glassware, which poses a potential fire hazard. Moreover, the presence of water will affect the accuracy of distillation yield in the naphtha region. These effects are more pronounced for heavy crude oils, containing low amounts of hydrocarbons boiling below 100 °C, than for light crudes where there is usually sufficient hydrocarbon vapor generated to form an azeotrope and drive the water vapors through the column without problems.

9. Preparation of Apparatus

9.1 Clean and dry the distillation column and all the ancillary glass apparatus before the distillation begins.

9.2 Ensure that the system is leak-free and all heaters, control devices, and instruments are on and in working order. A clock or other timing device should be ready for use.

10. Procedure

10.1 *Charging:*

10.1.1 The charge size shall be such that the dynamic hold up as determined in accordance with Annex A2 is between 1 % and 4 % of the charge when operating at 75 % of maximum boilup (see Table 1). Chill the flask to a temperature not lower then 0 °C.

10.1.2 Insert the stirring device or place some pieces of glass or porcelain into the flask to control bumping.

10.1.3 Determine the density of the sample by Test Method D941, D1217, or D1298.

10.1.4 Calculate to within ±5 % the mass of crude petroleum corresponding to the desired volume of the charge. Weigh to the nearest 1 % this quantity of sample into the flask.

10.1.5 Attach the flask to the column and connect the pressure drop measuring device. Install the heating system, stirrer, and support device. (**Warning**—Poisonous H_2S gas is frequently evolved from crude oil and precautions must be taken either to absorb the gas that passes through the cold trap or to vent it to a safe place.)

10.2 *Debutanization:*

10.2.1 For necessary apparatus refer to 6.1.5 and 6.1.6.

10.2.2 Begin circulation of refrigerant at a temperature no higher than −20 °C in the condenser, distillate cooler, and receiver, if so equipped.

10.2.3 Record the barometric pressure at the beginning and periodically throughout the distillation.

10.2.4 Apply heat to the flask at such a rate that vapors reach the top of the column between 20 min and 50 min after startup. Adjust heat input so as to achieve a pressure drop of less than 0.13 kPa/m (1.0 mm Hg/m) in packed columns or less than 0.065 kPa (0.5 mm Hg) in real plate columns. Program automated equipment in accordance with the preceding directions. Turn on the stirring device if used.

10.2.5 Allow the column to operate at total reflux until the vapor temperature reaches equilibrium but not longer than 15 min after the first drop of condensate appears in the reflux divider.

10.2.6 Record the vapor temperature as the initial vapor temperature.

10.2.7 Stop the circulation of the refrigerant and observe the vapor temperature. When the vapor temperature reaches 15 °C, start the circulation of refrigerant again.

10.2.8 If the vapor temperature drops below 15 °C, continue refluxing for at least 15 min. Repeat 10.2.7. If the vapor temperature remains at 15 °C or rises, continue with the atmospheric distillation. (**Warning**—The following three steps should not be done until after the first naphtha cut has been removed to ensure that all the light gases have been recovered.)

10.2.9 Remove and weigh the dry ice traps containing light hydrocarbon liquid after carefully wiping them dry.

10.2.10 Sample the contents of the first dry ice trap using a 10 mL to 50 mL pressure vessel evacuated to no lower than 26.6 kPa (200 mm Hg). Keep all containers at the temperature of dry ice to ensure no loss of volatiles. The first trap next to the condenser should contain all of the sample. If condensate is found in the second trap, sample both traps or combine the contents before sampling.

10.2.11 Submit the trap sample and gas balloon, if used, for analysis by a suitable gas chromatographic test method to be reported on a fixed-gas free basis. Test Methods D6729, D6730, and D6733, equipped with liquid or gas sampling valves, or both, for sample introduction equipment have been used successfully for this analysis.

10.3 *Distillation at Atmospheric Pressure:*

10.3.1 Maintain a temperature below −20 °C in the lines of the distillate cooler and receiver as well as in the condenser. Turn on the column mantle heat controller and maintain the column jacket temperature 0 °C to 5 °C below the vapor temperature.

10.3.2 Regulate the heat input as necessary to establish and maintain a boilup rate approximately 75 % of maximum. Fig. 3 can be used as a guide for Pro-Pak®. Rates for other sizes can be estimated by multiplying the boilup rate in Table 1 by the cross-sectional area of the column and dividing by the sum of the reflux ratio + 1.

NOTE 5—Boilup rate is expressed in millilitres of liquid per hour for a given column or in millilitres per hour per square centimetre of cross-sectional area for comparative purposes. In the latter case, it refers to the test mixture of *n*-heptane and methylcyclohexane in the efficiency evaluation (see Annex A1) and is measured at the bottom of the column. The maximum boilup of the *n*-heptane-methylcyclohexane test mixture is that which the column can handle under stable conditions without flooding. In routine adiabatic operation, the boilup rate can be estimated roughly from the takeoff rate multiplied by the reflux ratio plus one.

10.3.3 Commence takeoff at a reflux ratio of 5:1 and total cycle time of not over 36 s nor less than 24 s.

NOTE 6—The vapor reaching the top of the column is totally condensed

AVA Documents
Document Sharing Hub

Full document details: ASTM D2892-24

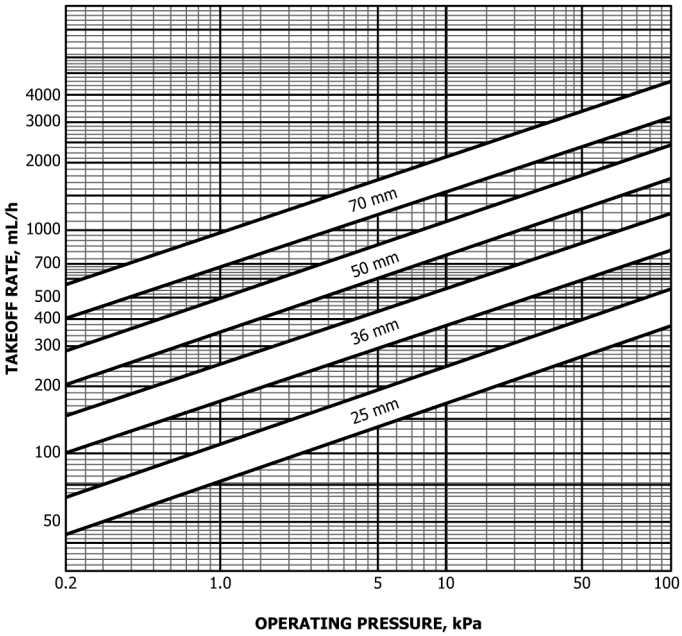

FIG. 3 Expected Takeoff Rates at 5:1 Reflux Ratio for Fractionators Using Pro-Pak®

and the resulting liquid is divided into two parts. One part *L* (reflux), is returned to the column and the other part, *D* (distillate), is withdrawn as product. The reflux ratio ($R = L/D$) can vary from zero at total takeoff ($L = 0$) to infinity at total reflux ($D = 0$).

10.3.4 Take off distillate in separate and consecutive fractions of suitable size. The recommended size of fraction is that corresponding to 5 °C or 10 °C in vapor temperature. Collect fractions boiling below 65 °C in receivers cooled to 0 °C or below. When the vapor temperature reaches 65 °C, refrigerant in the condenser and related coolers can be discontinued and water at ambient temperature substituted.

10.3.5 At the end of each fraction and at each cut point, record the following observations:

10.3.5.1 Time in hours and minutes,

10.3.5.2 Volume in millilitres,

10.3.5.3 Vapor temperature in °C to the nearest 0.5 °C,

10.3.5.4 Temperature of the boiling liquid in °C to the nearest 1 °C,

10.3.5.5 Atmospheric pressure in kPa (mm Hg), and

10.3.5.6 Pressure drop in the column in kPa (mm Hg).

10.3.6 If signs of flooding are observed, reduce the heating rate while continuing takeoff until steady conditions are restored. If a cut point is encountered during this period, stop the distillation, cool the charge, and recombine the off-condition cuts. Restart the distillation with a period at total reflux, not to exceed 15 min, to restore operating conditions before continuing takeoff. Do not make a cut within 5 °C of startup.

10.3.7 Continue taking cuts until the desired maximum vapor temperature is reached or until the charge shows signs of cracking. Pronounced cracking is evidenced by a fog appearing in the flask and later at the reflux divider. Do not allow the vapor temperature to exceed 210 °C nor the temperature of the boiling liquid to exceed 310 °C.

10.3.8 Shut off the reflux valve and the heating system. Allow the contents to cool to such a temperature that the distillation can be commenced at 13.3 kPa (100 mm Hg) without flooding. This temperature can be estimated by adding the ΔT between the liquid and vapor temperatures found for the column during atmospheric operation to the expected initial vapor temperature at the reduced pressure, or by subtracting the ΔT from the last recorded liquid temperature.

NOTE 7—Cooling of the liquid in the flask can be accelerated by blowing a gentle stream of compressed air onto the flask after its heating mantle has been removed. Avoid strong jets of cold air. Alternately, turn on coolant in the quench coil of the flask, if used.

10.3.9 Weigh all fractions and determine their densities.

10.3.10 Submit the first distillate fraction for analysis by gas chromatography.

10.4 *Distillation at 13.3 kPa (100 mm Hg):*

10.4.1 If further cuts at higher temperatures are required, distillation can be continued at reduced pressures, subject to the maximum temperature that the boiling liquid will stand without significant cracking. This is about 310 °C in most cases. Notable exceptions are crude oils containing heat-sensitive sulfur compounds. In any case, do not make a cut within 5 °C of the temperature at startup because the column will not be at equilibrium.

10.4.2 Connect a vacuum pumping and control system to the apparatus as shown in Fig. 1.

10.4.3 Start the vacuum pump and adjust the pressure downward gradually to the value of 13.3 kPa (100 mm Hg) or set the pressure regulator at this value. The temperature of the liquid in the flask must be below that at which it will boil at 13.3 kPa (100 mm Hg). If the liquid boils before this pressure is reached, increase the pressure and cool further until the desired pressure can be achieved without boiling.

10.4.4 Apply heat to the boiler and reestablish reflux at any moderate rate in the reflux divider for about 15 min to reheat the column to operating temperature. Momentarily stop heat input and raise the pressure with N_2 for 1 min to drop the holdup into the distillation flask.

10.4.5 Reapply heat to the distillation flask and adjust the rate of heating to maintain a constant pressure drop equivalent to the boilup rate of approximately 75 % of the maximum rate for this pressure and begin takeoff without delay. The approximate pressure drops required for this purpose are indicated in Fig. 3. Maintain a column insulation temperature 0 °C to 5 °C below the vapor temperature throughout the operation.

10.4.6 Remove separately, cuts of suitable size as in 10.3.4.

10.4.7 At the end of each distillate fraction and at each cut point, record the following observations:

10.4.7.1 Time in hours and minutes,

10.4.7.2 Volume in millilitres observed at ambient temperature,

10.4.7.3 Vapor temperature in °C to the nearest 0.5 °C with correction, if any,

10.4.7.4 Temperature of the boiling liquid in °C to the nearest 1 °C,

10.4.7.5 Pressure drop in the column in kPa (mm Hg),

10.4.7.6 Operating pressure measured at the top of the column in kPa (mm Hg) absolute with correction, if any, and

AVA Documents
Document Sharing Hub

Full document details: ASTM D2892-24

10.4.7.7 AET using the equations given in Annex A8.

10.4.8 Continue taking cuts until the desired maximum point is reached or until the charge shows signs of cracking. Pronounced cracking is evidenced by the evolution of gases as indicated by rising pressure as well as a fog appearing in the flask (see Note 7). Do not allow the temperature of the boiling liquid to exceed 310 °C. (**Warning**—Automatic vacuum controllers could mask a slight rise in pressure due to cracking. Vigilance is required to avoid this.)

10.4.9 Shut off the reflux valve and the heating system. Allow the contents to cool to such a temperature that the distillation can be commenced at a lower pressure without boiling. This temperature can be estimated by adding the ΔT between the liquid and vapor temperatures found for the column during operation to the expected initial vapor temperature at the lower pressure, or by subtracting the ΔT from the last recorded liquid temperature.

10.4.10 Weigh all fractions and determine their densities at 15 °C.

10.5 *Distillation at Lower Pressures:*

10.5.1 If the final cut point has not been reached, distillation can be continued at a lower pressure subject to the same limitation as before (see 10.4.1). Only one pressure level between 13.3 kPa (100 mm Hg) and 0.266 kPa (2 mm Hg) is permitted. Where the maximum cut point is 400 °C AET, the minimum pressure is recommended.

10.5.2 Adjust the pressure to the desired level. If the liquid boils before the pressure is reached, increase the pressure and cool further until the desired pressure can be achieved without boiling. Follow the procedure in 10.4.4.

10.5.3 Circulate cooling water in the condenser and liquid cooler either at ambient temperature or warmed to a temperature that will ensure that wax does not crystallize in the condenser or takeoff lines. Alternatively, leave the cooling coils full of water but vented and not circulating, or else circulate a stream of air instead of water as a coolant.

10.5.4 Continue vacuum operation as in 10.4.5 through 10.4.8. During this operation, a reflux ratio of 2:1 is allowed if mutually agreed upon in advance and noted in the report. Correct observed and corrected vapor temperatures to AET using the equations given in Annex A8.

10.5.5 Check periodically that the condensate drips normally in the condenser and that the distillate flows smoothly into the takeoff line. If crystallization is observed, allow the coolant in the condenser to warm as in 10.5.3.

10.5.6 When the final cut point has been reached, or when limits of boiling liquid temperature and column pressure prevent further distillation, turn off the reflux valve and heating system and allow to cool with the vacuum still applied.

10.5.7 When the temperature of the residue in the flask has fallen below 230 °C, shut off the vacuum pump. Vent the fractionating unit with nitrogen or other inert gas. Do not use air. (**Warning**—Air is suspected of initiating explosions in fractionating units that are vented while too hot, such as at the end of a run.)

10.5.8 Stop circulation of coolant in the condenser and ancillary equipment. Disconnect the flask. Recover the static holdup of the column (wettage) by distilling a small quantity of solvent such as toluene in a separate flask to wash the column, condenser, and takeoff system. Evaporate the solvent from the collected residue at 10 °C above the boiling point of the solvent, using a small purge of nitrogen. For distillations not involving disagreement, or by mutual consent, the holdup can be estimated using a graph similar to Fig. 4. The density of the holdup is estimated by extrapolation of the density line for the preceding cuts. The static holdup can be treated as a separate small cut or blended into the bottoms before inspections are made. The latter must be done if other analyses besides density are to be performed on the residue.

10.5.9 Weigh all fractions and the residue in the flask and determine their densities at 15 °C by Test Method D4052 or by another suitable method. Convert the density to 15 °C, if necessary.

NOTE 8—Heavier flasks, such as those for 50 mm and 70 mm diameter columns, are not normally removed for weighing. In these cases the residue can be discharged at a temperature not over 200 °C into a tared container for weighing. Nitrogen pressure of approximately 6.7 kPa (50 mm Hg) will be sufficient for this. Wettage in these cases will include that of the column and the flask together.

11. Calculation

11.1 Calculate the mass % of each distillate fraction and the residue to the 0.1 % by mass, using Eq 1.

$$\text{mass } \% = 100(m/M) \tag{1}$$

where:

m = mass of fraction or residue, g, and
M = mass of dry crude oil charged, g.

11.1.1 The first fraction is the gas fraction collected in the balloon. If this fraction is less than 0.1 % by mass, it can be ignored.

11.1.2 The second fraction (or first, if no gas is collected) is the condensate in the dry ice trap. With density at 15 °C calculated from the gas chromatographic data on a fixed gas free basis, its volume can be computed.

11.1.3 The holdup is treated either as a separate cut or added to the residue fraction, in accordance with agreement. The amount of holdup is determined by actual recovery by solvent washing, as directed in 10.5.8, or estimated from Fig. 4.

11.2 Calculate the percent loss to the nearest 0.1 % by mass, using Eq 2.

$$\text{Loss} = 100 - \left(\sum 100(m/M)\right) \tag{2}$$

The weight loss as calculated above must not be greater than 0.4 %, otherwise the distillation must be discarded. Losses less than this should be allocated two-thirds to the trap cut and one-third to the first naphtha cut. Where there is no trap cut, the acceptable losses are to be normalized among all cuts.

11.3 Calculate the volume of the sample of crude oil in millilitres at 15 °C, using Eq 3.

$$V = (M/D) \tag{3}$$

where:

D = density of charge at 15 °C, g/mL,
M = mass of dry charge, g, and
V = volume of charge, mL.

Documents
Document Sharing Hub

Full document details: ASTM D2892-24

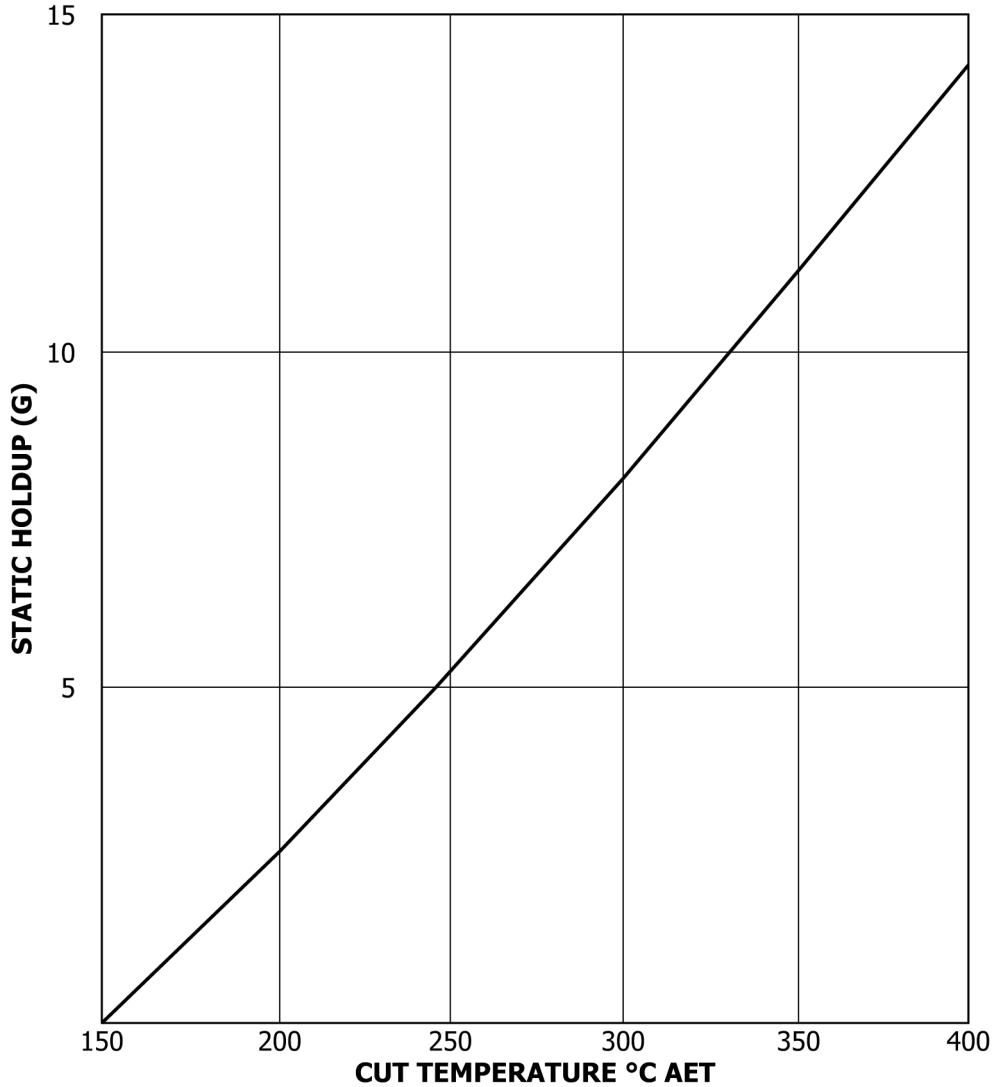

FIG. 4 Approximate Static Holdup for Average Crude Oil Using 4 mm Pro-Pak® in a 25 mm ID × 570 mm Column

11.4 Calculate the volume of each fraction and of the residue in millilitres at 15 °C, using Eq 4.

$$v = m/d \tag{4}$$

where:

d = density of the fraction or residue at 15 °C, g/mL,
m = mass of fraction or residue corrected for loss, g, and
v = volume of fraction, mL.

11.5 Calculate the volume % of each distillate fraction to the nearest 0.1 % by volume, using Eq 5.

$$\text{vol } \% = 100(v/V) \tag{5}$$

11.6 Calculate the volume % gain or loss to the nearest 0.1 % by volume, using Eq 6.

$$\text{Loss} = 100 - \left(\sum 100(v/V)\right) \tag{6}$$

Usually, the above expression is negative due to volume expansion. Normalize any apparent expansion or contraction among fractions boiling below 150 °C in proportion to their yields.

NOTE 9—In view of the foregoing rules for establishing yields, the ratio of mass to volume is not precise enough to be used to calculate the density of any distillate fractions or residue.

12. Report

12.1 A summary sheet for the run must include:

12.1.1 The mass of the dry sample charged, g,

12.1.2 The density of the sample at 15 °C, g/mL,

12.1.3 The volume of the sample at 15 °C, mL,

12.1.4 The gain or loss in mass and volume to the nearest 0.1 %,

12.1.5 The volume and mass % of each fraction to the nearest 0.1 %,

12.1.6 The cumulative volume and mass percentages, and

12.1.7 The mass of water, if any.

12.2 The gas, debutanized naphtha, and succeeding fractions are listed in order of ascending boiling point with residue recorded last.

AVA Documents
Document Sharing Hub

Full document details: ASTM D2892-24