NOTICE: This standard has either been superseded and replaced by a new version or withdrawn.
Contact ASTM International (www.astm.org) for the latest information

Designation: D2947 – 88 (Reapproved 2006)

Standard Test Method for Screen Analysis of Asbestos Fibers[1]

This standard is issued under the fixed designation D2947; the number immediately following the designation indicates the year of original adoption or, in the case of revision, the year of last revision. A number in parentheses indicates the year of last reapproval. A superscript epsilon (ε) indicates an editorial change since the last revision or reapproval.

1. Scope

1.1 This test method covers a dry screen analysis for asbestos fiber by means of a mechanical sieve shaker.

1.2 This test method is limited in its application to Group 4 and shorter chrysotile asbestos fiber samples[2] as defined in Test Method D3639. However, some short amphibole asbestos fibers may be suitable for evaluation by this method.

1.3 The values stated in SI units are standard. The inch-pound (customary) units in brackets are presented for information only.

1.4 **Warning**—Breathing of asbestos dust is hazardous. Asbestos and asbestos products present demonstrated health risks for users and for those with whom they come into contact. In addition to other precautions, when working with asbestos-cement products, minimize the dust that results. For information on the safe use of chrysoltile asbestos, refer to "Safe Use of Chrysotile Asbestos: A Manual on Preventive and Control Measures."[3]

1.5 *This standard does not purport to address all of the safety concerns, if any, associated with its use. It is the responsibility of the user of this standard to establish appropriate safety and health practices and determine the applicability of regulatory limitations prior to use. For specific safety hazard, see 1.4.*

2. Referenced Documents

2.1 *ASTM Standards:*[4]

D2590 Test Method for Sampling Chrysotile Asbestos
D2946 Terminology for Asbestos and Asbestos–Cement Products
D3639 Test Method for Classification of Asbestos by Quebec Standard Test
D3879 Test Method for Sampling Amphibole Asbestos
E11 Specification for Woven Wire Test Sieve Cloth and Test Sieves
E177 Practice for Use of the Terms Precision and Bias in ASTM Test Methods

3. Summary of Method

3.1 The procedure consists of screening a test specimen through a specified nest of sieves by means of a mechanical sieve shaker that reproduces the circular and tapping motion given testing sieves in hand-sieving, but with a uniform, mechanical action, assuring more accurate and dependable tests.

4. Significance and Use

4.1 Test results give some indication of the apparent fiber length distribution in the sample tested.

4.2 Sieves are ideally suited to measure particle size and particle size distribution when all three axes of the particle are equidimensional or the particle is of spherical shape. Asbestos fibers differ considerably from these ideal conditions and, therefore, results depart from a true measure of fiber length and length distribution.

4.3 Characteristics that influence screening efficiency influence test results. Among these are moisture content, degree of fiberization, harshness, and the tendency for fibers to cling together, and of short fibers and fines to cling to longer fibers.

4.4 In spite of its shortcomings, this test method is particularly useful because of its simplicity and speed and satisfactory reproducibility.

4.5 The test is suitable for specification acceptance and manufacturing control.

5. Apparatus

5.1 *Sieve Shaker*[5] for 200-mm (8-in.) diameter sieves that impart the screening and tapping action found necessary for this asbestos application.

---

[1] This method is under the jurisdiction of ASTM Committee C17 on Fiber-Reinforced Cement Products and is the direct responsibility of Subcommittee C17.03 on Asbestos-Cement Sheet Products and Accessories.

Current edition approved June 1, 2006. Published June 2006. Originally approved in 1971. Last previous edition approved in 2002 as D2947 – 88 (2002)$^{\varepsilon 1}$. DOI: 10.1520/D2947-88R06.

[2] Quebec Asbestos Mining Assn. (QAMA) standard designation of chrysotile asbestos grades.

[3] Available from The Asbestos Institute, http://www.chrysotile.com/en/sr_use/manual.htm.

[4] For referenced ASTM standards, visit the ASTM website, www.astm.org, or contact ASTM Customer Service at service@astm.org. For *Annual Book of ASTM Standards* volume information, refer to the standard's Document Summary page on the ASTM website.

[5] The Tyler Ro-Tap has been found satisfactory for this purpose. The criteria, settings, and adjustments specified in 5.1.2 to 5.1.6 have been found to provide reproducible results with this unit. Any other mechanical shaker that imparts to the nest of sieves a motion identical to that of this device, and that can reproduce results achieved with the Ro-Tap would be acceptable as being equivalent thereto. If you are aware of alternative suppliers, please provide this information to ASTM International Headquarters. Your comments will receive careful consideration at a meeting of the responsible technical committee,[1] which you may attend.

Copyright © ASTM International, 100 Barr Harbor Drive, PO Box C700, West Conshohocken, PA 19428-2959, United States.

Full document details: ASTM D2947-88(2006)

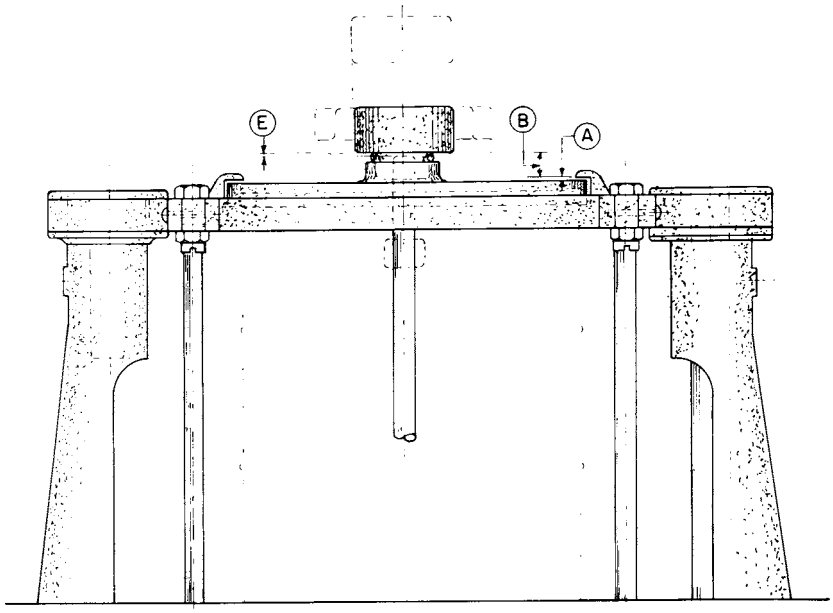

FIG. 1 Sieve Shaker

5.1.1 The shaker shall be mounted on a suitable firm foundation, preferably concrete.

5.1.2 The eccentric shaft shall rotate at a speed of 285 ± 5 r/min. The machine shall be geared to give 152 taps/min when the eccentric shaft rotates at 285 r/min.

5.1.3 The plate supporting the nest of sieves must be set to give a clearance of 2.4 ± 0.8 mm (3/32 ± 1/32 in.) between the top of the cast iron cover and the bottom of the stops on the carrying plate (dimension *A* in Fig. 1). This clearance is sufficient to allow the nest of sieves to be easily set in place and to rotate freely when the shaker is in operation. It is important that this gap be checked periodically in order to maintain proper sieving action.

5.1.4 The cast iron cover for the nest of sieves shall be fitted with a standard No. 9 rubber stopper made of neoprene or other elastomer of equal elasticity.

5.1.5 The height of the stopper above the top of the cast iron cover plate shall be 25.4 ± 3.2 mm (1 ± 1/8 in.) (dimension *A* plus *B* in Fig. 1) measured with the hammer resting on the stopper. With a new stopper this measurement should be taken only after the machine has been in operation for a few hours and should be set as closely as possible to the maximum setting of 28.6 mm (1 1/8 in.).

5.1.6 The center of the hammer is a point in the center of the face 244.5 ± 0.4 mm (9 5/8 ± 1/64 in.) from the center of the hammer pin. The hammer drop, measured from the center of the hammer in its highest position to the top of the stopper, shall be 34.9 ± 3.2 mm (1 3/8 ± 1/8 in.). The hammer drop may be adjusted by adjustments in the top end of the push rod (Fig. 2) or adjustments in the location of the push rod collar, or by both adjustments. A minimum clearance of 1.6 mm (1/16 in.) between the push rod and the hammer in its lower position (dimension *E* in Fig. 1) should be maintained.

5.1.7 *Automatic Timer or Timeswitch* to energize the shaker with an accuracy of ±5 s, on periods extending from 10 to 30 min.

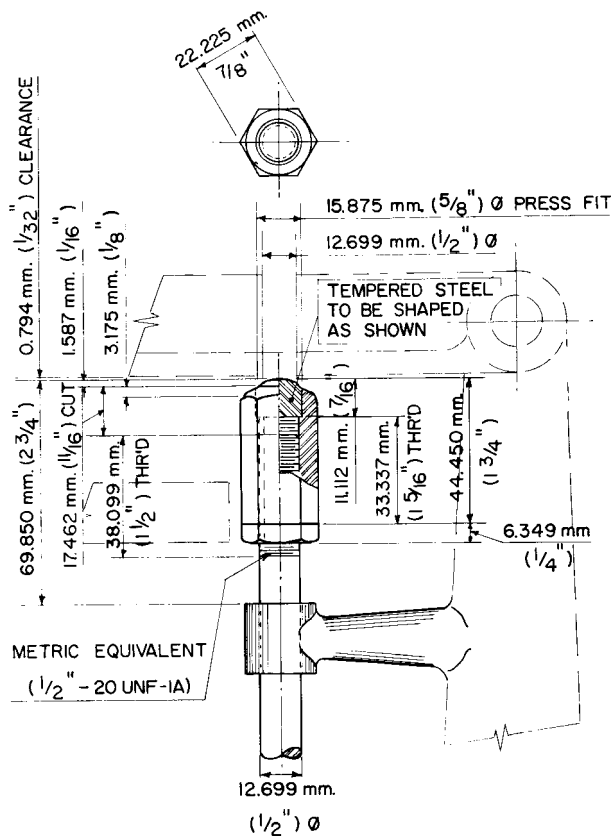

FIG. 2 Adjustable Push Rod

5.2 *Sieves*:

5.2.1 Standard 20 cm (8-in.) diameter covers, sieve frames, and pans shall be used. Sieve frames and pans shall be full height. Wire cloth of sieves, covers, frames and pans shall conform to Specification E11, except that stainless steel may be used in place of sheet brass if desired. Alternatively, equivalent Tyler Standard Sieves may be used.

AVA Documents
Document Sharing Hub

Full document details: ASTM D2947-88(2006)