NOTICE: This standard has either been superseded and replaced by a new version or withdrawn.
Contact ASTM International (www.astm.org) for the latest information

Designation: D297 – 93(Reapproved 2006)

Standard Test Methods for Rubber Products—Chemical Analysis[1]

This standard is issued under the fixed designation D297; the number immediately following the designation indicates the year of original adoption or, in the case of revision, the year of last revision. A number in parentheses indicates the year of last reapproval. A superscript epsilon (ε) indicates an editorial change since the last revision or reapproval.

This standard has been approved for use by agencies of the Department of Defense.

1. Scope

1.1 These test methods cover the qualitative and quantitative analysis of the composition of rubber products of the "R" family (see 3.1). Many of these test methods may be applied to the analysis of natural and synthetic crude rubbers.

1.1.1 *Part A* consists of general test methods for use in the determination of some or all of the major constituents of a rubber product.

1.1.2 *Part B* covers the determination of specific polymers present in a rubber product.

1.1.3 The test methods appear in the following order:

Part A. General Test Methods:	Sections
Rubber Polymer Content by the Indirect Method	11-13
Determinations and Report for the General Method	14 and 15
Density	16
Extract Analysis	17-26
Sulfur Analysis	27-33
Fillers Analysis	34-40
Ash Analysis	41-51
Part B. Determination of Rubber Polymers	52-58

1.2 The values stated in SI units are to be regarded as standard. The values given in parentheses are for information only.

1.3 *This standard does not purport to address all of the safety concerns, if any, associated with its use. It is the responsibility of the user of this standard to establish appropriate safety and health practices and determine the applicability of regulatory limitations prior to use.* Specific precautionary or warning statements are given in 31.4.5, 31.6, 37.4.2, 38.4.2, 45.1.3, 53.2.3.5, 54.4.2, 54.6, 56.5.3, and 57.7.3; and X1.3.3 and X2.4.1.6.

2. Referenced Documents

2.1 *ASTM Standards:*[2]

D982 Test Method for Organic Nitrogen in Paper and Paperboard

D1416 Test Methods for Rubber from Synthetic Sources—Chemical Analysis (Withdrawn 1996)[3]

D1418 Practice for Rubber and Rubber Latices—Nomenclature

D1646 Test Methods for Rubber—Viscosity, Stress Relaxation, and Pre-Vulcanization Characteristics (Mooney Viscometer)

D3040 Practice for Preparing Precision Statements for Standards Related to Rubber and Rubber Testing (Withdrawn 1987)[3]

D3156 Practice for Rubber—Chromatographic Analysis of Antidegradants (Antioxidants, Antiozonants and Stabilizers)

D3452 Practice for Rubber—Identification by Pyrolysis-Gas Chromatography

D3677 Test Methods for Rubber—Identification by Infrared Spectrophotometry

D4483 Practice for Evaluating Precision for Test Method Standards in the Rubber and Carbon Black Manufacturing Industries

E11 Specification for Woven Wire Test Sieve Cloth and Test Sieves

E131 Terminology Relating to Molecular Spectroscopy

E200 Practice for Preparation, Standardization, and Storage of Standard and Reagent Solutions for Chemical Analysis

E442 Test Method for Chlorine, Bromine, or Iodine in Organic Compounds by Oxygen Flask Combustion (Withdrawn 1996)[3]

E443 Test Method for Sulfur in Organic Compounds by Oxygen Flask Combustion (Withdrawn 1996)[3]

3. Terminology

3.1 *Definitions*—The nomenclature and abbreviations used for natural and synthetic rubbers are in accordance with Practice D1418.

[1] These test methods are under the jurisdiction of ASTM Committee D11 on Rubber and are the direct responsibility of Subcommittee D11.11 on Chemical Analysis.

Current edition approved Oct. 1, 2006. Published November 2006. Originally approved in 1928. Last previous edition approved in 2002 as D297 – 93 (2002). DOI: 10.1520/D0297-93R06.

[2] For referenced ASTM standards, visit the ASTM website, www.astm.org, or contact ASTM Customer Service at service@astm.org. For *Annual Book of ASTM Standards* volume information, refer to the standard's Document Summary page on the ASTM website.

[3] The last approved version of this historical standard is referenced on www.astm.org.

Copyright © ASTM International, 100 Barr Harbor Drive, PO Box C700, West Conshohocken, PA 19428-2959. United States

Documents
Document Sharing Hub
Full document details: ASTM D297-93(2006)

4. Reagents

4.1 *Purity of Reagents*—Reagent grade chemicals shall be used in all tests. Unless otherwise indicated, it is intended that all reagents shall conform to the specifications of the Committee on Analytical Reagents of the American Chemical Society, where such specifications are available.[4] Other grades may be used, provided it is first ascertained that the reagent is of sufficiently high purity to permit its use without lessening the accuracy of the determination.

4.2 *Purity of Water*—Unless otherwise indicated, references to water shall be understood to mean distilled water or water of equal purity.

5. Concentration of Reagents

5.1 *Concentrated Acids and Ammonium Hydroxide*—When acids and ammonium hydroxide are specified by name or chemical formula only, it is understood that concentrated reagents of the following densities or concentrations are intended:

	Density, Mg/m^3
Acetic acid, $HC_2H_3O_2$ (99.7 %)	1.05
Formic acid, HCOOH	1.22
Hydrochloric acid, HCl	1.19
Hydrofluoric acid, HF (49 %)	1.16
Nitric acid, HNO_3	1.42
Phosphoric acid, H_3PO_4 (85 %)	1.70
Sulfuric acid, H_2SO_4	1.84
Ammonium hydroxide, NH_4OH	0.90

The desired densities or concentrations of all other concentrated acids are stated whenever they are specified.

5.2 *Diluted Acids and Ammonium Hydroxide*—Concentrations of diluted acids and ammonium hydroxide, except when standardized, are specified as a ratio stating the number of volumes of the concentrated reagent to be added to a given number of volumes of water, as in the following example: HCl (1 + 9) means 1 volume of concentrated HCl (density 1.19) mixed with 9 volumes of water. Acids shall be added to water slowly, with stirring.

5.3 *Standard Solutions*—Concentrations of standard solutions are expressed as normalities or as volume of solution that reacts with or contains a given mass of material being used or determined, for example: 0.1 *N* $Na_2S_2O_3$ solution, or $CuSO_4$ solution (1 cm^3 = 0.001 g Cu).

5.4 *Nonstandardized Solutions*—Concentrations of nonstandardized solutions prepared by dissolving a given mass in a solvent are specified in grams of the reagent (as weighted out)/dm^3 of solution, and it is understood that water is the solvent unless otherwise specified, for example: NaOH (10 g/dm^3) means 10 g of NaOH dissolved in water and diluted with water to 1 dm^3 (Note 1). In the case of certain reagents the concentration may be specified as a percentage by mass, for example: ethanol (50 %) means a solution containing 50 g of ethanol per 100 g of solution. Other nonstandardized solutions may be specified by name only, and the concentration of such solutions will be governed by the instructions for their preparation.

NOTE 1—Whenever a hydrated salt is used in the preparation of a reagent (for example, $BaCl_2 \cdot 2H_2O$) the preparation of the reagent is described in detail. When an anhydrous salt is used in preparing a simple aqueous solution the reagent is listed by title only and details of the preparation are not given.

[4] *Reagent Chemicals, American Chemical Society Specifications*, American Chemical Society, Washington, DC. For suggestions on the testing of reagents not listed by the American Chemical Society, see *Analar Standards for Laboratory Chemicals*, BDH Ltd., Poole, Dorset, U.K., and the *United States Pharmacopeia and National Formulary*, U.S. Pharmaceutical Convention, Inc. (USPC), Rockville, MD.

PART A. GENERAL TEST METHODS

6. Scope and Application

6.1 The general test methods described cover the analysis of many types of rubber products to determine the amount and type of nonrubber constituents and to calculate indirectly from these data the amount of rubber constituent.

6.2 The applications and limitations of the test methods to analysis of specific types of rubber products are given in the scopes of the various test methods. Application to types of rubber products not specified in the scope of a particular test method shall be verified by application to a control of known and similar composition.

6.3 Special test methods for analysis are given for rubber products containing glue, free carbon, antimony, lead, mineral oil, waxy hydrocarbons, and barium carbonate.

6.4 For the determination of the amount of a rubber polymer present in a rubber product, an indirect test method is given by which the nonrubber constituents are determined individually or in groups, and the rubber polymer content is determined by difference (Sections 11-13). If, in using this test method, fillers are determined by the ashing test method (Section 35 or 36), satisfactory results will be obtained, except where there are found to be present decomposable compounding ingredients such as carbonates that decompose at 550°C, clay, asbestine, talc, hydrated silica, antimony sulfide, halogen-containing components, and silicone polymers. No test method of filler determination herein described will give accurate results in the presence of clay, silica, talc, or any other hydrated filler unless a correction can be made for losses of water of hydration on ashing. This correction can be made only if the nature and quantity of these fillers are known. The indirect test method will not give accurate results in the presence of halogen-containing components or silicone rubber. In the presence of antimony sulfide or carbonates decomposing at 550°C, but in the absence of the above interfering constituents, approximate

AVA Documents Document Sharing Hub

Full document details: ASTM D297-93(2006)

correction can be made by means of determination of total antimony (Section 50) or of the metal associated with the decomposable carbonate (usually calcium, Section 45) or (Section 49) and calculation of the original composition of the compounding ingredient from these data.

6.5 If factice or high percentages of mineral rubber are present, no accurate test method is known for determination of rubber content or for complete analysis of the rubber product.

6.6 For the determination of the rubber content of hard rubber products, no accurate test method is described herein if fillers decomposable at 550°C are present.

7. Blank Determinations

7.1 Blanks shall be run on all determinations to check the purity of the materials used and deductions shall be made accordingly.

8. Check Analyses

8.1 Duplicate determinations shall be made and shall check within the limits specified in the test method, when these are stated.

9. Preparation of Samples

9.1 Before preparing a sample for analysis, the analyst shall, by inspection, assure himself that it has not been contaminated. The sample to be analyzed shall be selected by taking pieces from various parts of the original sample and separating them from foreign matter. Because of the variety of rubber products to which this test method can be applied, no single procedure for reducing the sample to the required fineness is applicable to all samples. Therefore, several alternative procedures for this purpose are described in 9.2 to 9.7. The analyst is expected to select the one most suitable to the sample that he is analyzing and the equipment available.

9.2 For vulcanized soft rubber, unvulcanized rubber, crude rubber, and many samples of reclaimed rubber, it is preferable to mix the sample and grind it by passing it two or three times through a clean, cold, laboratory rubber mill. The rubber will come from the mill in the form of a coarse powder or a rough sheet. If the product is in the form of a sheet, the adjustment of the mill shall be such that the thickness of the final sheet is no greater than 0.5 mm. If the sample is sticky, it shall be rolled in a liner material that will not adhere to or contaminate the sample. If the milled sample is a powder, it shall be transferred to a No. 14 (1.40-mm) sieve[5] and rubbed through the sieve. Grinding shall be continued until the entire sample passes through the sieve.

9.3 In the absence of milling machinery, the sample may be prepared by cutting it with scissors so that it will pass a No. 14 (1.40-mm) sieve.[6,7] The sample may be cut into long strips that are fine enough to pass freely through the sieve and the strips fed through by hand, or the sample may be cut into small fragments and shaken through the sieve. The cutting shall be continued until the entire sample passes through the sieve. If necessary, to prevent sticking, different fragments of the sieved sample may be segregated by wrapping in a liner material that will not adhere to or contaminate the sample.

9.4 Certain very glutinous samples may be prepared for extraction analysis as follows: Place a weighed 2-g sample of the material between two pieces of ashless filter paper that has been extracted in accordance with Section 21. The papers should be approximately 500 by 100 mm (20 by 4 in.) and the sample should be placed near one end. Flatten the sample and spread it throughout the length of the filter paper by passing the "sandwich" lengthwise, through a cold, closely set, even-speed rubber calender. The gross thickness of the resulting sheet should not be greater than 1.0 mm. If a rubber calender is not available, a similar sheet may be obtained by placing the sample in a hydraulic press or a vise. In the latter case, the sample may be roughly spread by hand throughout the length of the filter paper and pressure applied to small areas at a time until the whole sample has been flattened.

9.5 Samples of rubberized cloth, whose overall thickness is no greater than 1.0 mm, may be prepared for analysis by cutting them into pieces 1.5 mm square and then mixing well. If the fabric is easily removed, it should be separated, unless an analysis of the whole cloth is desired.

9.6 Samples of rubber cements shall be evaporated to dryness in a vacuum oven at a temperature not higher than 30°C. The residue may then be analyzed as an unvulcanized sample. A separate sample of the cement shall be distilled under reduced pressure if examination of the solvent is desired.

9.7 Samples of hard rubber shall be reduced to powder form by filing, cleaned with a magnet, and sieved through a No. 30 (600-µm) sieve.[6] Residue retained on this sieve shall be reduced until the entire sample passes through the sieve.

10. Preliminary Examination of Samples

10.1 The procedures given in 10.1.1-10.1.9 are for use in determining the number and kind of tests that should be conducted to obtain the desired information concerning the rubber product.

10.1.1 *Carbonates*—Drop a small piece of sample into a test tube containing HCl saturated with bromine. If a stream of bubbles is given off, carbonates are present. The test is not applicable to IIR products.

10.1.2 *Antimony and Lead*—Ash a 0.2 to 0.3-g specimen in accordance with 35.4 or 36.4. Dissolve the ash in 10 cm^3 of HCl by heating. Dilute to about 40 cm^3 and decant or filter the solution from the residue. Pass H_2S into the solution. If a red-orange precipitate forms, antimony is present and may be determined on a rubber specimen in accordance with Section 50. Organic sulfur shall be determined in accordance with 27.3. Dilute with water to about 400 cm^3 and again pass in H_2S. If a black precipitate appears, lead is present and organic and inorganic sulfur shall be determined in accordance with 28.3 and 28.4.

[5] Detailed requirements for these sieves are given in Specification E11.

[6] The sole source of supply of compressed volume densimeters known to the committee at this time is C. W. Brabender Instruments, Inc., 50 E. Wesley St., South Hackensack, NJ 07606.

[7] If you are aware of alternative suppliers, please provide this information to ASTM International Headquarters. Your comments will receive careful consideration at a meeting of the responsible technical committee,[1] which you may attend.

AVA Documents
Document Sharing Hub

Full document details: ASTM D297-93(2006)

10.1.3 *Carbon Black*—Heat a portion of the sample with HNO_3 until there is no more frothing. If the liquid is black, it indicates the presence of carbon black. The test is not applicable to IIR products.

10.1.4 *Barium Salts*—If the sample contains carbonate, ash a small specimen, digest the ash in dilute HCl, cool, and filter. Add a few drops of dilute H_2SO_4 to the filtrate. A white precipitate, insoluble in excess HCl, indicates the presence of acid-soluble barium salts. The presence of acid-soluble barium salts requires that organic sulfur shall be determined by the fusion method (Section 32).

10.1.5 *Waxy Hydrocarbons*—If waxy hydrocarbons are present, they will solidify at −5°C in the acetone extract as a white flocculent precipitate clinging to the sides of the flask.

10.1.6 *Glue*—Extract a portion of the sample with a mixture of 32 % acetone and 68 % chloroform by volume for 8 h in accordance with Section 21. Dry the specimen and digest for 1 h with hot water. Filter, cool, and add a few drops of a freshly prepared solution of tannic acid (20 g/dm^3) to the filtrate and allow to stand for a few minutes. If the solution becomes turbid, glue is present and should be determined as described in Section 40.

10.1.7 *Factice*—Digest the rubber remaining from the test for glue with NaOH solution (175 g/dm^3). Decant the liquid, dilute, and acidify with HCl. Any cloudiness or precipitate indicates the presence of factice and the alcoholic potash extract (Section 22) shall be determined.

10.1.8 *Other Fillers*—An HCl-soluble ash indicates the absence of clay, silica, silicates, titanium dioxide, barium sulfate, and lithopone. An HCl-insoluble ash indicates the need for a complete ash analysis if composition of the ash is required.

10.1.9 *Rubber Polymer Identification*—If an identification of the type of rubber polymer present in the sample is desired, proceed in accordance with Sections 52-58.

RUBBER POLYMER CONTENT BY THE INDIRECT TEST METHOD

11. Scope

11.1 The rubber content of a product is calculated by subtracting the sum of the nonrubber constituents from 100 %. This test method is applicable to NR, IR, SBR, and BR products. It can also be applied to IIR products if they are extracted with methyl ethyl ketone rather than with acetone.

12. Terminology

12.1 *Definitions:*

12.1.1 *rubber as compounded*—approximately equivalent to the nonextended rubber used in the manufacture of a rubber product. It differs from the rubber polymer by the amount of nonrubber material present in the crude rubber. For synthetic rubbers the quantity varies with the type of rubber and the manufacturer and no definite percentage can be given. Therefore, for synthetic rubber, rubber as compounded shall be considered to be equal to rubber polymer except for SBR (see Table 1).

12.1.2 *rubber by volume*—is the percentage by volume of a rubber product occupied by the rubber as compounded.

TABLE 1 Factors for Calculations

Rubber	*A*	*D*	Density Mg/m^3
NR	94/97	0.94	0.91[A]
IR	1.00	1.00	0.95[B]
SBR[C]	1.00	0.92	0.94[B]
BR	1.00	1.00	0.90[B]
IIR	1.00	1.00	0.92[B]

[A] Wood, L. A., "Values of Physical Constants of Rubber," *Rubber Chemistry and Technology*, Vol. 12, 1939, p. 130.
[B] Wake, W. C., "The Analysis of Rubber and Rubber-Like Polymers," MacLaren and Sons, Ltd., London, England, 1958, pp. 42 to 45.
[C] Containing 23.5 % bound styrene and not oil-extended.

12.1.3 *rubber polymer*—the characteristic and major component of a natural or synthetic crude rubber.

12.1.4 *rubber polymer by volume*—the percentage by volume of a rubber product occupied by the rubber polymer.

13. Calculation

13.1 Calculate the percentages of rubber as follows:

$$\text{Rubber polymer, } \% = A(100 - B) \quad (1)$$

$$\text{Rubber as compounded, } \% = C/D \quad (2)$$

$$\text{Rubber polymer by volume, } \% = CE/F \quad (3)$$

$$\text{Rubber by volume, } \% = GE/F \quad (4)$$

where:

A = factor listed in Table 1,
B = sum of percentages of total extract, alcoholic potash extract, combined sulfur, inorganic fillers, carbon black and glue as determined in accordance with Sections 21 (or 19 and 20), 22, 28.2.1, 34.1, 38 (Test Method A) or 39 (Test Method B), and 40.
C = rubber polymer, %
D = factor listed in Table 1,
E = density of product as determined in 16.1,
F = density of rubber listed in Table 1, and
G = rubber as compounded, %

DETERMINATIONS AND REPORT FOR GENERAL TEST METHOD

14. Determinations Required

14.1 A complete analysis of a rubber product for the purpose of determining its quality and its specific composition requires, in addition to rubber polymer content, the determination of other values listed in 14.1.1-14.1.5.

14.1.1 *Acetone Extract, Based on Rubber as Compounded*—Calculate the percentage of acetone extract, based on rubber as compounded, as follows:

$$\text{acetone extract, based on rubber as compounded, } \% = (A/B) \times 100 \quad (5)$$

where:

A = percentage of acetone extract, and
B = percentage of rubber as compounded.

14.1.2 *Sulfur Based on Rubber as Compounded*—Calculate the percentage of sulfur, based on rubber as compounded, as follows:

AVA Documents
Document Sharing Hub

Full document details: ASTM D297-93(2006)

$$\text{Sulfur, based on rubber as compounded, \%} = (A/B) \times 100 \quad (6)$$

where:

A = percentage of total sulfur, and
B = percentage of rubber as compounded.

14.1.3 *Inorganic Fillers*—The inorganic fillers may be determined as a unit or may be determined individually and reported as in Items (*18*) to (*28*) of 15.1.

14.1.4 *Combustible Fillers*—Carbon black and glue are the combustible fillers which may be determined individually.

14.1.5 *Additives*—Additives such as factice, other rubber substitutes, and softeners are not accurately determined. Their presence and an estimate of the quantities present may be found by determination of acetone, chloroform and alcoholic potash extracts, unsaponifiable matter, waxy hydrocarbons, and mineral oil, and these values shall be reported in a complete analysis.

15. Report

15.1 The report may include any or all of the following Items (*1*) to (*17*) if a detailed filler analysis is not desired; the purpose of the analysis shall determine the nature of the report. The report may also include any or all of the following Items (*18*) to (*28*) if a detailed analysis of inorganic filler is desired.

	Percentage of	Determined by Section
(*1*)	Acetone extract, corrected	18.1 and 19
(*2*)	Waxy hydrocarbons	24
(*3*)	Mineral oil	25
(*4*)	Chloroform extract	18
(*5*)	Free sulfur	29
(*6*)	Combined sulfur	28.2.1
(*7*)	Total sulfur	28.2.4
(*8*)	Fillers, inorganic	34.1
(*9*)	Carbon black	38 or 39
(*10*)	Glue	40
(*11*)	Rubber polymer	11-13 or 52-58
(*12*)	Rubber polymer by volume	11-13
(*13*)	Rubber as compounded, natural or synthetic	11-13
(*14*)	Rubber by volume, natural or synthetic	11-13
(*15*)	Percentage of acetone extract on rubber as compounded	14.1.1
(*16*)	Percentage of sulfur on rubber as compounded	14.1.2
(*17*)	Density	16
(*18*)	Silicon dioxide and insoluble matter	42
(*19*)	Silicon dioxide	42
(*20*)	Lead oxide	43
(*21*)	Iron and aluminum oxides	44
(*22*)	Calcium oxide	45
(*23*)	Magnesium oxide	46
(*24*)	Zinc oxide	47
(*25*)	Barium carbonate	49
(*26*)	Barium sulfate	48
(*27*)	Antimony sulfide	50
(*28*)	Titanium dioxide	51

DENSITY

16. Density

16.1 Determine the density by use of a pycnometer, by hydrostatic weighings, or by compressed volume densimeter. Take measurements at a temperature between 24.5° and 25.5°C, unless the coefficient of expansion of the rubber product is known, in which case make the determination at any convenient temperature and correct to 25°C.

16.2 *Pycnometer Method:*

16.2.1 *Procedure*—Determine the density using the pycnometer with alcohol in place of water to eliminate errors due to air bubbles.

16.2.2 *Calculation*—Calculate the density as follows:

$$\text{Density at 25°C in Mg/m}^3 = \frac{0.9971 \times A}{A - (B - C)} \times D \quad (7)$$

where:

A = mass of specimen, g,
B = mass of pycnometer filled with specimen and alcohol, g,
C = mass of pycnometer filled with alcohol, g, and
D = density of alcohol (25°C), Mg/m^3 (gm/cc).

16.3 *Hydrostatic Method:*

16.3.1 *Procedure*—Weigh the specimen first in air and then suspend in water. Dipping of the specimen in alcohol followed by blotting before suspending in water for weighing will aid in the elimination of bubbles that cause errors in the determination. A very fine wire is recommended as a supporting medium.

16.3.2 *Calculation*—Calculate the density as follows:

$$\text{Density at 25°C in Mg/m}^3 = \frac{0.9971 \times A}{A - (B - C)} \quad (8)$$

where:

A = mass of specimen, g,
B = mass of specimen and supporting wire in water, g, and
C = mass of supporting wire in water, g.

16.4 *Compressed Volume Densimeter:*

16.4.1 *Scope*—This test method describes the use of a volume compressing densimeter which operates on a "Sample Mass versus Compressed Sample Volume" ratio as a means of determining the density of rubbery materials such as raw rubbers, carbon black masterbatches, or vulcanizable finished compounds in the uncured state.

16.4.2 *Terminology:*

16.4.2.1 *compressed volume*—The final equilibrium volume attained by an unvulcanized rubber sample when it is subjected to a compressive force sufficient to cause it to flow until it fully conforms to the surrounding shape of the piston-cylinder test chamber enclosure.

16.4.2.2 *density*—The ratio of sample mass to the final compressed volume.

16.4.3 *Summary of Test Method*—The mass of a test specimen of unvulcanized rubber or rubber compound is determined to 0.01 g. The lid of the test chamber is removed, the sample inserted, and the lid replaced and securely fastened. Sufficient compressive force is applied to the test chamber (by means of air pressure exerted on the inlet side of the drive piston), to cause the sample to flow until it reaches its final compressed volume. From the sample mass and its final compressed volume the density may be calculated.

16.4.4 *Significance and Use*—This test method may be used for quality control in rubber product manufacturing operations, for research and development testing of raw rubbers, and for

AVA Documents
Document Sharing Hub

Full document details: ASTM D297-93(2006)

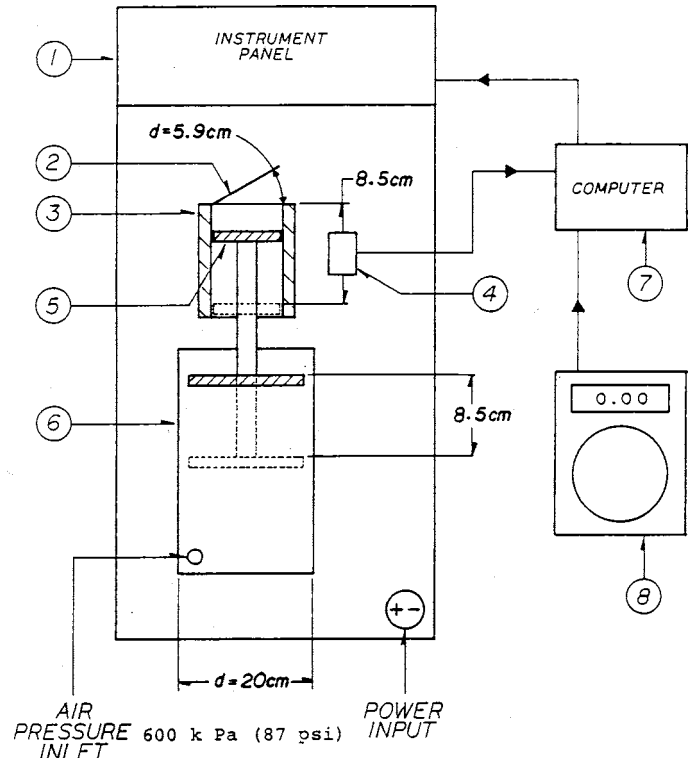

1 = Keyboard, Printerfy
2 = Removable Lid to Test Cylinder
3 = Test Cylinder
4 = Displacement Transducer
5 = Test Piston
6 = Drive Piston/Cylinder
7 = Computer (input from balance & displacement transducer)
8 = Electronic Balance

FIG. 1 Compressed Volume Densimeter

evaluating the effects of additives to a rubber compound—particularly the carbon black level in rubber masterbatches.

16.4.5 *Apparatus:*

16.4.5.1 *Compressed Volume Densimeter,*[6](see Fig. 1), consists of an air operated piston-cylinder test chamber whose dimensions (cross sectional area and cylinder length) are accurately known. In the empty state, the top surface of the test piston forms the bottom of the test chamber. As air pressure is applied to the inlet side of the drive cylinder, the test piston will move upwards decreasing the available volume in the test chamber. Measurement of the test piston travel via a linear displacement transducer allows an evaluation of both the calibrated empty volume of the test chamber and the volume remaining when a rubber sample is enclosed and compressed to its final volume. The top of the test chamber is removable for sample insertion but upon replacing it into position it must be securely fastened as per the manufacturer's instructions prior to starting the test.

16.4.5.2 For measuring sample mass, a balance whose output is electronically transferable to the computer memory of the compressed volume densimeter is preferred. In the absence of this feature, a suitable balance may be used with a capacity of at least 310 ± 0.01 g.

16.4.5.3 A means of storing and displaying the sample mass (g ±0.01) and the test piston displacement in cm^3 (±0.001) is convenient for rapid calculation of density, but in the absence of these features these values can be independently measured and calculated.

16.4.6 *Sample Preparation:*

16.4.6.1 A sample is cut from either a bale of raw rubber or from a milled sheet of masterbatch or from an unvulcanized rubber compound. A sample volume of 40 to 120 cc may be used, with a sample size of approximately 100 cc recommended for best repeatability.

16.4.6.2 Unless otherwise specified, the standard temperature for testing shall be in accordance with 16.1 (that is, 25 ± 0.5°C).

16.4.7 *Procedure:*

16.4.7.1 Turn on the electric power supply, and adjust the compressed air supply to the drive piston to 600 kPa (87 psi) (see Fig. 1 and Note 2 and Note 3).

NOTE 2—600 kPa (87 psi) on the drive piston of the compressed volume densimeter in Fig. 1 results in a compressive force of 18.9 kN being applied to a sample in the test chamber or 7389 kPa (1072 psi). If the dimensions of the compressed volume densimeter used differ from those shown in Fig. 1 the air supply shall be adjusted to exert the same levels of force and pressure to the sample area.

NOTE 3—No minimum pressure on the sample is specified. For low viscosity samples which have a measured ML-4 at 100 ± 0.5°C of <40.0 (see Test Methods D1646), the use of 600 kPa pressure on the drive piston may cause some sample loss due to leakage through the clearance between the test chamber cap and the cylinder wall. If this happens, it is recommended that the drive piston air supply be reduced to that level which will achieve adequate compression to fill the test chamber without leakage.

16.4.7.2 Zero the electronic balance and check its accuracy with the standard mass supplied by the manufacturer.

16.4.7.3 Check the accuracy of the displacement transducer with the standard metal cylinder of known mass, height, and diameter as per the manufacturer's instructions.

16.4.7.4 Measure the mass of the sample to ±0.01 g.

16.4.7.5 Remove the lid to the test chamber, insert the sample, replace the lid, and lock it securely before pressurizing.

16.4.7.6 Activate the air supply to the drive cylinder and adjust to 600 kPa (87 psi) (with a corresponding pressure on the sample of 7389 kPa (1072 psi)). Allow the sample to remain under compression until equilibrium volume is reached as indicated by two or more identical readings in succession of the output from the linear displacement transducer. Note the total piston displacement value in centimeter ±0.001.

16.4.8 *Calculation:*

16.4.8.1 Calculate the sample's compressed volume as follows:

$$Vs = k \times D^2 \times L \tag{9}$$

where:

Vs = compressed volume, cm^3,
D = test cylinder diameter, cm,
L = thickness of compressed sample, cm, and
k = 0.0784.

16.4.8.2 Calculate the sample density as follows:

$$D,\ Mg/m^3 = \frac{Wo}{Vs} \tag{10}$$

AVA Documents
Document Sharing Hub

Full document details: ASTM D297-93(2006)

TABLE 2 Compressed Volume Density, Type 1—Precision[A]

NOTE 1—Measured Property = Density, Mg/m^3.

Material	Average	Within Laboratories			Between Laboratories		
		Sr	*r*	(*r*)	*SR*	*R*	(*R*)
A (SBR1500)	0.944	0.00078	0.00217	0.23	0.00117	0.00328	0.35
B (SBR1712)	0.954	0.00100	0.00280	0.29	0.00148	0.00413	0.43
C (SBR1848)	1.134	0.00071	0.00198	0.17	0.00194	0.00542	0.48
Pooled (average)	1.011	0.00084	0.0024	0.23	0.00156	0.00440	0.44

[A] The time period for precision is days.

where:

D = compressed density (see Note 4),
Wo = sample mass, g, and
Vs = sample volume, cm^3.

NOTE 4—Mg/m^3 is numerically equal to gm/cm^3.

16.4.9 Report the following information:

16.4.9.1 Date of test,

16.4.9.2 Sample identification,

16.4.9.3 Test temperature,

16.4.9.4 Type of compressed volume densimeter, include critical dimensions if different from those of Fig. 1, and

16.4.9.5 Results calculated in accordance with Eq 9 and Eq 10.

16.4.10 *Precision and Bias:*[8]

16.4.10.1 These precision statements have been prepared in accordance with Practice D4483. Refer to Practice D4483 for terminology and other statistical calculation details.

16.4.10.2 The results presented in Table 2 give an estimate of the precision of this test method with the SBR rubbers used in the interlaboratory program described below. These precision parameters should not be used for acceptance or rejection testing of materials without documentation that they are applicable to those particular materials and the specific testing protocols that include this test method.

(*1*) Type 1 interlaboratory precision program was conducted. A period of 24 h separates replicate test results. Five laboratories participated and three SBR rubbers were used. A test result is the value obtained from the average of three determinations. Each material was analyzed in triplicate on two separate days.

16.4.10.3 Precision parameters are given in Table 2.

16.4.10.4 The difference between two single test results (or determinations) found on identical test material under the repeatability conditions prescribed for a particular test will exceed the repeatability on an average of not more than once in 20 cases in the normal and correct operation of the test method.

16.4.10.5 The difference between two single independent test results found by two operators working under the prescribed reproducibility conditions in different laboratories on identical test material will exceed the reproducibility on an average of not more than once in 20 cases in the normal and correct operation of the test method.

16.4.11 *Keywords:*

16.4.11.1 compressed volume; densimeter; density; mass; mass/volume ratio

[8] Supporting data have been filed at ASTM International Headquarters and may be obtained by requesting Research Report RR:D11-1061.

EXTRACT ANALYSIS

17. Scope

17.1 The test methods described in Sections 18-26 cover the removal from a rubber product of all nonrubber constituents soluble in specified organic solvents.

18. Terminology

18.1 *Definitions of Terms Specific to This Standard:*

18.1.1 *acetone extract*—If the acetone extract is made on vulcanized rubber products the acetone removes rubber resins, free sulfur, acetone-soluble plasticizers, processing aids, mineral oils or waxes, acetone-soluble antioxidants and organic accelerators or their decomposition products, and fatty acids. It also removes part of bituminous substances, vulcanized oils, high molecular mass hydrocarbons, and soaps. This is generally called acetone extract. The percentages of free sulfur, waxy hydrocarbons, and mineral oil are determined and their sum deducted from the acetone extract. The value obtained is known as acetone extract, corrected. The corrected figure thus obtained will at times give valuable information regarding the quality of the rubber present. This is not true, however, when the product contains substantial quantities of mineral oils or waxes, bituminous substances, organic accelerators, or antioxidants. With products containing rubber that consists of only the best grades of Hevea rubber, the acetone extract should not exceed 5 % of the rubber present. A higher extract may indicate the presence of inferior or reclaimed rubbers, added oils, waxes, or bituminous materials, or substantial quantities of organic accelerators or antioxidants. No correction is possible for small quantities of antioxidants and organic accelerators, since no general method is now known for the separation and identification of all classes of these materials. Practice D3156 may be used for the qualitative detection of antidegradants in the acetone extract of vulcanized rubber products. Acetone extract shall be taken as the percentage of acetone extract minus the percentage of sulfur as determined on the acetone extract by Section 30. Acetone extract shall be determined in accordance with Section 19.

18.1.2 *alcohol potash extract*—The purpose of the alcoholic potash extraction is to detect the presence of rubber substitutes. The alcoholic potash extract shall be determined in accordance with Section 22.

18.1.3 *chloroform extract*—The chloroform extraction removes a portion of the bituminous substances and serves as an indication of their presence. The chloroform extract may also include other materials, including small portions of resins or

AVA Documents Document Sharing Hub

Full document details: ASTM D297-93(2006)

which no correction is made. The chloroform extract shall be determined in accordance with Section 20.

18.1.4 *mineral oil*—Mineral oil in the rubber product is the portion of the unsaponifiable acetone extract that is soluble in absolute ethanol at −5°C and that is soluble in carbon tetrachloride and is not attacked by concentrated H_2SO_4. Mineral oil shall be determined in accordance with Section 25.

18.1.5 *rapid reflux extracts:*—

18.1.5.1 *bound extract*—Bound extract consists of materials removed from vulcanized rubber products by methyl ethyl ketone in rapid reflux extraction but not removed by acetone in rapid reflux extraction. It includes part of any bituminous substances, vulcanized oils, high-molecular weight hydrocarbons, and soaps not chemically combined with the rubber. It shall be determined in accordance with Section 26.

18.1.5.2 *complete extract*—Rapid reflux extraction of vulcanized rubber products with methyl ethyl ketone removes all of the solvent-soluble organic materials not chemically combined with the rubber. It includes rubber resins, free sulfur, plasticizers, processing aids, antioxidants and organic accelerators or their decomposition products, bituminous substances, fatty acids, soaps, and part of any vulcanized oils. It shall be determined in accordance with Section 26

18.1.5.3 *free extract*—Rapid reflux extraction of vulcanized rubber products with acetone removes most of the solvent-soluble organic materials not chemically combined with the rubber. It includes rubber resins, free sulfur, plasticizers, processing aids, antioxidants and organic accelerators or their decomposition products, and fatty acids, but only part of bituminous substances, vulcanized oils, high-molecular-weight hydrocarbons, and soaps. It shall be determined in accordance with Section 26.

18.1.6 *total extract*—The total extract is the material removed from the rubber product, by extraction with a mixture consisting of 32 % acetone and 68 % chloroform by volume, for a period of at least 8 h. It is also approximately equal to the sum of the acetone and chloroform extracts. The total extract shall be determined in accordance with Section 21.

18.1.7 *unsaponifiable acetone extract*—The unsaponifiable acetone extract is the portion of the acetone extract that is not saponified by a 1 *N* alcoholic KOH solution. It shall be determined in accordance with Section 23.

18.1.8 *waxy hydrocarbons*—The waxy hydrocarbons are the portion of the unsaponifiable acetone extract that is removed by extraction with absolute ethanol and that separates from the alcoholic solution on cooling to −5°C with a mixture of salt and ice. Waxy hydrocarbons shall be determined in accordance with Section 24.

19. Acetone Extract

19.1 *Scope*—This test method covers the determination of the percentage of acetone extract (see 18.1). This test method is also applicable when any of the following quantities are to be determined: unsaponifiable acetone extract (Section 23), waxy hydrocarbons (Section 24), mineral oil (Section 25), sulfur in acetone extract (Section 30), and in any procedure where an acetone-extracted specimen is required. It is applicable to

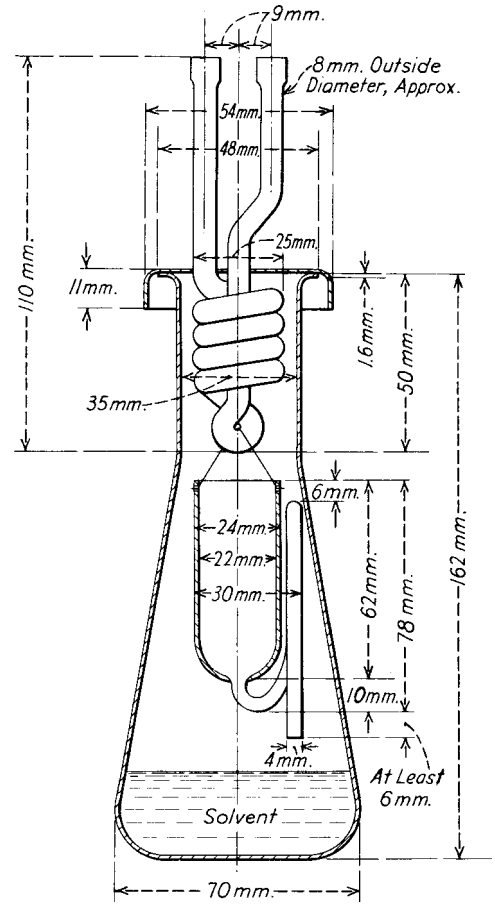

FIG. 2 Extraction Apparatus with Block Tin Condenser

crude, unvulcanized, reclaimed, or vulcanized NR, SBR, BR, and IR types of rubber products.

19.2 *Extraction Apparatus:*

19.2.1 The extraction apparatus used shall be of the general type and dimensions shown in Fig. 2 or Fig. 3.

19.2.2 The apparatus in Fig. 2 shall consist of a glass conical flask, glass extraction cup, and block tin condenser. The apparatus in Fig. 3 shall be all glass.

19.3 *Solvent: Acetone*—USP grade acetone may be used if distilled over anhydrous potassium carbonate (K_2CO_3) not more than 10 days before use. Use the fraction boiling between 56 and 57°C.

19.4 *Procedure:*

19.4.1 Place a weighed specimen of approximately 2 g in a filter paper. If the specimen is in the form of a sheet (see 9.2), cut it with scissors into strips 3 to 5 mm in width. If the specimen becomes tacky during the extraction, take care that adjacent portions are separated by paper. Fold the paper so that it will fit in the extraction cup and suspend the cup in a weighed extraction flask containing 50 to 75 cm^3 of acetone. (Prior to the weighing of the extraction flask, it shall have been dried for 2 h at 70 ± 5°C and cooled in a desiccator to the temperature of the balance.)

19.4.2 Extract the specimen continuously for 16 h heating at a rate such that the time required to fill and empty the siphon cup will be between 2.5 and 3.5 min. (Rubber products having

AVA Documents
Document Sharing Hub

Full document details: ASTM D297-93(2006)

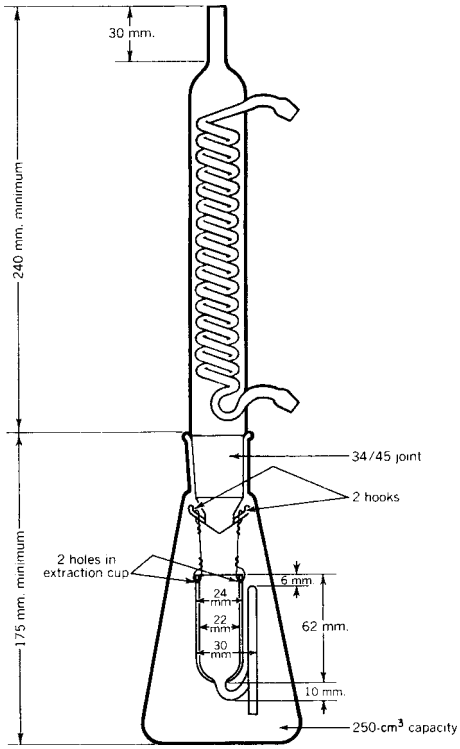

FIG. 3 Extraction Apparatus with Glass Condenser

a ratio of total sulfur to rubber polymer in excess of 10 %, shall be extracted for 72 h.) Carefully note all characteristics of the extract, when hot and cold.

19.4.3 Evaporate off the acetone over a steam bath, using a gentle current of filtered air to prevent boiling. Remove the flask from the steam bath just prior to the disappearance of the last traces of solvent to prevent loss of extract. Continue the passage of air through the flask for 10 min to remove the remaining solvent and dry the flask for 2 h at 70 ± 5°C in an air bath.

19.4.4 Cool in a desiccator to the temperature of the balance and weigh.

19.5 *Calculation*—Calculate the percentage of acetone extract as follows:

$$\text{Acetone extract, } \% = (A/B) \times 100 \qquad (11)$$

where:

A = grams of extract, and
B = grams of specimen used.

20. Chloroform Extract

20.1 *Scope*—This test method covers the determination of the amount of material removed from a vulcanized rubber product by extraction with chloroform after the specimen has been extracted with acetone (see 18.2). Its application is restricted to vulcanized NR, SBR, BR and IR types of rubber products.

20.2 *Apparatus*—The extraction apparatus shall be that described in 19.2.

20.3 *Solvent: Chloroform*—Chloroform of USP grade may be used in extraction.

20.4 *Procedure:*

20.4.1 Suspend the extraction cup containing the specimen that has been extracted with acetone (19.4) in a second weighed extraction flask containing 50 to 75 cm^3 of chloroform and extract it for 4 h with the chloroform, using the extraction rate prescribed in 19.4. (Rubber products having a ratio of total sulfur to rubber polymer in excess of 10 % shall be extracted for 24 h.) Record the color of the chloroform solution.

20.4.2 Evaporate the chloroform over a steam bath, using a gentle current of filtered air to prevent boiling. Remove the flask from the steam bath just prior to the disappearance of the last traces of solvent to prevent loss of extract. Continue the passage of air for 10 min to remove the remaining solvent and dry the flask for 2 h in an air bath at 70 ± 5°C.

20.4.3 Cool in a desiccator to the temperature of the balance and weigh. Reserve the extracted sample for extraction with alcoholic potash (Section 22).

20.5 *Calculation*—Calculate the percentage of chloroform extract as follows:

$$\text{Chloroform extract, } \% = (A/B) \times 100 \qquad (12)$$

where:

A = grams of extract, and
B = grams of specimen used.

21. Total Extract

21.1 *Scope*—The total extract (see 18.3) may be used to replace the sum of the acetone and chloroform extracts when analysis is to be performed on an extracted specimen or when rubber polymer is being determined in accordance with 13.1. Its application is restricted to vulcanized NR, SBR, BR, and IR types of rubber products.

21.2 *Apparatus*—The extraction apparatus shall be that described in 19.2.

21.3 *Reagents:*

21.3.1 *Acetone*—See 19.3.

21.3.2 *Chloroform*—See 20.3.

21.4 *Procedure:*

21.4.1 Place a weighed specimen of approximately 2 g in a filter paper. If the specimen is in the form of a sheet, cut it with scissors into strips 3 to 5 mm in width. If the specimen becomes tacky during the extraction, take care that adjacent portions are separated by paper. Fold the paper so that it will fit in the extraction cup, and suspend the cup in a weighed extraction flask containing 50 to 75 cm^3 of a mixture consisting of 32 parts of acetone and 68 parts of chloroform by volume. Use care in disposing of excess solvent mixture. Acetone plus chloroform can react with bases to form explosive mixtures. (Prior to the weighing of the extraction flask, dry it for 2 h at 70 ± 5°C and cool in a desiccator to the temperature of the balance.)

21.4.2 Extract the specimen continuously for 16 h heating at a rate such that the time required to fill and empty the siphon cup will be between 2.5 and 3.5 min. (Rubber products having a ratio of total sulfur to rubber polymer in excess of 10 % shall be extracted for 72 h.) Carefully note all characteristics of the extract, when hot and cold. If the color is dark, make a

AVA Documents
Document Sharing Hub

Full document details: ASTM D297-93(2006)

chloroform extraction as described in Section 20 and add the value for the chloroform extract to the result obtained for total extract.

21.4.3 Evaporate off the solvent over a steam bath, using a gentle current of filtered air to prevent boiling. Remove the flask from the steam bath just prior to the disappearance of the last traces of solvent to prevent loss of extract. Continue the passage of air through the flask for 10 min to remove the remaining solvent and dry the flask for 2 h in a 70 ± 5°C air bath.

21.4.4 Cool in a desiccator to the temperature of the balance and weigh. Save the extracted rubber for further tests that require the use of an extracted specimen (see Sections 31, 32, 33, 38 and 52).

21.5 *Calculation*—Calculate the percentage of total extract as follows:

$$\text{Total extract, } \% = (A/B) \times 100 \quad (13)$$

where:

A = grams of extract, and
B = grams of specimen used.

22. Alcoholic Potash Extract

22.1 *Scope*—This test method covers the determination of the amount of material that can be removed by alcoholic KOH from a rubber product that previously has been extracted with acetone and chloroform (see 18.4). Its application is restricted to vulcanized NR, SBR, BR, and IR types of rubber products.

22.2 *Reagents:*

22.2.1 *Alcoholic Potash Solution*—Prepare a 1 *M* alcoholic potassium hydroxide (KOH) solution by dissolving the required amount of KOH in absolute ethanol that has been purified as follows: Dissolve 1.3 g of silver nitrate ($AgNO_3$) in 3 cm^3 of water and add it to 1 dm^3 of alcohol. Dissolve 3 g of KOH in the smallest amount of hot water possible, cool, add it to the $AgNO_3$ solution, and shake thoroughly. Allow the solution to stand for at least 24 h, filter, and distill.

NOTE 5—Absolute ethanol denatured with 10 % by volume of methanol, or anhydrous ethanol conforming to Formula No. 2B of the U. S. Bureau of Internal Revenue may be used in place of absolute ethanol.

22.2.2 *Congo Red Paper.*

22.2.3 *Ethanol* (95 %).

22.2.4 *Ether.*

22.3 *Procedure:*

22.3.1 Remove the specimen remaining after the chloroform extract (Section 20) or total extract (Section 21) from its wrapping material, while wet with solvent and dry the rubber at 70 ± 5°C to remove the solvent.

22.3.2 Transfer to a 200-cm^3 Erlenmeyer flask, add 50 cm^3 of alcoholic potash solution, and heat under a reflux condenser for 4 h. In the case of hard rubber, continue the heating for 16 h or more.

22.3.3 Filter into a 250-cm^3 beaker, wash with two 25-cm^3 portions of boiling alcohol and then with three 25-cm^3 portions of boiling water, and evaporate the filtrate just to dryness. Use about 75 cm^3 of water to transfer the dried filtrate residue to a separatory funnel. Acidify the solution with HCl (1 + 3), testing with Congo red paper.

22.3.4 Extract with four 25-cm^3 portions of ether, unless the fourth portion should be colored. In this case, continue the extraction until the ether extract is colorless. Unite the ether fractions and wash thoroughly with water until free of acid (two washings are generally sufficient).

22.3.5 Filter the ether solution through a plug of previously washed absorbent cotton into a weighed flask and wash the separatory funnel and the cotton plug with ether. Evaporate the ether on a steam bath, using a gentle current of filtered air to prevent boiling. Remove the flask from the steam bath just prior to the disappearance of the last traces of solvent and continue the passage of air for 10 min. Dry the flask at 100 ± 5°C to constant mass, cool, and weigh.

22.4 *Calculation*—Calculate the percentage of alcoholic potash extract as follows:

$$\text{Alcoholic potash extract, } \% = (A/B) \times 100 \quad (14)$$

where:

A = grams of extract, and
B = grams of specimen used.

23. Unsaponifiable Acetone Extract

23.1 *Scope*—This test method covers the determination of the amount of unsaponifiable material contained in the acetone-soluble portion of a rubber product (see 18.5).

23.2 *Reagents:*

23.2.1 *Alcoholic Potash Solution*—See 22.2.1.

23.2.2 *Ether.*

23.2.3 *Phenolphthalein Indicator Solution*—Dissolve 0.5 g of phenolphthalein in 100 cm^3 of ethanol.

23.3 *Procedure:*

23.3.1 Add to the acetone extract obtained from a 2-g specimen (see 19.4), 50 cm^3 of a 1 *N* alcoholic KOH solution, condenser for 2 h, remove the condenser, and evaporate to dryness.

23.3.2 Transfer to a separatory funnel, using about 100 cm^3 of water. Extract with 25 cm^3 of ether. Allow the layers to separate thoroughly; then draw off the water layer. Continue extraction of the water layer with fresh portions of ether, including washing out the original flask with a portion, until no more unsaponifiable matter is removed. This usually requires about four washings. Unite the ether layers and wash with water until a negative test for alkali using phenolphthalein indicator is obtained on the wash water.

23.3.3 Transfer the ether to a weighed flask and distill off the ether on a steam bath using a gentle stream of filtered air to prevent boiling. Continue the air stream for 5 min after the ether is distilled off. Dry the extract to constant mass at 100 ± 5°C and weigh. Save the residue for determination of waxy hydrocarbons (Section 24) and mineral oil (Section 25).

23.4 *Calculation*—Calculate the percentage of unsaponifiable acetone extract as follows:

$$\text{Unsaponifiable acetone extract, } \% = (A/B) \times 100 \quad (15)$$

where:

AVA Documents
Document Sharing Hub

Full document details: ASTM D297-93(2006)

A = grams of extract, and
B = grams of specimen used.

24. Waxy Hydrocarbons

24.1 *Scope*—This test method covers the determination of the amount of waxy hydrocarbons contained in the unsaponifiable acetone extract that are soluble in ethanol and that separate from an ethanol solution on cooling to −5°C.

24.2 *Reagents:*
24.2.1 *Chloroform*—See 20.3.
24.2.2 *Ethanol, Absolute.*
24.2.3 *Ethanol* (95 to 100%).

24.3 *Procedure:*
24.3.1 To the unsaponifiable matter, obtained from 23.3.3, add 50 cm^3 of absolute ethanol and heat on the steam bath for 30 min. Let the flask stand in a mixture of ice and salt kept at −5°C for at least 1 h. Filter off the separated waxy hydrocarbons on filter paper by applying gentle suction while keeping the filter funnel surrounded by a salt-ice mixture at −5°C or lower. Wash the precipitate with ethanol (95 to 100 %) that has been cooled to −5°C or lower in an ice-salt mixture. Save the filtrate and washings for determination of mineral oil (Section 25).
24.3.2 Dissolve the precipitate from the filter paper with hot chloroform, and catch the solution in a weighed 100 to 150-cm^3 beaker. Wash the flask with hot chloroform and add the washings to the solution in the beaker in order to include any insoluble matter adhering to the walls of the flask. Evaporate the solvent on a steam bath, passing a gentle current of filtered air over the residue for 5 min after the solvent is essentially evaporated. Dry to constant mass at 100 ± 5°C, cool, and weigh.

24.4 *Calculation*—Calculate the percentage of waxy hydrocarbons as follows:

$$\text{Waxy hydrocarbons, } \% = (A/B) \times 100 \quad (16)$$

where:
A = mass of waxy hydrocarbons, and
B = grams of specimen used.

25. Mineral Oil

25.1 *Scope*—This test method covers the determination of the amount of mineral oil that is extracted from a rubber product with acetone. The mineral oils found are saturated hydrocarbons that are soluble in ethanol at −5°C, are soluble in CCl_4, and are not attacked by concentrated H_2SO_4.

25.2 *Reagents:*
25.2.1 *Carbon Tetrachloride* (CCl_4).
25.2.2 *Ether.*
25.2.3 *Sulfuric Acid* (H_2SO_4).

25.3 *Procedure*—Evaporate the alcohol filtrate from the waxy hydrocarbon determination (24.2.1), using a gentle current of filtered air to prevent boiling, add 25 cm^3 of CCl_4, and transfer to a separatory funnel. Shake with H_2SO_4, drain off the colored acid, and repeat with fresh portions of H_2SO_4 until there is no longer any discoloration of the acid. After drawing off all of the H_2SO_4, add a portion of water and sufficient ether to form the ether-CCl_4 layer above the water and wash repeatedly with water until all traces of acid are removed as shown by a methyl red indicator test on the water layer. Transfer the ether-CCl_4 layer to a weighed flask and evaporate the solvent on a steam bath, using a current of filtered air to prevent boiling. Remove from the steam bath just prior to the disappearance of the last traces of solvent and continue the flow of air for 10 min. Dry to constant mass in an air bath at 100 ± 5°C, cool, and weigh.

25.4 *Calculation*—Calculate the percentage of mineral oil as follows:

$$\text{Mineral oil, } \% = (A/B) \times 100 \quad (17)$$

where:
A = grams of residue, and
B = grams of specimen used.

26. Rapid Reflux Extracts

26.1 *Scope*—This test method covers the determination of the amount of material removed from a vulcanized product by rapid reflux extraction with a specified solvent or the removal of extractable material from a rubber product that is to be analyzed further (see 18.8). It is applicable only to vulcanized NR, SBR, BR, IR, and IIR products and is used when the extracts themselves are not to be analyzed further. The values obtained are not necessarily equivalent to those obtained by continuous extraction procedures (Sections 19, 20, and 21).

26.2 *Reagents:*
26.2.1 *Acetone.*
26.2.2 *Methyl Ethyl Ketone.*

26.3 *Procedure*—Mill the sample until a homogeneous sheet not more than 0.75 mm (0.030 in.) thick is formed. Cut specimens weighing between 90 and 110 mg into different identifying shapes and weigh to the nearest 0.1 mg. Place 25 cm^3 of methyl ethyl ketone per specimen for complete extract or of acetone for free extract in a 250-cm Erlenmeyer flask for as many as six specimens. Drop the specimens into the flask, connect it to a condenser, and reflux for 60 min. Disconnect the flask and remove it from the hot plate. Pour the contents onto a clean No. 100 (150-µm) sieve to recover the extracted pieces. (The appearance of small particles on the screen indicates loss of part of the specimen.) Gently blot the extracted pieces between paper towels to remove excess solvent. Dry the pieces at 105°C for 15 min. Cool the pieces for 10 min and weigh them to the nearest 0.1 mg.

26.4 *Calculation*—Calculate the percentages of material extracted from a vulcanized material as follows:

$$\text{Complete extract, } \% = (A/B) \times 100 \quad (18)$$

where:
A = mass loss during extraction with methyl ethyl ketone, and
B = mass of specimen used.

$$\text{Free extract, } \% = (A/B) \times 100 \quad (19)$$

where:
A = mass loss during extraction with acetone, and

AVA Documents
Document Sharing Hub

Full document details: ASTM D297-93(2006)

B = mass of specimen used.

$$\text{Bound extract, } \% = A - B \quad (20)$$

where:

A = percentage of complete extract, and
B = percentage of free extract.

SULFUR ANALYSIS

27. Scope

27.1 The test methods for determination of sulfur are for use in determining the quantity of different forms of sulfur found in rubber products. The application to different types of rubber products is covered in the scopes of the specific test methods.

28. Terminology

28.1 *Definitions:*

28.1.1 *Historical Evolution of Definitions*—In the past, the types of sulfur present in a rubber vulcanizate have been defined in various ways, often as a compromise between an absolute definition and a definition of what can be determined by chemical analysis. At the beginning of the development of these analytical test methods, three types of sulfur were defined in a manner in which they could be determined. Free sulfur was the sulfur extractable by acetone. Total sulfur was all of the sulfur, in any form, present in the sample. Sulfur in ash was that sulfur present in inorganic sulfur-bearing fillers plus any sulfur that combined with the fillers during the ashing process. In more recent years, two types of free sulfur were defined; the sulfur extractable with acetone or acetone-chloroform, and that sulfur extractable with sodium sulfite. Total sulfur was redefined to exclude all sulfur in inorganic sulfides and sulfates. This change necessitated the addition of definitions and methods for determination of organic sulfur (organically combined, nonextractable sulfur) and inorganic sulfur; essentially the same, in most cases, as sulfur in ash. In the current revision (28.2) only three terms are officially defined; total sulfur, free sulfur, and combined sulfur. Of these, the first two can be determined accurately, but free sulfur is subject to interpretation of the meaning of the results. Combined sulfur cannot be accurately determined in some cases in its true meaning. Some secondary terms have been retained to aid in describing the steps and methods necessary for the determination of combined sulfur. Sulfur, acetone extract (Section 30) has been retained as a means of determining all extractable sulfur, but free elemental sulfur is not determined by this test method or by the free sulfur test method (Section 29).

28.2 *Definitions, Current:*

28.2.1 *combined sulfur (nonextractable organically combined sulfur)*—the sulfur from any source in a rubber compound which, through the process of vulcanization, has become chemically bound to the rubber or other organic constituents, and which is not removed by extracting solvents. This sulfur, when determined as prescribed in this section and in the absence of nonextractable sulfur-bearing fillers, may, in the ideal case, be an approximation of the sulfur of vulcanization. However, any interpretation of the results must be made with the knowledge that the results may include any of the following: (*1*) sulfur combined with rubber; (*2*) sulfur present in sulfur-bearing rubber chemicals that is not extracted by acetone or acetone-chloroform mixture; (*3*) part of the sulfur present in factice and mineral rubber; (*4*) the sulfur contained in carbon black; (*5*) sulfur in reclaimed rubber that is not extracted by acetone or acetone-chloroform mixture ; (*6*) sulfur in extender oils that may not be extracted; (*7*) a possible error if any of the combined sulfur combines with inorganic fillers during the determination of inorganic sulfur (Section 33). The specimen shall be extracted with acetone (19.4) or with acetone-chloroform mixture (21.4). The latter extracting solvent is preferred, especially if sulfur-bearing additives are known or suspected to be present. Combined sulfur, plus the sulfur present in inorganic compounds, shall be determined on the extracted sample in accordance with Section 31 in the absence of acid-soluble barium salts, antimony and inorganic lead compounds, and in accordance with Section 32 if any of these compounds are present. The combined sulfur shall be calculated by subtracting the inorganic sulfur (Section 33) from the above determined combined sulfur plus inorganic sulfur. Application to NBR and IIR compounds must be verified by use of known control samples.

28.2.2 *free sulfur*—the sulfur in a rubber compound available for further vulcanization that is extractable by sodium sulfite. This sulfur is determined by titrating the thiosulfate resulting from extraction with sodium sulfite solution (50 g/dm^3). It represents essentially elemental sulfur, but will include small amounts of coordinately bound sulfur (such as some of the polysulfide sulfur) and organically bound sulfur in some cases, particularly in the presence of thiuram disulfide compounds. Free sulfur shall be determined in accordance with Section 29.

28.2.3 *sulfur, acetone extract*—the sulfur removed from a rubber by extraction with acetone (Section 19) or acetone-chloroform mixture (Section 21). This method determines elemental sulfur, sulfur in solvent-soluble accelerators and part of the sulfur present in factice, mineral rubber, reclaimed rubber, and extender oils. It does not determine free sulfur, and the inclusion of the method is largely for the purpose of detecting the presence of sulfur-bearing rubber substitutes such as factice and mineral rubber, or for detecting the presence of an unusually large amount of elemental sulfur or accelerators. It shall be determined in accordance with Section 30.

28.2.4 *total sulfur*—all the sulfur present in a rubber compound. The total sulfur shall be determined in accordance with Section 31 in the absence of barium sulfate, acid-soluble barium salts, inorganic lead compounds, and antimony compounds. Section 32 must be used on compounds containing any of the above inorganic compounds.

29. Free Sulfur

29.1 *Scope*—This test method covers the determination of the amount of free sulfur (see 28.2.2) in rubber products. It is applicable to NR, SBR, BR, NBR, CR, and IR products.

29.2 *Apparatus:*

29.2.1 *Filter Crucibles,* filter crucibles that will withstand the firing temperature required in the specific application.

AVA Documents
Document Sharing Hub

Full document details: ASTM D297-93(2006)