Designation: D3429 – 93 (Reapproved 2012)

Standard Test Method for Solubility of Fixed Gases in Low-Boiling Liquids[1]

This standard is issued under the fixed designation D3429; the number immediately following the designation indicates the year of original adoption or, in the case of revision, the year of last revision. A number in parentheses indicates the year of last reapproval. A superscript epsilon (ε) indicates an editorial change since the last revision or reapproval.

1. Scope

1.1 This test method covers the determination of the solubilities of nonreactive gases such as nitrogen and helium in liquids that boil below 273 K. This test method is applicable at temperatures from 77 to 300 K from subambient pressure to 6.5 MPa (65 atm). This test method does not provide for analysis of the vapor phase in equilibrium with the liquid (see Section 3 for a description of terms).

1.2 This test method as written describes the procedures to be followed for determination of the solubilities of helium and nitrogen. If suitable modifications are made to the analytical measurements by gas chromatography, solubilities of other gases such as argon, hydrogen, oxygen, etc., can be determined.

1.3 The values stated in SI units are to be regarded as the standard. In cases where materials, products, or equipment are available in inch-pound units only, SI units are omitted.

1.4 *This standard does not purport to address all of the safety concerns, if any, associated with its use. It is the responsibility of the user of this standard to establish appropriate safety and health practices and determine the applicability of regulatory limitations prior to use.* For specific hazard statements, see 6.1.2 and 7.1 and Annex A1.

2. Referenced Documents

2.1 *ASTM Standards:*[2]

E260 Practice for Packed Column Gas Chromatography

3. Terminology

3.1 *Definitions of Terms Specific to This Standard:*

3.1.1 *carrier gas, n*—gas used to sweep samples through the gas chromatograph.

3.1.2 *elution, n*—the process of removing a material absorbed on the stationary phase of the gas chromatograph column by displacing it with the flowing carrier gas.

3.1.3 *fractionation, n*—change of composition caused by change of pressure.

3.1.4 *liquid or test liquid, n*—solvent for test gas.

3.1.5 *nonreactive gas, n*—gas that does not react chemically with the test liquid.

3.1.6 *test gas, n*—gas whose solubility is being determined.

3.1.7 *vapor, n*—vapor phase of test liquid.

4. Summary of Test Method

4.1 A sample of test liquid *A* is saturated with test gas *B* at specified temperature and pressure. A portion of the solution is withdrawn and vaporized in an evacuated sample container at room temperature. The concentration of gas *B* in the vaporized sample is determined by gas chromatography. It is necessary that the molar concentration of the gas in the sample container be the same as in the liquid phase. This will be true if fractionation of the sample is avoided while withdrawing it from the liquid phase, if no decomposition or polymerization of the test liquid occurs on vaporization, and if the vapor of the test liquid does not react with the walls of the sample container or connecting lines. It is also necessary that both the test gas and the vapor of the test liquid behave nearly ideally at 101 kPa (1 atm). If the above requirements are met, this test method will give estimates of solubility with an accuracy of ±2 %.

5. Significance and Use

5.1 The solubility of fixed gases in liquids is an important engineering parameter in the design of hydraulic systems. It is a measure of the amount of gas that can be released from solution when a system undergoes changes in pressure and temperature. Theoretical considerations permit approximate values of gas solubility to be computed with reasonable accuracy. Dissolved gases are separated and quantified chromatographically. The test method is restricted to use with low-boiling liquid samples.

[1] This test method is under the jurisdiction of ASTM Committee D02 on Petroleum Products, Liquid Fuels, and Lubricants and is the direct responsibility of Subcommittee D02.L0.07 on Engineering Sciences of High Performance Fluids and Solids (Formally D02.1100).

Current edition approved April 15, 2012. Published April 2012. Originally approved in 1975. Last previous edition approved in 2007 as D3429–93(2007). DOI: 10.1520/D3429-93R12.

[2] For referenced ASTM standards, visit the ASTM website, www.astm.org, or contact ASTM Customer Service at service@astm.org. For *Annual Book of ASTM Standards* volume information, refer to the standard's Document Summary page on the ASTM website.

Copyright © ASTM International, 100 Barr Harbor Drive, PO Box C700, West Conshohocken, PA 19428-2959. United States

Documents
Document Sharing Hub
Full document details: ASTM D3429-93(2012)

6. Apparatus

6.1 *Saturator and Sampler System,* suitable for the tests of low-boiling liquids and gases at various pressures and temperatures, shown schematically in Fig. 1. The system comprises four parts:

6.1.1 *High-Pressure Test Chamber,* with internal capacity of approximately (1 L) such as shown in Fig. 2. The lid of the test chamber is equipped with three ports. The first is to contain a thermocouple well, the second is for the addition of the test liquid and pressurization of the system with the test gas, and the third port is for withdrawal of the sample of solution from the liquid phase by means of an eductor tube which extends to the bottom of the chamber. The high-pressure assembly is mounted so that an oscillating motion in a horizontal plane can be applied to it mechanically with a frequency of 1 Hz (one cycle per second) and an amplitude of 0.02 m. Loops (pigtails) are formed in the connecting metal lines to the test chamber to avoid undue stress.

6.1.1.1 An electric motor geared down to provide a shaft speed of about 60 rpm is convenient for providing the necessary agitation. An eccentric or connecting rod from the motor shaft to the support rod imparts an oscillating motion. Without agitation an excessive time is required for equilibrium to be established.

6.1.2 *Nitrogen Vapor Cryostat,* with suitable temperature measurement and control devices, to provide the low-temperature environment for the high-pressure test chamber. The cryostat consists of a cylindrical stainless steel Dewar or other suitable insulated container not less than 0.3 m in inside diameter and approximately 0.5 m in inside depth. A solenoid valve is used to admit liquid nitrogen to the cryostat. The liquid nitrogen cools the cryostat and its contents. The liquid nitrogen (**Warning—**See 7.1.) should be introduced through a diffuser, or in a fine stream behind a sheet metal baffle, so that liquid does not impinge directly on the test chamber or the controller thermocouple. The latter may be attached loosely to the side of the test chamber for convenience, but good thermal coupling to the chamber must *not* be made. Although the nitrogen vapor cryostat can undergo temperature excursions of several degrees, the test chamber will stabilize at a temperature that varies by only a few tenths of a degree because of its thermal inertia. To minimize heat transfer from outside of the apparatus and frost condensation, the top of the cryostat should be loosely covered with a lid of foamed glass or plastic, or other similar insulating material. (**Warning—**Extremely cold. Liberates gas that can cause suffocation. Contact with skin causes burns or freezing, or both. Vapors can react violently with hot magnesium or aluminum alloys. See A1.1.)

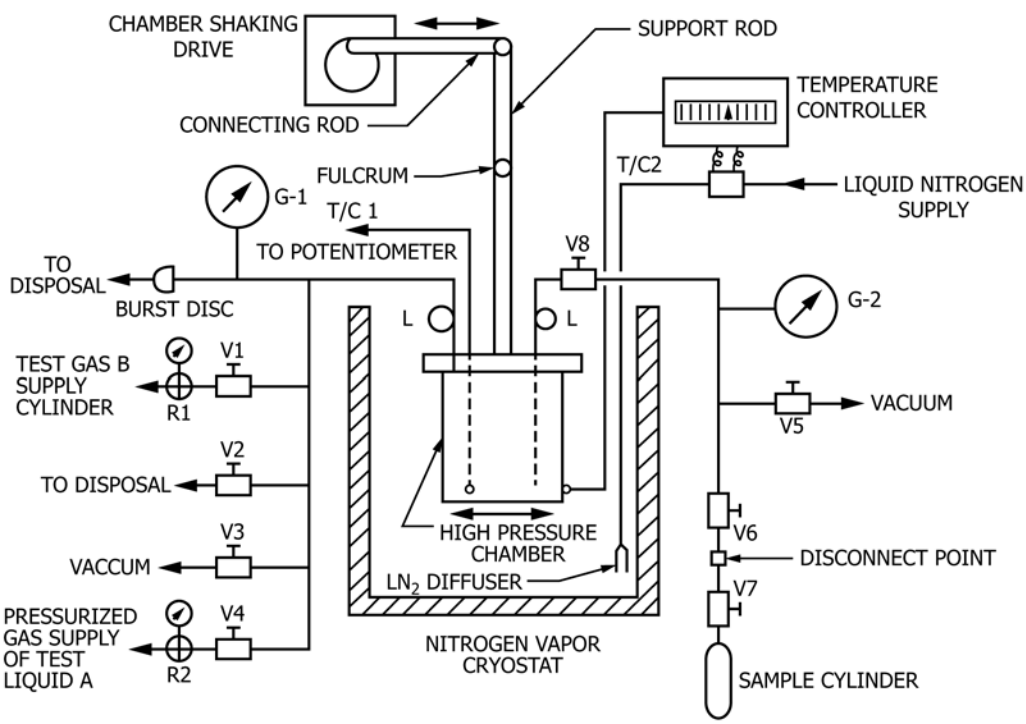

NOTE 1—All lines and fittings 300 series stainless steel.

1. *VI through V8*—Stainless steel valves, metal-to-metal seat, bellows sealed 14 MPa (2000 psi) rating (*V8* modified, see Fig. 3)
2. *T/C-1*—Copper-constantan thermocouple, test liquid temperature.
3. *T/C-2*—Copper-constantan thermocouple, vapor cryostat temperature controller.
4. *G-1*—Bourdon gage, 4½ or 6-in. size, Grade 3A (accuracy ±0.25 % of maximum reading), range 1.5 times highest desired system pressure.
5. *G-2*—Bourdon gage, 3½ to 6-in. size, Grade A or B (accuracy 2 % or better in the middle half of the scale, balance ± 3 % or better), compound range from 0 to 30 in. Hg and a gage pressure from 0 to 103 kPa (0 to 15 psi).
6. *Burst Disk*—Select to release at 50 % higher than maximum desired system pressure
7. *Temperature Controller* —Range 77 to 300 K, accuracy ±0.5 % full range
8. *L*—Loops in stainless steel lines for flexibility.
9. *R1 and R2*—Gas pressure regulators with pressure gage.

FIG. 1 Saturator Apparatus—Schematic

Documents
Document Sharing Hub
Full document details: ASTM D3429-93(2012)

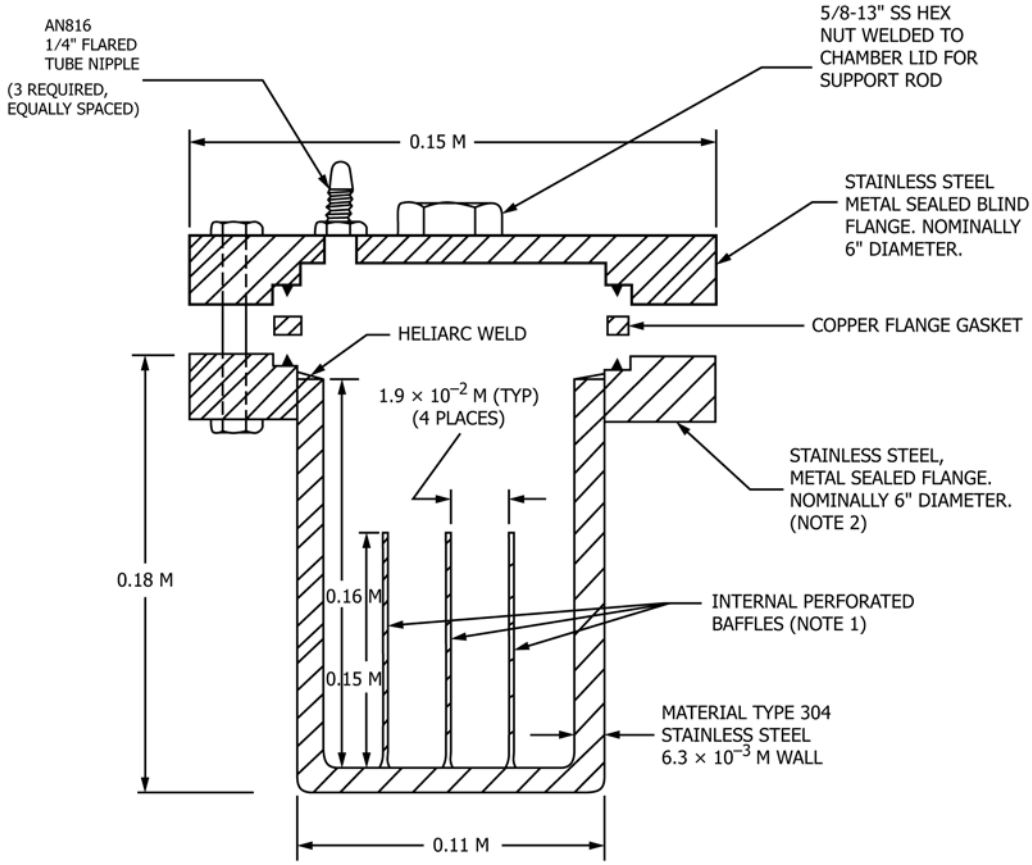

NOTE 1—All material 300 series stainless except flange gasket. Design of perforated baffles not critical but leave 6-mm diameter holes spaced on 20-mm centers are recommended. Baffles should be spot-welded to the inside of the chamber to prevent movement. The purpose of the baffles is to increase turbulence in the liquid and thereby increase the rate of solubility of gas in the test liquid.

NOTE 2—The conflat flange manufactured by the Varian Corp. of Palo Alto, CA, is suitable.

FIG. 2 Test Chamber Detail

6.1.3 *Vacuum and Pressurization Manifold,* required for initial evacuation of the test chamber, filling the chamber with the test liquid, and pressurizing the chamber with the test gas to the desired total pressure. The manifold is shown on the left side of Fig. 1.

6.1.3.1 The burst disk shown in Fig. 1 shall be of the type capable of withstanding an external pressure of 101 kPa (1 atm) when the system is evacuated.

6.1.3.2 The pump used to evacuate the apparatus shall be a good quality oil-filled mechanical pump capable of producing an ultimate vacuum of 0.1 Pa (10^{-6} atm) or better. If condensable vapors or reactive vapors are to be pumped, the pump shall be protected by a suitable absorber or cold trap. The pump shall run continuously for the duration of the test.

6.1.4 *Solution-Sampling System*—This system utilizes a 3-mm (⅛-in.) outside diameter heavy-wall stainless steel eductor tube extending nearly to the bottom of the test chamber. The eductor tube end extending outside the chamber is connected to a valve just above the top of the cryostat, and the outlet of this valve leads to a sample cylinder or container of about 100-mL volume. Each time a sample is withdrawn from the liquid phase, the eductor tube and sampling valve must be purged, otherwise the liquid and vapor in the line will not necessarily be of equilibrium composition. To reduce the amount of liquid lost through purging, the sample valve (*V8* in Fig. 1) should be modified to reduce liquid holdup to a minimum. The details of this modification are shown in Fig. 3.

6.2 *Gas Chromatograph,* required for determination of the gas concentration in the sample. It must be equipped with a gas sampling valve. It is desirable that two different size loops be provided so that the sample size can be adjusted depending on the concentration of test gas to be determined. Sample loops of 0.5 and 2.0 mL are recommended. The gas chromatograph system must permit easy and rapid change of carrier gas and columns to suit a wide variety of analytical requirements. A thermal conductivity detector of the glass-coated bead type is recommended. The instrumentation should provide a variable attenuator for the detector signal so that a wide range of fixed gas concentrations may be accommodated. A suitable chart recorder, preferably equipped with integrator, should be provided. Alternatively, a digital readout may be used. A typical gas chromatograph is shown schematically in Fig. 4, and its power supply is shown in Fig. 5.

NOTE 1—Practice E260 provides further description.

6.3 *Leak Testing*—All parts of the system should be tested with helium for leakage at a pressure 1.5 times test operating pressure and vacuum leak tested. The test should include

AVA Documents
Document Sharing Hub

Full document details: ASTM D3429-93(2012)