NOTICE: This standard has either been superseded and replaced by a new version or withdrawn.
Contact ASTM International (www.astm.org) for the latest information

Designation: D378 – 00 (Reapproved 2008)

Standard Test Methods for Rubber (Elastomeric) Belting, Flat Type[1]

This standard is issued under the fixed designation D378; the number immediately following the designation indicates the year of original adoption or, in the case of revision, the year of last revision. A number in parentheses indicates the year of last reapproval. A superscript epsilon (ε) indicates an editorial change since the last revision or reapproval.

1. Scope

1.1 These test methods (and references) cover the procedures for evaluating the physical properties of flat conveyor belting. Performance criteria for belting will not be detailed here, but can be found through the RMA (Rubber Manufacturers Association) Conveyor and Elevator Belt Handbook, ANSI (American National Standards Institute), various governmental authorities, and the International Organization for Standardization (ISO). Belting for conveying and elevating materials generally is designated and defined as follows:

1.1.1 *Heavy Duty Conveyor*—A heavy duty belt is defined as belting designed for bulk haulage of materials, such as stone, crushed rock, sand, metals ores, coal, wood chips, etc., and has a carcass strength (design) substantial enough to withstand conveyor system tensions of 160 PIW[2] (pounds per inch of width) and above.

1.1.2 *Light Duty Conveyor*—A light duty belt is defined as belting designed for conveying a variety of lower weight (density) materials, packages, industrial and electronic goods, and food products. These belts often are shorter in length and width, with less overall thickness than heavy duty belting, and are generally used in conveyor systems with tensions less than 160 PIW.

1.1.3 *General Description*—Belting can have elastomeric coverings on one side, both sides, or neither side depending upon the specific application requirements. Belt coverings are comprised of various synthetic or natural rubber polymers, PVC, or other elastomeric materials, dependent upon application or customer requirements. The strength (load bearing) member(s) of most belting generally is a woven or interwoven carcass of synthetic or natural fibers, such as, but not limited to, polyester, nylon, polyaramide and cotton, as well as steel (cable/cord type or woven mesh).

1.2 *This standard does not purport to address all of the application specific testing available or safety concerns, if any, associated with its use. It is the responsibility of the user of this standard to establish appropriate safety and health practices and determine the applicability of regulatory limitations prior to use.*

2. Referenced Documents

2.1 *ASTM Standards:*[3]

D412 Test Methods for Vulcanized Rubber and Thermoplastic Elastomers—Tension
D413 Test Methods for Rubber Property—Adhesion to Flexible Substrate
D471 Test Method for Rubber Property—Effect of Liquids
D573 Test Method for Rubber—Deterioration in an Air Oven
D624 Test Method for Tear Strength of Conventional Vulcanized Rubber and Thermoplastic Elastomers
D865 Test Method for Rubber—Deterioration by Heating in Air (Test Tube Enclosure)
D1149 Test Methods for Rubber Deterioration—Cracking in an Ozone Controlled Environment
D1415 Test Method for Rubber Property—International Hardness
D1630 Test Method for Rubber Property—Abrasion Resistance (Footwear Abrader)
D1894 Test Method for Static and Kinetic Coefficients of Friction of Plastic Film and Sheeting
D2228 Test Method for Rubber Property—Relative Abrasion Resistance by Pico Abrader Method
D2240 Test Method for Rubber Property—Durometer Hardness
D3183 Practice for Rubber—Preparation of Pieces for Test Purposes from Products
D3389 Test Method for Coated Fabrics Abrasion Resistance (Rotary Platform Abrader)
D3767 Practice for Rubber—Measurement of Dimensions
D4483 Practice for Evaluating Precision for Test Method Standards in the Rubber and Carbon Black Manufacturing Industries
D5963 Test Method for Rubber Property—Abrasion Resistance (Rotary Drum Abrader)

[1] These test methods are under the jurisdiction of ASTM Committee D11 on Rubber and are the direct responsibility of Subcommittee D11.31 on Rubber Hose and Belting.

Current edition approved Jan. 1, 2008. Published February 2008. Originally approved in 1991. Last previous edition approved in 2000 as D378 – 00. DOI: 10.1520/D0378-00R08.

[2] PIW is not an SI unit.

[3] For referenced ASTM standards, visit the ASTM website, www.astm.org, or contact ASTM Customer Service at service@astm.org. For *Annual Book of ASTM Standards* volume information, refer to the standard's Document Summary page on the ASTM website.

Copyright © ASTM International, 100 Barr Harbor Drive, PO Box C700, West Conshohocken, PA 19428-2959, United States.

Full document details: ASTM D378-00(2008)

2.2 *ISO Standards:*[4]

ISO 282 Conveyor Belts—Sampling

ISO 283 Conveyor Belts—Full Thickness Tensile Strength and Elongation—Specifications and Method of Test

ISO 284 Conveyor Belts—Electrical Conductivity—Specification and Method of Test

ISO 340 Conveyor Belts—Flame Retardation—Specifications and Test Method

ISO 471 Rubber—Temperatures, Humidities and Times for Conditioning and Testing

ISO 505 Conveyor Belts—Tear Propagation Resistance of the Carcass—Method of Test

ISO 4649 Rubber—Determination of Abrasion Resistance Using a Rotating Cylindrical Drum Device

ISO 7590 Steel Cord Conveyor Belts—Cover Thickness Measurement

ISO 7622–1 Steel Cord Conveyor Belts—Longitudinal Traction Test—Part 1: Measurement of Elongation

ISO 7622–2 Steel Cord Conveyor Belts—Longitudinal Traction Test—Part 2: Measurement of Tensile Strength

ISO 7623 Steel Cord Conveyor Belts—Cord-to-Coating Bond Test—Initial Test and After Thermal Treatment

ISO 8094 Steel Cord Conveyor Belts—Adhesion Strength Test of the Cover to the Core Layer

ISO 9856 Conveyor Belts—Determination of Elastic Modulus

2.3 *RMA Technical Bulletins and Test Methods:*[5]

IP-1 Conveyor and Elevator Belt Handbook

2.4 *U.S. Mine Safety and Health Administration (MSHA):*[6]

30 CFR 18.65 Flame testing of Conveyor Belting and Hose

2.5 *Deutsches Institut fur Normung e.V. (DIN):*[7]

DIN 53516 Testing of Rubber and Elastomers; Determination of Abrasion Resistance

3. Summary of Test Methods

3.1 ASTM test methods are specified to the extent that they can be applied to testing of flat belts.

3.2 Some of the test methods specified for flat belts are specific to flat belts only and do not appear in any other ASTM standard; however, some of these may involve use of ASTM test methods.

3.3 The test methods include the following:

Test Methods	Section
Measurement of Dimensions	8
Physical Properties of Elastomeric Covers	9
Immersion Tests	10
Adhesion Tests	11
Breaking Strength and Modulus Testing	12
Flame Test for Belting	13
Carcass Tear Test	14
Troughability Test	15
Breaking Strength of Mechanical Fastenings (Static Test Method)	16
Elevator Belt Bolt Holding Strength Test	17
Steel Cord/Cable Belt Testing	18

4. Significance and Use

4.1 Flat conveyor belts are used in many industrial applications in which they are subjected to a great variety of stresses and conditions. Service conditions can be calculated or measured. Design levels and test requirements are established by manufacturers, or end-users, or both. The tests (test methods) are used to measure the characteristics of conveyor belting as they relate to service conditions.

4.2 The tests outlined by these test methods are commonly applied by belt manufacturers to control the quality of their products.

4.3 Research and product development activities in flat belting involve extensive testing as outlined by these test methods.

4.4 In case of conflict between the provisions of these test methods and those of detailed specifications or test methods for a particular belt, the latter shall take precedence.

4.5 In case of conflict between the provisions of these test methods and those of detailed specifications or test methods for a particular belt, the latter shall take precedence.

5. Sampling

5.1 Test samples shall be the full width and thickness of the belt and shall be of sufficient length and width to perform the desired tests.

5.2 The level or number of samples required from each belt (or lot) shall be sufficient to cover the primary characteristic(s) being tested. Adhesion, overall thickness, hardness, and cover thickness testing usually requires a sample from each end of the belt or lot as a minimum. Reference ISO 282 for international sampling requirements.

6. Number of Tests

6.1 When minimum requirements are established, one specimen shall be tested for each physical characteristic required in the detailed specifications for a particular belt.

6.2 If minimum requirements are not established, a median of the values for three specimens shall be taken as the characteristics of the piece, except that under referee conditions the mean value for five specimens shall be used.

6.3 When doing immersion and aging tests it is necessary to test three specimens both before and after immersion or aging to determine a percentage change.

7. Test Conditions

7.1 Unless otherwise specified, conditioning and testing shall be carried out at a temperature of 23 ± 2°C (73.4 ± 3.6°F) and 50 ±5 % RH. Unless otherwise specified (for other than quality control), sample specimens shall be conditioned for at least three days at the standard conditions. Any and all test temperatures and conditions are reported.

7.2 For time between manufacture and test unless otherwise specified (for other than quality control), test pieces shall be cut or prepared at least five days after the belt is manufactured.

[4] Available from American National Standards Institute, 11 W. 42nd St., 13th Floor, New York, NY 10036.

[5] Available from the Rubber Manufacturers Association, 1400 K St. N.W., Suite 900, Washington D.C. 20005, (202) 682-4800, www.rma.org.

[6] Available from Mine Safety & Health Administration, U. S. Department of Labor, 4015 Wilson Boulevard, Arlington, VA 22203, (703) 235-2600, www.msha.gov.

[7] Available from DIN Deutsches Institut fur Normung, Burggrafenstrasse 6, D-10787 Berlin, 49 30 26 01-0, www.din.de.

AVA Documents
Document Sharing Hub

Full document details: ASTM D378-00(2008)

8. Measurement of Dimensions

8.1 *Width*—Determine the width using a steel rule or tape graduated in millimeters (or sixteenths of an inch) in conformance with Method C of Practice D3767. Record the width (length) in millimeters (or inches) to the nearest 1 mm (0.04 in.).

8.2 *Belt Length*—Belt length is determined using a calibrated wheel meter or calibrated tape rule. Length should be measured on a line parallel to the sides of the belt. Record the length in meters or feet.

8.3 *Total Belt Thickness*—The thickness of a full width belt sample is determined as a mean average of measurements (sample points) across the full width of the sample. The number of sample points required varies according to width: three equidistant measurement points for belt widths of 600 mm (24 in.) or less, five measurement points for belts greater than 600 mm (24 in.), up to 1200 mm (48 in.), and eight points for belts greater than 1200 mm (48 in.). Report the thickness to the nearest 0.02 mm (or 0.001 in.).

8.4 *Thickness of Covers*—The thickness of the top or bottom cover shall be determined as follows: first, measure the over-all thickness of the test specimen; then, strip the elastomeric cover from one surface and measure the thickness of the carcass, including the remaining cover. The difference between the first and second measurements will represent the thickness of the cover removed. Follow the same procedure on the test specimen from which the first cover has been removed when the thickness of the other cover is required. The test specimen may consist of a small section cut from the belt. In many cases, especially with PVC or TPE (thermoplastic elastomer) belting of interwoven (solid woven) carcass construction, the covers cannot be removed without distorting the sample. Buffing, to remove thermoplastic cover(s) from the specimen, may be necessary. In other cases, a hand-held micrometer or optical micrometer is used to measure the thickness of the components.

8.5 *Thickness of Cover When a Breaker Is Used*—The thickness of the cover shall include the breaker, unless otherwise specified.

9. Physical Properties Of Elastomeric Covers Or Belt Surfaces (Or Both)

Scope—A number of specific test procedures for determining a variety of physical properties of conveyor belt cover material are detailed in this section. These tests are extensive and are referenced to established test procedures; primarily existing ASTM and ISO standards. It is beyond the scope and necessity of this section to detail every procedure in its entirety. This section is intended to serve as a guide for the testing of these materials. The routine tests (and references) for tensile, elongation, hardness, tear resistance, and accelerated aging are covered through Section 9.6. More specific tests (references) for other properties, such as coefficient of friction, abrasion resistance, ozone deterioration, and static conductivity are covered through Sections 9.7-9.10, respectively.

9.1 *Apparatus*—The dies, bench marker, stamp, pad, micrometer, testing machine, testing machine grips, and calibration of the testing machine shall conform to Test Methods D412.

9.2 *Test Specimens*:

9.2.1 *Preparation of Cover Pieces*—Separate the covers from the carcass according to Practice D3183. Buff the covers if necessary to obtain smooth parallel surfaces. If possible, cover pieces should be about 150 mm (6 in.) long, at least 25 mm (1 in.) wide, and 2.0 ±0.2 mm (0.08 ±0.008 in.) thick. In no case shall the thickness exceed 3 mm (0.12 in.) or be less than 1 mm (0.04 in.). A meat slicer or commercial skiving tool can be used to remove adequate sample specimens from the belt cover. If cover pieces cannot be obtained from the belt, molded sheets prepared from the same unvulcanized rubber compound with an equivalent state of vulcanization may be requested from the belt manufacturer.

9.2.2 *Preparation of Test Specimen*—The test specimen shall be stamped out from the separated cover with a steel die conforming to A, B, or C of Fig. 1 of Test Methods D412. Die B shall be used when the size of the sample and the tension and stretch limits of the testing machine permit, with exceptions as explained below. If the tension limit is too low for the machine, Die A shall be used. If the stretch limit is too high for the machine, Die C shall be used. Die C shall be used for samples that are too small for Die A or B.

9.2.3 *Marking*—Dumbbell specimens shall be marked with the prescribed stamp pad and either of the prescribed bench markers described in Test Methods D412. Aged or immersed dumbbell specimens shall be marked after oven aging or immersion testing.

9.3 *Procedure*—Use the procedure for tensile testing, measuring and recording in accordance with Test Methods D412. Measure and record the elongation to the nearest 10 % of the original distance between bench (reference) marks.

9.3.1 *Calculations*:

9.3.2 *Tensile Strength*—The tensile strength (stress) is the applied force relative to the original cross-sectional area. It is calculated by dividing the force in N (lbf) by the cross-sectional area of the unstressed specimen in square meters (in.^{2}) and is expressed in MPa or psi.

9.3.3 *Elongation*—The elongation (strain) is the extension between bench (reference) marks, produced by a tensile force applied to a specimen, relative to the original distance between the marks. It is calculated by dividing the distance extended beyond the original distance by the original distance and is multiplied by 100 to get percent.

9.4 *Cover Hardness*—Refer to either Test Method D1415 or D2240 for procedures and calculation. The values should be expressed in International Hardness or Durometer Hardness units.

9.5 *Cover Tear Test*—Testing is conducted per Test Method D624. Results are expressed in units of pounds per inch (thickness), ppi, or kilo Newtons per meter, kN/m. The type die, B, C, or trouser test method shall be included in the test report. Preparation of the samples is accomplished as described in 9.2.1.

AVA Documents
Document Sharing Hub

Full document details: ASTM D378-00(2008)

9.6 *Procedure For Physical Properties Of Elastomeric Covers After Heat Aging*—Proceed in accordance with either Test Method D573 or D865.

9.7 *Coefficients Of Friction, Static And Kinetic*—Test Method D1894 is used to determine relative values for these surface properties.

9.8 *Abrasion Resistance*—Test methods used and referred to most frequently in the conveyor belt industry are PICO (Test Method D2228), TABOR (Test Method D3389), NBS (Test Method D1630), DIN 53516, ISO 4649, and Test Method D5963.

9.9 *Ozone Resistance*—The effect of exposure to ozone is determined by Test Methods D1149 with results reported as pass/fail (cracking) for exposures to specified ozone concentrations in parts per hundred million (pphm), at specific temperatures and time duration(s).

9.10 *Electrical Surface Resistance*—The electrical surface characteristics of conveyor belting are tested based on the original RMA procedure (RMA 808) since adopted as ISO 284. An abbreviated procedure for this testing is detailed.

9.10.1 *Principle*—An electrical current of specified voltage is passed through electrodes of a suitably prepared test piece taken from the belt.

9.10.2 *Apparatus (see Fig. 1)*:

9.10.2.1 A sheet of insulating material slightly larger than the test specimen.

9.10.2.2 Two cylindrical and coaxial brass electrodes, the base of one being circular and the other annular. The circular electrode will have an OD of 150 mm (6 in.) and an ID of 125 mm (5 in.) and a height of 22 mm (0.9 in.), with a mass of 900 g (31.8 oz). The annular electrode has a diameter of 25 mm (1 in.) and a height of 32 mm (1.25 in.), with a mass of 115 g (4.06 oz). The bases of these electrodes will be machined flat and polished. Flexible insulated wire is connected to each electrode.

9.10.2.3 *Resistance Measuring Instrument*—capable of giving readings between 10^5 and 10^{10} ohms, ±5 %.

9.10.2.4 Source of direct current at 1000 V maximum.

9.10.3 *Test Pieces*—two belt samples.

9.10.3.1 *Shape and Dimensions*—square samples including covers, 300 mm × 300 mm (12 in. × 12 in.).

9.10.3.2 *Preparation*—Both surfaces of the specimen(s) are cleaned thoroughly by rubbing with Fuller's earth, using a clean cloth. All traces of residue are to be removed and the surface wiped with a clean cloth and distilled water and dried.

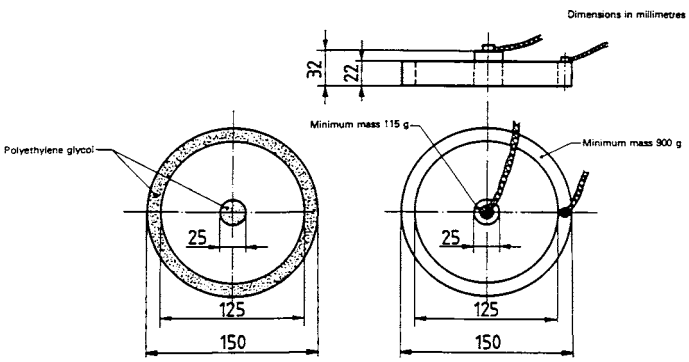

FIG. 1 Apparatus for Testing of Electrical Surface Resistance

A solution of anhydrous polyethylene glycol (mol. wt. 600), 800 parts by mass and distilled water 200 parts by mass with one part of soft soap, is applied on one surface of the test specimen in areas corresponding to the electrode surfaces.

9.10.4 *Conditioning*—Sample should be conditioned for at least 2 h at 23 ± 2°C (73.4 ± 3.6°F) and 50 ±5 % RH.

9.10.5 *Procedure*—Place test piece on the insulating material with the liquid pattern facing up. Clean the lower faces of the brass electrode and place them on the liquid contact agent. Connect the outer electrode to the earth (lower voltage) terminal of the measuring instrument and the inner electrode to the high voltage terminal. Measure the resistance after applying full voltage for 1 min. Repeat the procedure for the other side (surface) of the test piece (and again for both sides of the second sample piece).

9.10.6 *Expression of Results*—Record the electrical resistance (mean value) for each surface of the sample(s) in ohms.

9.10.7 *Report*:

a) The identification of the belt sample.

b) Test conditions.

c) The results (in ohms) for each surface (side) of the sample.

9.11 *Report—Cover Properties*:

9.11.1 Follow the reporting format according to the referenced procedures.

10. Immersion Tests

10.1 *Purpose*—Immersion tests are necessary when determining the effects of various fluids, oils, and service media on elastomeric belt covers and belts.

10.2 *Test Method*—Use Test Method D471.

10.3 *Specimens*—Cover samples are obtained and prepared as in Section 9.2.

10.4 *Test Liquids*—For standard oil exposure use ASTM Oil No. 1 or IRM 903. For non-oil applications, use the actual service fluid or representative test media. Designate this medium for the test report.

10.5 *Test Conditions*—For ASTM test Oil No. 1 or IRM 903, the test shall be 70 h at 100°C (212°F). When the actual service fluid is used, the user and the manufacturer should agree on the test conditions.

10.6 *Report*—List the changes in tensile strength, elongation, and volume after exposure to the test fluid. Record the test fluid and the time and temperature of exposure.

11. Adhesion Tests

11.1 *Apparatus*—Use the static mass or machine method apparatus in accordance with Test Methods D413.

11.2 *Test Specimens*—The 25 mm (1 in.) wide by 150 mm (6 in.) minimum long test specimen shall be cut with the longer dimension longitudinally from belts less than 150 mm (6 in.) wide but transversely from belts 150 mm (6 in.) and greater in width. Separate each layer a sufficient distance to permit securing it in the jaws of the testing clamp.

11.2.1 *Number*—One specimen, cut longitudinally, or transversely, or both.

11.2.2 *Conditions*—Standard in accordance with Section 7.

AVA Documents
Document Sharing Hub

Full document details: ASTM D378-00(2008)