NOTICE: This standard has either been superseded and replaced by a new version or withdrawn.
Contact ASTM International (www.astm.org) for the latest information

Designation: D 3880 – 90 (Reapproved 1999)

Standard Test Method for Asbestos Strength Units[1]

This standard is issued under the fixed designation D 3880; the number immediately following the designation indicates the year of original adoption or, in the case of revision, the year of last revision. A number in parentheses indicates the year of last reapproval. A superscript epsilon (ϵ) indicates an editorial change since the last revision or reapproval.

1. Scope

1.1 This test method gives a procedure for the evaluation of the strength-giving properties of asbestos fibers used to reinforce asbestos-cement products.

1.2 The purpose of this test method is to determine the number of strength units that may be assigned to the sample tested.

1.3 Asbestos fiber possesses the ability to impart strength to an asbestos-cement product. Every fiber grade may be regarded as possessing a certain quantity of strength-giving units. The quantity of fiber required in an asbestos-cement composition varies inversely with the number of strength units it possesses. For example, if an amount, designated by X, of a fiber possessing 100 strength units produces a product of a given strength, $2X$ would be required to produce a product of equivalent strength from fiber possessing only 50 strength units.

1.4 The following definition is the basis for the strength unit test: An asbestos fiber that gives the standard strength at the standard density when used as 10 % of the furnish is defined as having 100 strength units. Therefore, by knowing the percent fiber required in the mix to give standard strength at the standard density, it is possible to calculate the strength units of a sample of asbestos.

1.5 This procedure is intended primarily for chrysotile asbestos; it has not been verified whether or not it is applicable to other types.

1.6 The values stated in SI units are to be regarded as the standard. The values given in parentheses are for information only.

1.7 *This standard does not purport to address all of the safety concerns, if any, associated with its use. It is the responsibility of the user of this standard to establish appropriate safety and health practices and determine the applicability of regulatory limitations prior to use.* For specific precautionary statements see 8.1.1, 9.2.2 and Note 6.

2. Referenced Documents

2.1 *ASTM Standards:*

C 150 Specification for Portland Cement[2]
C 184 Test Method for Fineness of Hydraulic Cement by the 150-µm (No. 100) and 75-µm (No. 200) Sieves[2]
C 204 Test Method for Fineness of Portland Cement by Air Permeability Apparatus[2]
C 430 Test Method for Fineness of Hydraulic Cement by the 45-µm (No. 325) Sieve[2]
C 1120 Test Method for Wash Test of Asbestos[3]
C 1121 Test Method for Turner and Newall (T and N) Wet-Length Classification of Asbestos[3]
C 1162 Test Method for Loose Density of Asbestos[3]
D 1193 Specification for Reagent Water[4]
D 1655 Specification for Aviation Turbine Fuels[5]
D 2590 Test Method for Sampling Chrysotile Asbestos[3]
D 2946 Terminology Relating to Asbestos and Asbestos-Cement Products[3]
D 2589 Test Method for McNett Wet Classification of Asbestos Fiber[3]
D 3639 Test Method for Classification of Asbestos Fibers by Quebec Standard Test[3]
D 3752 Test Method for Strength Imparted by Asbestos to a Cementitious Matrix[3]
E 11 Specification for Wire-Cloth Sieves for Testing Purposes[6]

2.2 *Other Standards:*

Quebec Asbestos Mining Association (QAMA) Standard, Designation for Chrysotile Asbestos Grades[7]

3. Terminology

3.1 *Definitions:*

3.1.1 *point value, n— in asbestos*, an index of commercial value of asbestos fiber used in asbestos-cement products. Point value = (SU-10)/1.39 where SU stands for strength units.

[1] This test method is under the jurisdiction of ASTM Committee C-17 on Fiber-Reinforced Cement Products and is the direct responsibility of C17.03 on Asbestos-Cement Sheet Products and Accessories.

Current edition approved Oct. 26, 1990. Published December 1990. Originally published as D 3880 – 80. Last previous edition D 3880 – 88.

[2] *Annual Book of ASTM Standards*, Vol 04.01.
[3] *Annual Book of ASTM Standards*, Vol 04.05.
[4] *Annual Book of ASTM Standards*, Vol 11.01.
[5] *Annual Book of ASTM Standards*, Vol 05.01.
[6] *Annual Book of ASTM Standards*, Vol 14.02.
[7] Available from Asbestos Institute, 1130 Sherbrooke St. West, Montreal, Q.C., H3A2 M8.

Copyright © ASTM International, 100 Barr Harbor Drive, PO Box C700, West Conshohocken, PA 19428-2959, United States.

Documents
Document Sharing Hub
Full document details: ASTM D3880-90(1999)

3.1.2 *strength unit, n— in asbestos*, unit of reinforcing potential of asbestos fiber in asbestos-cement products. An asbestos fiber that yields a flexural modulus of rupture of 27 MPa at a product density of 1.6 g/cm^3 when used as 10 % of the furnish (dry ingredients) is defined as having 100 strength units. Therefore, the number of strength units of a given asbestos is equal to 1000/(% fiber required in the dry mix to yield 27 MPa at 1.6 g/cm^3).

3.1.3 Refer to Terminology D 2946 for other terms relating to asbestos.

4. Summary of Test Method

4.1 This test method covers the fabrication and flexural testing of asbestos-cement test specimens that contain asbestos fiber from the sample being evaluated. The calculation of strength units of the asbestos, based upon the flexural strength, density and composition of the test specimens, is also described.

4.2 The specimen fabrication process includes the following steps:

4.2.1 *Asbestos fiber preparation*, including ball milling, fiberizing, and blending.

4.2.2 *Compounding*, including dry mixing, the preparation of saturated water, and wet mixing.

4.2.3 *Test specimen formation*, including the pressing of asbestos-cement cakes in a semi-automatic press.

4.2.4 *Specimen curing*, including a stage in a humidity cabinet, autoclaving, air cooling, and saturating in a water bath.

4.3 *Specimen testing*, including the determination of immersed mass, saturated mass, flexural strength, specimen thickness and width, and dry mass.

4.4 *Calculations*, involving the determination of specimen volume, modulus of rupture, density, modulus of rupture adjusted for density, asbestos fiber content required to attain standard strength, fiber ratio required, point value, and strength units.

5. Significance and Use

5.1 This test method facilitates the comparison of different types and grades of chrysotile asbestos by the property most pertinent to its use in asbestos-cement, namely, the strength or reinforcing value it imparts to the product.

5.2 While similar comparative results could be obtained on any given production equipment, this method allows the testing of small samples, avoids costly interruptions in production for numerous trial runs, and allows test values to be obtained by a single standard method so that results can be compared among different locations.

5.3 Strength Unit (SU) value of a fiber blend used in asbestos-cement products may be estimated by taking the proportionate SU value of each component of the fiber blend.

5.4 If the fiber blend is formulated with the aim to optimize another fiber property such as filterability, the SU calculation will assure that the blend will not fall below an acceptable strength level.

5.5 This test method is restricted to grades of asbestos used in asbestos-cement products. Very long (Group 3) fibers are difficult to evaluate by this method because the test specimens produced may not be sufficiently homogeneous. Similarly, very short (Group 7) grades may not be retained satisfactorily in the mold during the pressing of test specimens or may not provide sufficient strength to meet the test requirements.

NOTE 1—The term Group 3 or 7 refers to the standard designation for chrysotile asbestos grades established by the Quebec Asbestos Mining Association, See 2.2.

5.6 Because of certain differences between this method and the many variations in plant production procedure commonly used in asbestos-cement manufacture, it is emphasized that the strength values obtained by this standardized procedure will not necessarily give exactly the same strength values as obtained at any one specific manufacturing plant.

6. Apparatus

6.1 *Ball Milling*:

6.1.1 *Porcelain Ball Mill Jars*, [8] meeting the following specifications:

Capacity	11 000 cm^3(671 in.^{3})
External diameter	280 mm (11.02 in.)
Internal diameter	230 mm (9.06 in.)
Internal height	210 mm (8.27 in.)

6.1.2 *Porcelain Balls*, [9] machine made, meeting the following specifications:

Diameter	40 mm (1.575 in.)
Mass (each)	74 to 75 g (0.163 to 0.165 lb)
Specific activity	2.3 ± 0.1 (The manufacturer specifies a nominal specific gravity of 2.22.)

Alternatively, handmade balls approaching these specifications may be used.

6.1.2.1 Discard balls when their diameter is 35 mm (1.38 in.) or less.

6.1.3 *Roll Table*, to rotate the ball mill jars at 6.81 ± 0.21 rad/s (65 ± 2 r/min). See Note 2.

6.2 *Fiberizing*:

6.2.1 *Disintegrator*, [10] B.O.P. (Ball, Opener, Penmen) Type O, driven at 565 ± 21 rad/s (5400 ± 200 r/min) by a squirrel-cage induction motor rated at no less than 1.492 kW (2 hp).

6.2.2 *Perforated Steel Discharge Plates*, for the fiberizer. One each of the following opening diameters: 3, 5, 7 and 10 mm, ± 3 %. Holes must be on an equilateral triangular pitch with wire edges pointing outward.

6.2.3 *Cardboard Drum*, approximately 410 mm (16 in.) in diameter by 400 mm (15 in.) in height with removable ring clamp on top, and canvas dust cover (transition piece) to serve as a receiver for the fiberizer discharge. Other arrangements for receiving the fiberizer discharge that are satisfactory with respect to relief of static pressure generated by the fiberizer rotor and with respect to the prevention of sample losses and

[8] Type KU5a ball mill jars, and machine-made balls, manufactured by Staatliche Porzellan Manufaktur, Berlin Werk Seld, Selb/afr. Hartmannstrasse 1–3, German Federal Republic (West Germany), have been found suitable. These are distributed by Fish-Schurman, 70 Portman Road, New Rochelle, NY.

[9] Manufactured by Ateliers de Lessines S.A., Division BOP, 55 rue de Wauthier 1020, Bruxelles, Belgium.

[10] Those supplied by Canadian Laboratory Supplied Limited, Box 2090 Stn. St. Laurent, Montreal 307, P. Q., Canada, are suitable. Specify dimensions required, request a design similar to Catalog No. J3028, and refer to Canlab Quotation No. 2713 (1969).

AVA Documents
Document Sharing Hub

Full document details: ASTM D3880-90(1999)

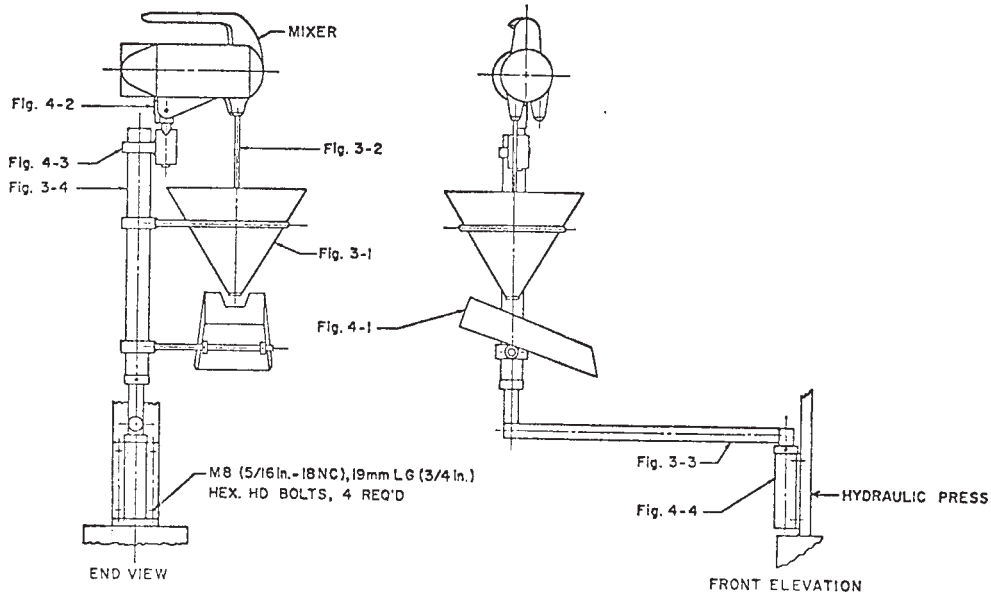

FIG. 1 Wet-Mixer Assembly

contamination are acceptable. The free area of cloth while in operating position must be within the limits from 1300 to 4500 cm ^{2}, and the cloth must be square weave, unbleached cotton duck weighing 0.41 ± 0.02 kg/m^2(12 oz/yd^2), or a cloth of equivalent permeability.

6.3 *Blending*:

6.3.1 *Polyethylene Jar with Cover*, [11] meeting the following specifications:

Inside diameter	311 mm (12.25 in.)
Outside diameter	327 mm (12.875 in.) (wall thickness 8 mm (0.3 in.)
Inside height	311 mm (12.25 in.)

Other containers, such as stainless steel blenders, with similar internal dimensions may be used.

6.3.1.1 The jar may be fitted with a circumferential rubber tension band 100 mm (3.94 in.) wide by 3 mm (0.125 in.) thick to retain the cover. This band may be rolled down, turtleneck fashion, when the cover must be opened. Alternatively, the cover may be retained by mechanical clamps. In that case, the use of a gasket to seal the cover may be necessary.

6.3.1.2 The jar must be fitted with tires around the outer diameter to allow it to roll on a roll table in a horizontal attitude and to allow any clamps or projections to clear the rolls.

6.3.2 *Roll-Table*, to rotate the blending jar at a speed of 5.87 ± 0.21 rad/s (56 ± 2 r/min). See Note 2.

6.3.3 *Rolling Sheet*, 1 m^2(1 yd^2) or larger, made of rubber, plastic, or some other flexible elastomer.

6.4 *Dry Mixing*:

6.4.1 *Polyethylene Jar with Cover*, [11] meeting the following specifications:

Inside diameter	248 mm (9.75 in.)
Outside diameter	257 mm (10.125 in.)
Inside height	273 mm (10.75 in.)
Capacity	13 200 cm^3

Other containers, such as stainless steel mixers, with similar internal dimensions may be used.

6.4.1.1 The jar must be fitted with a rubber band as described in 6.3.1.1.

6.4.1.2 The exterior of the jar must be fitted with tires as described in 6.3.1.2.

6.4.1.3 The interior of the jar must be fitted with three mixing vanes located 2.09 rad (120°) apart, along the full length of the jar and projecting 38.1 mm (1.5 in.) from the inside wall. The vanes may be fastened to the wall by smooth head rivets or an adhesive. The corners of the vanes at the jar opening should be rounded to a radius of 12.7 mm (0.5 in.). The vanes may be fabricated from aluminum or any other corrosion-resistant sheet metal 1 mm (0.04 in.) thick.

6.4.2 *Roll-Table*, to rotate the blending jar at a speed of 8.17 ± 0.21 rad/s (78 ± 2 r/min).

NOTE 2—If a judicious choice of drive roll diameter and speed is chosen for the roll table, together with suitable tire dimensions for containers mentioned in 6.1.1, 6.3.1 and 6.4.1, it is possible to use the same roll table for the three containers. For example, if the drive roll has a diameter of 125 mm (4.93 in.) and a speed of 17.3 rad/s (165 r/min), then the appropriate speed would be obtained for each container if tires were adjusted to bring the effective outer diameters to 311 mm (12.25 in.) for the ball mill jars, 361 mm (14.21 in.) for the blending jars, and 259 mm (10.2 in.) for the dry-mixing jars.

6.5 *Wet Mixing*:

6.5.1 *Wet Mixer*, as described in Fig. 1, Fig. 2, Fig. 3 and Fig. 4 and mounted on the press. The drive motor must be able to maintain a speed of 62.83 ± 2.62 rad/s (600 ± 25 r/min) under load.

6.5.1.1 The Sunbeam Mix Master® motor suggested in Fig. 1 may be replaced for heavier duty by another motor, such as the Bodine motor[12] with one shaft at motor speed and another

[11] Containers supplied by Canadian Laboratory Supplies Limited, Box 2090, Stn. St. Laurent, Montreal 307, P. Q., Canada, (Catalog No. J3028-14), are suitable. These must be fitted with suitable vanes.

[12] Catalog No. 134-1, distributed by Sepor Laboratory Supply, Box 4245, Long Beach, CA 90804, has been found suitable.

AVA Documents
Document Sharing Hub

Full document details: ASTM D3880-90(1999)

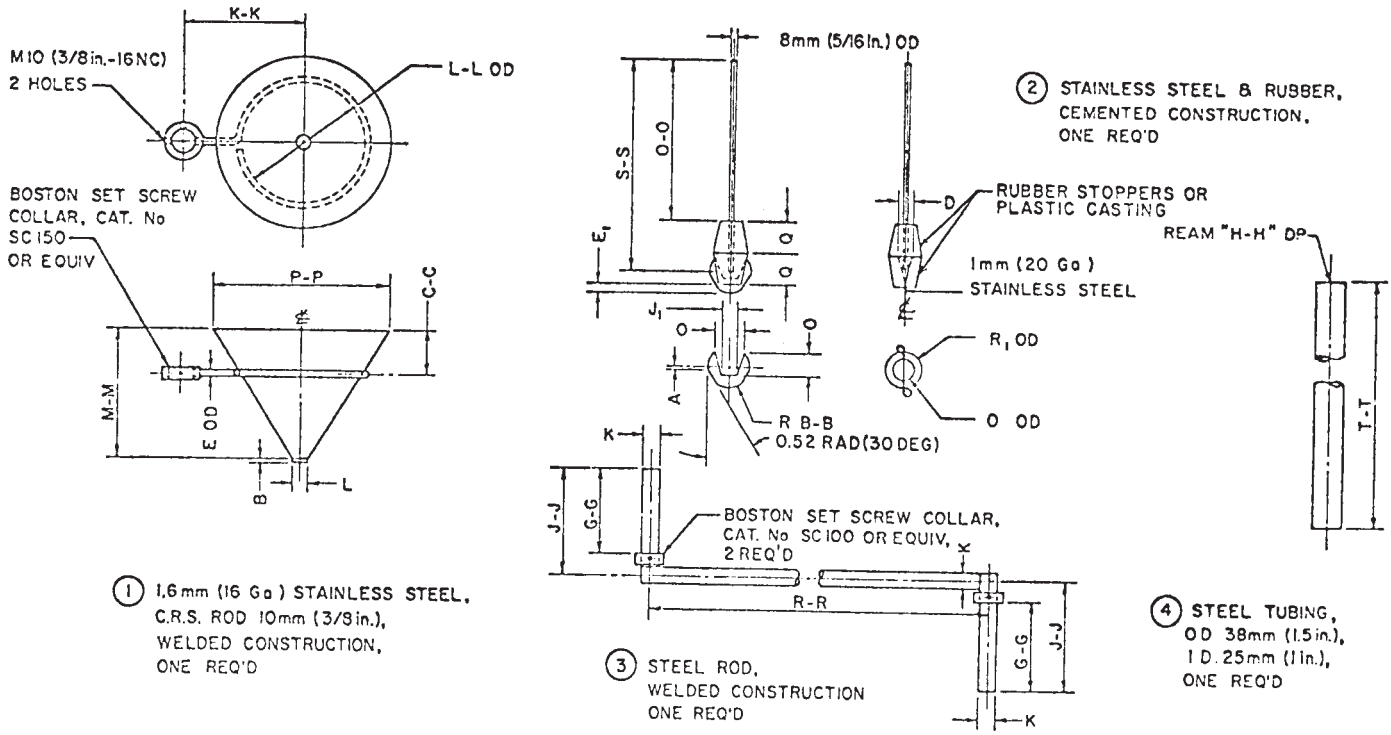

Dimension	mm (in.)	Dimension	mm (in.)	Dimension	mm (in.)
A	3.5 (1/8)	O	38 (1½)	K-K	165 (6½)
B	5 (3/16)	Q	46 (1 13/16)	L-L	170 (6 11/16)
D	18 (23/32)	R_1	48 (1 57/64)	M-M	180 (7 3/32)
E	10 (3/8)	B-B	62 (2 7/16)	O-O	230 (9)
E_1	10 (25/64)	C-C	63 (2½)	P-P	240 (9 7/16)
J_1	23 (29/32)	G-G	130 (5)	R-R	290 (11½)
K	25 (1)	H-H	155 (6)	S-S	310 (12)
L	28 (1 1/16)	J-J	160 (6¼)	T-T	420 (16½)

FIG. 2 Wet-Mixer Details

shaft driven through a right-angle gear with a speed reduction of 6:1 or 10:1. This motor may be operated with a rheostat speed control, but more satisfactory performance is achieved by means of an autotransformer.

6.5.1.2 The Bodine motor has an additional advantage. If a strobe card is mounted on the higher speed shaft while the impeller is mounted on the other shaft, then the strobe card (consisting of two black and two white alternating segments) will rotate at 377 rad/s (3600 r/min) when the impeller is at 62.8 rad/s (600 r/min), and the strobe card will appear stationary when illuminated with standard fluorescent lamps operating on 60 Hz alternating current. For the 10:1 speed reduction motors, mount the strobe card on the impeller shaft (the card will have 12 black and 12 white alternating segments in this case). This provides a simple, accurate speed indicator.

6.5.1.3 A modified motor mount for a Bodine motor (Part No. 7) is shown in Fig. 4.

6.5.2 *Impeller*:

6.5.2.1 A plastic casting may be substituted for the rubber stoppers which are called for in the design of the impeller (Fig. 2).

6.5.2.2 The impeller must rotate clockwise when looking from above, and the vanes must be pitched so as to impel the slurry downward.

6.5.2.3 Maximum clearance between the impeller and the conical wall of the wet mixer must be set at 6.3 mm (0.25 in.).

6.5.3 *Rubber Hoe*, as shown in Fig. 5.

6.6 *Pressing*:

6.6.1 *Semi-automatic Press*, [13] illustrated in Fig. 6, Fig. 7, and Fig. 8 capable of performing the following pressing cycle:

6.6.1.1 *Manual Control* (Refer to Fig. 6—Start with the toggle switch in the OFF position. If contact is maintained on the UP push button, or on the UP foot switch, the press will close. As it closes, the pressure will rise until it reaches a preselected value on the high-pressure relief valve. The press may be opened by pushing the DOWN button, which will open solenoid valve No. 2 and drop the ram, or by opening the manual dump valve.

6.6.1.2 *Automatic Control* (Refer to Fig. 6)—With the toggle switch OFF, timer No. 1 should be set to the required low pressure interval of 105 s. Timer No. 2 should be set for the required high pressure interval of 90 s. Put the toggle switch in the ON position. The cycle may be started by closing either the foot switch or the push button. The following events will

[13] Model PW22X, made by Pasadena Hydraulics, Inc., 14955 E. Salt Lake Ave., City of Industry, CA 91746, has been found suitable.

AVA Documents
Document Sharing Hub

Full document details: ASTM D3880-90(1999)

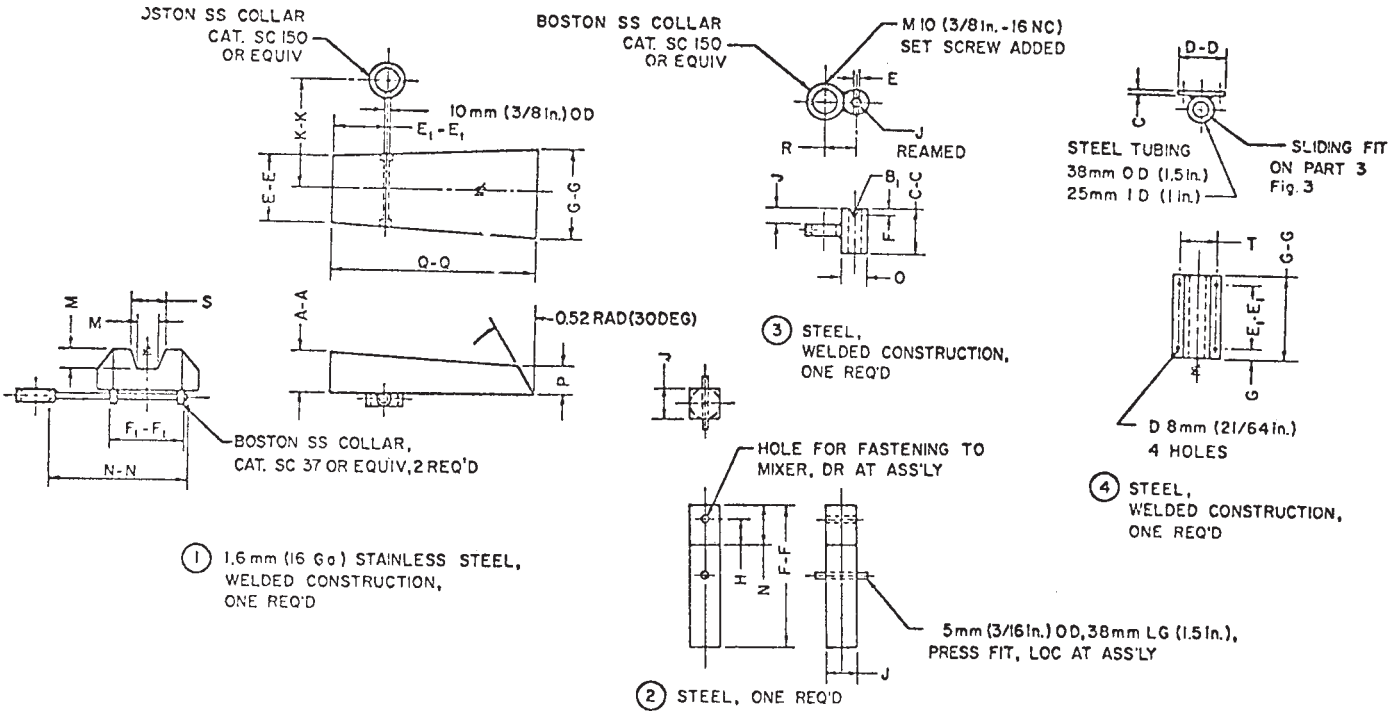

Dimension	mm (in.)	Dimension	mm (in.)	Dimension	mm (in.)
B_1	5 (3/16)	O	38 (1½)	E_1-E_1	100 (4)
C	6 (¼)	P	44 (1¾)	F_1-F_1	105 (4⅛)
E	10 (⅜)	R	48 (1⅞)	F-F	110 (4¼)
F	11 (7/16)	S	50 (1 31/32)	G-G	130 (5)
G	13 (½)	T	58 (2¼)	K-K	165 (6½)
H	20 (¾)	A-A	60 (2 23/64)	N-N	200 (8)
J	22 (⅞)	C-C	63 (2½)	Q-Q	250 (10)
M	30 (1 3/16)	D-D	78 (3)		
N	32 (1¼)	E-E	100 (3 15/16)		

FIG. 3 Additional Wet-Mixer Details

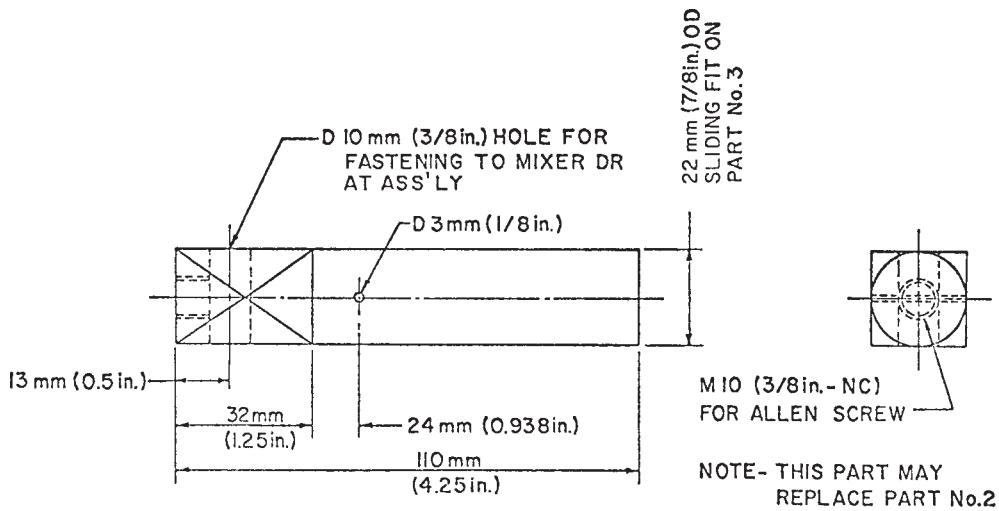

FIG. 4 Modified Motor Mount for Alternative Wet Mixer

occur: (*1*) The top limit switch will close at any required point in the ram travel, the pump will continue to run, and solenoid valve No. 1 will open; (*2*) When the press closes, pressure will rise to the value set on the low pressure relief valve; (*3*) After the preselected interval (105 s), timer No. 1 times out; (*4*) Timer No. 2 starts automatically Solenoid Valve No. 1 closes and pressure will rise at an adjustable rate to the value set on the high-pressure relief valve; (*5*) At the end of the interval selected on timer No. 2 (90 s), the motor stops and solenoid valve No. 2 opens, permitting the ram to lower and (*6*) A signal

AVA Documents
Document Sharing Hub

Full document details: ASTM D3880-90(1999)

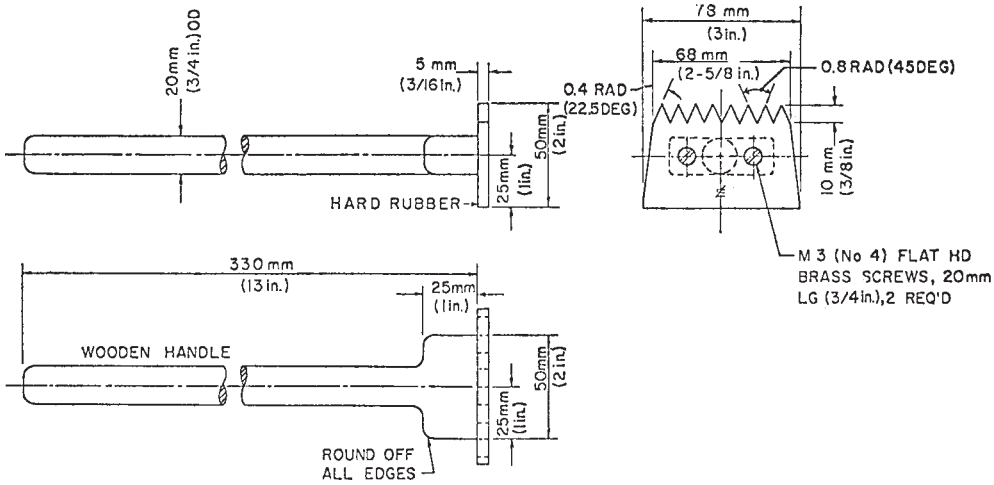

FIG. 5 Rubber Hoe

ram bottoms, the lower limit switch opens, causing the timers to reset preparatory to another cycle. The rate of pressure rise to the high-pressure relief valve setting may be controlled by adjusting the micrometer valve. This system will operate for some time without overheating but when continuous operation is planned, water should be circulated through the heat exchanger.

6.6.2 *Holding and Lowering Device*, for confining mold as described in Figs. 9-14, Fig. 7, and Fig. 8.

6.6.3 *Top Platen*, as described in Fig. 15, Fig. 16, Fig. 7, and Fig. 8.

6.6.4 *Confining Mold*, as described in Fig. 7, Fig. 8, Fig. 17, Fig. 18, and Fig. 19.

6.6.5 *Bottom Platen*, as described in Fig. 7, Fig. 8, and Fig. 20.

6.6.6 *Platen Base*, as described in Fig. 7, Fig. 8, Fig. 21, and Fig. 22.

6.6.7 *Phosphor Bronze or Stainless Steel Wire Screen*, corresponding to U.S. Sieve Series No. 40 described in Specification E 11. The screen must measure 240 mm (9.5 in.) in length by 130 mm (5 in.) wide.

NOTE 3—Bronze screening stretching beyond specifications as a result of the pressing operation should be replaced.

6.6.8 *Phosphor Bronze or Stainless Steel Wire Screening*, corresponding to U.S. Sieve Series No. 16 as described in Specification E 11. The screen must measure 240 mm (9.5 in.) long by 130 mm (5 in.) wide.

6.6.9 *Perforated Steel Plate*, measuring 240 mm (9.5 in.) long by 130 mm (5 in.) wide, and conforming to the following specifications:

Thickness	1.24 to 1.68 mm (0.049 to 0.066 in.)
Diameter of perforations	3.18 mm (0.125 in.) ± 5 %
Width of metal between holes	2.38 mm (3/32 in.)(0.09375 in.) ± 20 %
Pitch of holes	triangular (equilateral)

6.6.10 *Settling Tank*, 130 mm (5 in.) wide by 640 mm (25 in.) long by 500 mm (20 in.) deep, made of galvanized sheet steel, with an overflow drainage system.

6.6.11 *Asbestos Cement, Plastic, or Stainless Steel Plates*, measuring approximately 90 by 220 by 6 mm (3.5 by 8.5 by 0.25 in.). Ensure that the plates have not become bowed from previous usage nor become bowed under load while in use. See 9.8.2.1.

6.7 *Curing*:

6.7.1 *Humidity Cabinet*, capable of maintaining relative humidity between 90 and 100 % at room temperature (15 to 32°C) (60 to 90°F).

6.7.2 *Autoclave*, approximately 460 mm (18 in.) in internal diameter and 760 mm (30 in.) long, capable of maintaining 689.5 kPa (100 psig) gage pressure of saturated steam (not superheated) at 170°C (338°F) for a period of 20 h.

NOTE 4—**Warning:** The autoclave must be rated at a gage pressure higher than 689.5 kPa (100 psi) in order to permit this pressure to be maintained. Refer to local government regulations for pressure vessels prior to purchase and installation of an autoclave.

6.7.2.1 *Autoclave Trays*, steel plate, 610 by 355 by 6 mm (24 by 14 by 0.25 in.), with a handle at one end.

6.7.2.2 *Autoclave Baskets*, as described in Fig. 23.

6.7.2.3 *Asbestos-Cement Cover Sheets*, approximately 360 by 610 by 6 mm (14 by 24 by 0.25 in.).

6.7.3 *Saturating Tank*, large enough to saturate one day's production of test specimens, each measuring approximately 75 by 200 by 6 mm (3 by 8 by 0.25 in.). One press produces up to 90 test specimens each 8-h shift.

6.8 *Testing and Measuring*:

6.8.1 *Flexural Testing Machine*, capable of applying a load of 730 N at the rate of 5.88 ± 0.29 N/s. For testing machines with a constant rate of extension, as opposed to a constant rate of loading, these must be capable of extending at the rate of 0.1 mm/s (3.93×10^{-3} in./s). The dynamometer must read to 1 N (0.2 lbf) and must be equipped with a trailing needle or other mechanism to record maximum load attained on each test.

6.8.1.1 The specimen grips on the flexural tester must be of the third point loading type to apply the load equally and simultaneously to both third-points of the span, and the bearing edges of the loading bars must have a radius of 6.35 mm (0.25 in.) and must be free to rotate in a plane perpendicular to the test specimen and load direction.

AVA Documents
Document Sharing Hub

Full document details: ASTM D3880-90(1999)

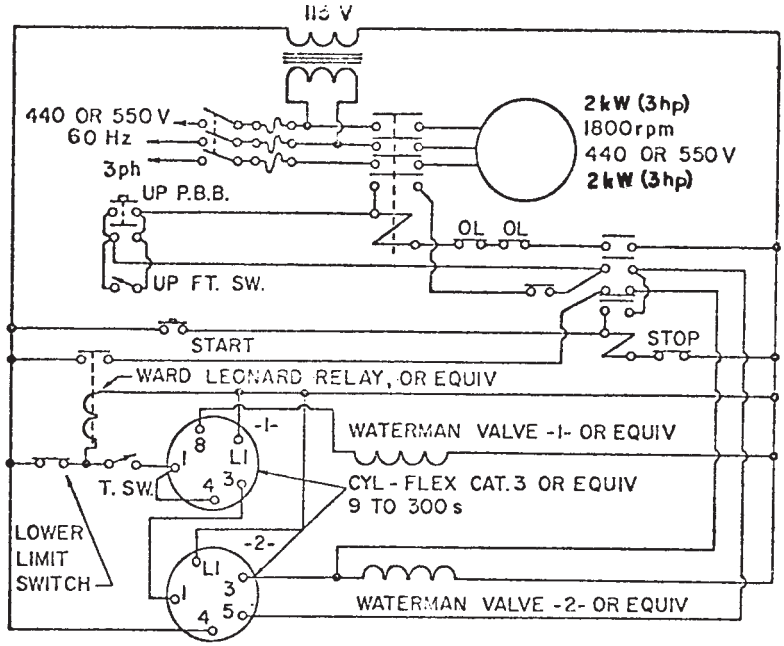

(a) ELECTRIC CONTROL CIRCUIT FOR MODIFIED P.H.I. PRESS

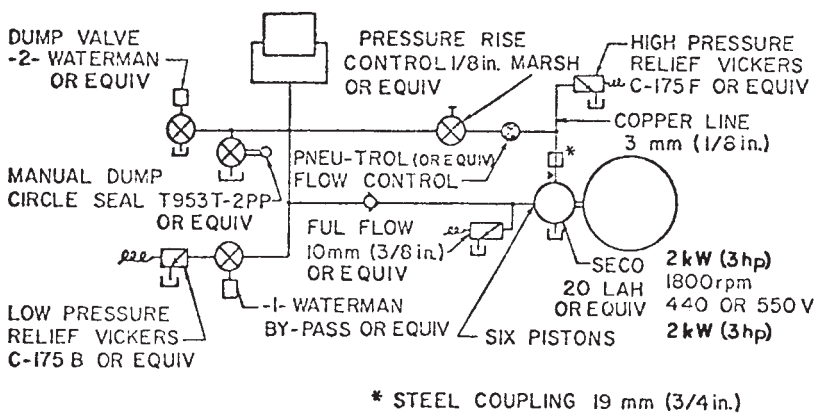

(b) HYDRAULIC CONTROL CIRCUIT

FIG. 6 Control Circuit for P.H.I. Press as Modified for F.S.U. Testing

6.8.2 *Micrometer*, 0 to 25 mm (0 to 1 in.) range, reading to 0.01 mm (5×10^{-4} in.). The micrometer spindle and anvil must be flat and must be either 6 mm or 0.25 in. nominal diameter.

6.8.3 *Drying Oven*, capable of maintaining a temperature of 105 to 110°C (220 to 230°F) and of sufficient size to hold one day's production of test specimens.

Documents
Document Sharing Hub
Full document details: ASTM D3880-90(1999)