NOTICE: This standard has either been superseded and replaced by a new version or withdrawn.
Contact ASTM International (www.astm.org) for the latest information

Designation: D4013 – 09

StandardPractice for Preparation of Test Specimens of Bituminous Mixtures by Means of Gyratory Shear Compactor[1]

This standard is issued under the fixed designation D4013; the number immediately following the designation indicates the year of original adoption or, in the case of revision, the year of last revision. A number in parentheses indicates the year of last reapproval. A superscript epsilon (ε) indicates an editorial change since the last revision or reapproval.

1. Scope

1.1 This practice covers the preparation of 4-in. (101.6 mm) diameter test specimens of bituminous mixtures containing –⅞-in. (–22.4-mm) aggregate.

1.2 The values stated in inch-pound units are to be regarded as standard. The values given in parentheses are mathematical conversions to SI units that are provided for information only and are not considered standard.

1.3 *This standard does not purport to address all of the safety concerns, if any, associated with its use. It is the responsibility of the user of this standard to establish appropriate safety and health practices and determine the applicability of regulatory limitations prior to use.*

2. Referenced Documents

2.1 *ASTM Standards:*[2]

E4 Practices for Force Verification of Testing Machines

3. Summary of Practice

3.1 This practice employs gyratory-shearing action of the mixture at low initial pressures, allowing orientation of the aggregate particles to aid compaction, and then nongyratory compression at high pressure for consolidation and shaping.

4. Significance and Use

4.1 The specimens are compacted to simulate the density, aggregate degradation, and structural characteristics possible in the actual road surface when proper construction procedure is used in the placement of the material. The specimens may be used to determine stability, density, strength, water susceptibility, etc., of bituminous mixtures by specified test methods.

5. Apparatus

5.1 *Gyratory-Shear Molding Press:*

5.1.1 *Press Platen,* which is hardened and ground flat.

5.1.2 *Hydraulic Compaction Ram,* with nonrotating metal face as shown in Fig. 1 and Fig. 2. The ram face is hardened and ground flat. The ram varies the vertical opening between the ram face and the press platen from 4.5 in. (114.3 mm) down to less than 1.0 in. (25.4 mm).

5.1.3 *Low-Pressure Gauge,* with automatic valve for high pressure protection and with a capability of indicating within ±2 kPa (±0.3 psi) the following: (See Note 1):

5.1.3.1 *Pregyration Stress*—31.8 psi (219 kPa) , which is 400 lbf (1779 N) total for diameter specimens.

5.1.3.2 *End Point Stress*—95.3 psi (657 kPa), which is 1200 lbf (5338 N) total for 4-in. (101.6-mm) diameter specimens.

5.1.4 *High-Pressure Gauge,* with capability of indicating within ±16 psi (±110 kPa) the following: (See Note 1):

5.1.4.1 *Consolidation Stress*—1590 psi (11.0 MPa), which is 20 000 lbf (89 kN) total for 4-in. (101.6-mm) diameter specimens.

5.1.5 *Tilt Mechanism,* to cock the mold 6° while the specimen is under pregyration stress (see 5.1.3.1). In reverse manner, it squares the mold axially against the press platen, with a smooth quick motion.

5.1.6 *Gyration Mechanism,* to move the mold about the ram face 12° total angle and produce gyratory shear compaction of the specimen. An electric motor drives the gyration mechanism at approximately 1 s/cycle.

5.1.7 *Count Mechanism,* to shut the gyration motor off after three complete cycles and to stop it in the loading position with an electric brake.

5.1.8 *Hydraulic Hand Pump,* which meters 0.020-in. (0.508-mm) ram movement, with a smooth quick motion.

5.2 *Gyratory Mold*—Rigid metal mold as shown in Fig. 1 and Fig. 3, with a concentric hardened ring for manipulating gyratory action, and hardened to at least 55 HRC honed and hard-plated interior.

5.3 *Base Plate*—Solid metal plate as shown in Fig. 1 and Fig. 2. Top and bottom surfaces are hardened and ground flat. (See Table 1 for a comparison of dimensions.)

5.4 *Wide-Mouth Funnel,* with mouth that fits inside mold.

[1] This practice is under the jurisdiction of ASTM Committee D04 on Road and Paving Materials and is the direct responsibility of Subcommittee D04.20 on Mechanical Tests of Bituminous Mixtures.

Current edition approved July 1, 2009. Published August 2009. Originally approved in 1981. Last previous edition approved in 2005 as D4013 – 98 (2005). DOI: 10.1520/D4013-09.

[2] For referenced ASTM standards, visit the ASTM website, www.astm.org, or contact ASTM Customer Service at service@astm.org. For *Annual Book of ASTM Standards* volume information, refer to the standard's Document Summary page on the ASTM website.

Copyright © ASTM International, 100 Barr Harbor Drive, PO Box C700, West Conshohocken, PA 19428-2959. United States

Documents
Document Sharing Hub
Full document details: ASTM D4013-09

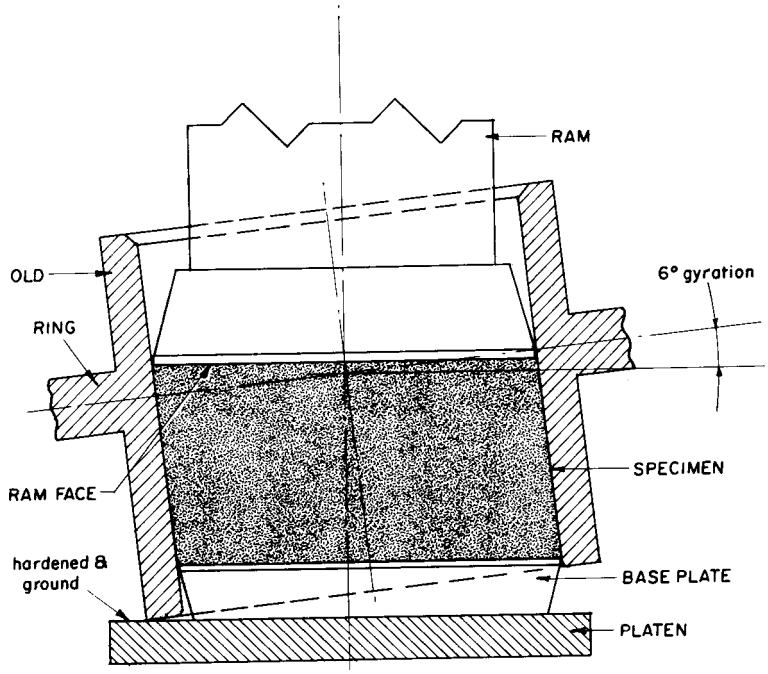

FIG. 1 Mold Assembly

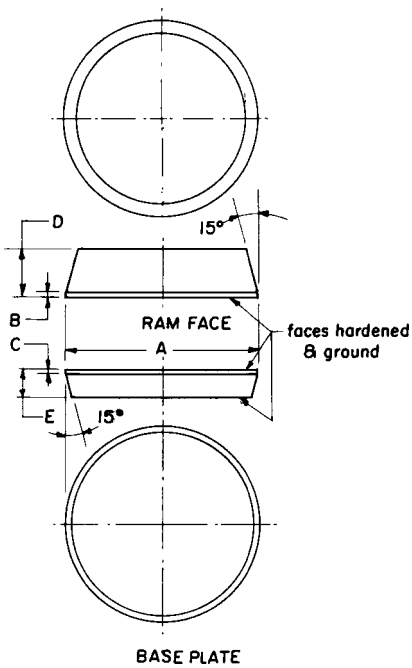

FIG. 2 Ram Face and Base Plate

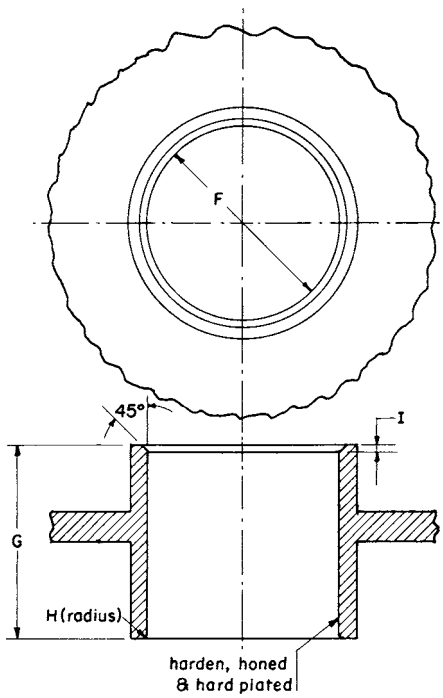

FIG. 3 Mold

5.5 *Scale or Balance,* having at least 4500-g capacity, sensitive to 0.1 g.

5.6 *Sieve or Screen*—A 1-in. (25-mm) screen or ⅞-in. (22.4-mm) sieve.

5.7 *Spatula*—A flexible spatula having a blade about 4 in. (101.6 mm) long and ¾ in. (19.1 mm) wide.

5.8 *Spoon*—A large spoon with a right angle bend between the bowl and handle.

5.9 *Measuring Device*—A micrometer dial assembly or calipers for determining the height of the specimens is suitable for this purpose.

5.10 *Specimen Extrusion Device*—A rigid right cylinder, having a minimum height of 4 ½ in. (114.3 mm), and a diameter of approximately 3 ⅞ in. (98.4 mm) to be used as a pedestal with a converted arbor press or some similar device. Other methods of specimen extrusion that do not damage the specimen may be used.

AVA Documents
Document Sharing Hub

Full document details: ASTM D4013-09