This international standard was developed in accordance with internationally recognized principles on standardization established in the Decision on Principles for the Development of International Standards, Guides and Recommendations issued by the World Trade Organization Technical Barriers to Trade (TBT) Committee.

Designation: D4057 – 22

Manual of Petroleum Measurement Standards (MPMS), Chapter 8.1

Standard Practice for Manual Sampling of Petroleum and Petroleum Products[1]

This standard is issued under the fixed designation D4057; the number immediately following the designation indicates the year of original adoption or, in the case of revision, the year of last revision. A number in parentheses indicates the year of last reapproval. A superscript epsilon (ε) indicates an editorial change since the last revision or reapproval.

This standard has been approved for use by agencies of the U.S. Department of Defense.

INTRODUCTION

The previous version of the manual sampling practice described the various sampling methods and apparatus, with much focus on crude oils and semi-solids and solids. Also, previous versions did not significantly address closed or restricted sampling, which continue to become more prevalent.

This version will provide guidance on manual sampling terminology, concepts, equipment, containers, procedures, and will provide some specific guidance related to particular products and tests. The type and size of the sample obtained, and the handling method, will depend on the purpose for which it was taken. Refer to the test method for any specific sampling and handling requirements up to the point of testing. It remains the responsibility of the subcommittee for the relevant test method to provide guidance, or warnings, regarding sample container selection; preparation; cleanliness; heat, pressure, or light; sample size requirements for testing and retention; and any other special handling requirements necessary to ensure a representative sample is tested.

In addition to the individual test method, for guidance on container, size, mixing and special handling, further guidance may be provided in Practice D5854 (API *MPMS* Chapter 8.3), Practice D5842 (API *MPMS* Chapter 8.4), and Practice D4306. While this practice will provide some general guidance regarding sample chain of custody, Guide D4840 should also be consulted.

This document has been developed jointly between the American Petroleum Institute (API) and ASTM International.

1. Scope*

1.1 This practice covers procedures and equipment for manually obtaining samples of liquid petroleum and petroleum products, crude oils, and intermediate products from the sample point into the primary container are described. Procedures are also included for the sampling of free water and other heavy components associated with petroleum and petroleum products.

1.2 This practice also addresses the sampling of semi-liquid or solid-state petroleum products. For the sampling of green petroleum coke, see Practice D8145. For the sampling of calcined petroleum coke, see Practice D6970.

1.3 This practice provides additional specific information about sample container selection, preparation, and sample handling.

1.4 This practice does not cover sampling of electrical insulating oils and hydraulic fluids. If sampling is for the precise determination of volatility, use Practice D5842 (API *MPMS* Chapter 8.4) in conjunction with this practice. For sample mixing and handling, refer to Practice D5854 (API *MPMS* Chapter 8.3).

1.5 The procedures described in this practice may also be applicable in sampling most non-corrosive liquid industrial chemicals provided that all safety precautions specific to these chemicals are followed. Also, refer to Practice E300. The procedures described in this practice are also applicable to sampling liquefied petroleum gases and chemicals. Also refer to Practices D1265 and D3700. The procedure for sampling bituminous materials is described in Practice D140. Practice

[1] This practice is under the jurisdiction of ASTM Committee D02 on Petroleum Products, Liquid Fuels, and Lubricants and the API Committee on Petroleum Measurement, and is the direct responsibility of Subcommittee D02.02 /COMQ the joint ASTM-API Committee on Hydrocarbon Measurement for Custody Transfer (Joint ASTM-API). This practice has been approved by the sponsoring committees and accepted by the Cooperating Societies in accordance with established procedures. This practice was issued as a joint ASTM-API standard in 1981.

Current edition approved May 1, 2022. Published June 2022. Originally approved in 1981. Last previous edition approved in 2019 as D4057 – 19. DOI: 10.1520/D4057-22.

*A Summary of Changes section appears at the end of this standard

© Jointly copyrighted by ASTM International, 100 Barr Harbor Drive, PO Box C700, West Conshohocken, PA 19428-2959, USA and the American Petroleum Institute (API), 1220 L Street, NW, Washington DC 20005–USA

Documents Document Sharing Hub

Full document details: ASTM D4057-22

D4306 provides guidance on sample containers and preparation for sampling aviation fuel.

1.6 *Units*—The values stated in SI units are to be regarded as the standard. USC units are reflected in parentheses.

1.7 *This standard does not purport to address all of the safety concerns, if any, associated with its use. It is the responsibility of the user of this standard to establish appropriate safety, health, and environmental practices and determine the applicability of regulatory limitations prior to use.*

1.8 *This international standard was developed in accordance with internationally recognized principles on standardization established in the Decision on Principles for the Development of International Standards, Guides and Recommendations issued by the World Trade Organization Technical Barriers to Trade (TBT) Committee.*

2. Referenced Documents

2.1 *ASTM Standards:*[2]

D86 Test Method for Distillation of Petroleum Products and Liquid Fuels at Atmospheric Pressure
D97 Test Method for Pour Point of Petroleum Products
D140 Practice for Sampling Asphalt Materials
D217 Test Methods for Cone Penetration of Lubricating Grease
D244 Test Methods and Practices for Emulsified Asphalts
D268 Guide for Sampling and Testing Volatile Solvents and Chemical Intermediates for Use in Paint and Related Coatings and Material
D287 Test Method for API Gravity of Crude Petroleum and Petroleum Products (Hydrometer Method)
D323 Test Method for Vapor Pressure of Petroleum Products (Reid Method)
D445 Test Method for Kinematic Viscosity of Transparent and Opaque Liquids (and Calculation of Dynamic Viscosity)
D473 Test Method for Sediment in Crude Oils and Fuel Oils by the Extraction Method (API *MPMS* Chapter 10.1)
D664 Test Method for Acid Number of Petroleum Products by Potentiometric Titration
D977 Specification for Emulsified Asphalt
D1265 Practice for Sampling Liquefied Petroleum (LP) Gases, Manual Method
D1267 Test Method for Gauge Vapor Pressure of Liquefied Petroleum (LP) Gases (LP-Gas Method)
D1298 Test Method for Density, Relative Density, or API Gravity of Crude Petroleum and Liquid Petroleum Products by Hydrometer Method (API *MPMS* Chapter 9.1)
D1657 Test Method for Density or Relative Density of Light Hydrocarbons by Pressure Hydrometer (API *MPMS* Chapter 9.2)
D1838 Test Method for Copper Strip Corrosion by Liquefied Petroleum (LP) Gases
D1856 Test Method for Recovery of Asphalt from Solution by Abson Method
D2172 Test Methods for Quantitative Extraction of Asphalt Binder from Asphalt Mixtures
D2622 Test Method for Sulfur in Petroleum Products by Wavelength Dispersive X-ray Fluorescence Spectrometry
D3230 Test Method for Salts in Crude Oil (Electrometric Method)
D3700 Practice for Obtaining LPG Samples Using a Floating Piston Cylinder
D4006 Test Method for Water in Crude Oil by Distillation (API *MPMS*Chapter 10.2)
D4007 Test Method for Water and Sediment in Crude Oil by the Centrifuge Method (Laboratory Procedure) (API *MPMS* Chapter 10.3)
D4175 Terminology Relating to Petroleum Products, Liquid Fuels, and Lubricants
D4177 Practice for Automatic Sampling of Petroleum and Petroleum Products (API *MPMS* Chapter 8.2)
D4294 Test Method for Sulfur in Petroleum and Petroleum Products by Energy Dispersive X-ray Fluorescence Spectrometry
D4306 Practice for Aviation Fuel Sample Containers for Tests Affected by Trace Contamination
D4377 Test Method for Water in Crude Oils by Potentiometric Karl Fischer Titration (API *MPMS* Chapter 10.7)
D4530 Test Method for Determination of Carbon Residue (Micro Method)
D4629 Test Method for Trace Nitrogen in Liquid Hydrocarbons by Syringe/Inlet Oxidative Combustion and Chemiluminescence Detection
D4807 Test Method for Sediment in Crude Oil by Membrane Filtration (API *MPMS* Chapter 10.8)
D4840 Guide for Sample Chain-of-Custody Procedures
D4928 Test Method for Water in Crude Oils by Coulometric Karl Fischer Titration (API *MPMS* Chapter 10.9)
D4929 Test Method for Determination of Organic Chloride Content in Crude Oil
D5002 Test Method for Density, Relative Density, and API Gravity of Crude Oils by Digital Density Analyzer
D5191 Test Method for Vapor Pressure of Petroleum Products and Liquid Fuels (Mini Method)
D5762 Test Method for Nitrogen in Liquid Hydrocarbons, Petroleum and Petroleum Products by Boat-Inlet Chemiluminescence
D5842 Practice for Sampling and Handling of Fuels for Volatility Measurement (API *MPMS* Chapter 8.4)
D5853 Test Method for Pour Point of Crude Oils
D5854 Practice for Mixing and Handling of Liquid Samples of Petroleum and Petroleum Products (API *MPMS* Chapter 8.3)
D5863 Test Methods for Determination of Nickel, Vanadium, Iron, and Sodium in Crude Oils and Residual Fuels by Flame Atomic Absorption Spectrometry
D6299 Practice for Applying Statistical Quality Assurance and Control Charting Techniques to Evaluate Analytical Measurement System Performance
D6377 Test Method for Determination of Vapor Pressure of Crude Oil: $VPCR_x$ (Expansion Method)

[2] For referenced ASTM standards, visit the ASTM website, www.astm.org, or contact ASTM Customer Service at service@astm.org. For *Annual Book of ASTM Standards* volume information, refer to the standard's Document Summary page on the ASTM website.

AVA Documents
Document Sharing Hub

Full document details: ASTM D4057-22

D6378 Test Method for Determination of Vapor Pressure (VP_X) of Petroleum Products, Hydrocarbons, and Hydrocarbon-Oxygenate Mixtures (Triple Expansion Method)
D6470 Test Method for Salt in Crude Oils (Potentiometric Method)
D6560 Test Method for Determination of Asphaltenes (Heptane Insolubles) in Crude Petroleum and Petroleum Products
D6822 Test Method for Density, Relative Density, and API Gravity of Crude Petroleum and Liquid Petroleum Products by Thermohydrometer Method (API *MPMS* Chapter 9.3)
D6849 Practice for Storage and Use of Liquefied Petroleum Gases (LPG) in Sample Cylinders for LPG Test Methods
D6970 Practice for Collection of Calcined Petroleum Coke Samples for Analysis
D7169 Test Method for Boiling Point Distribution of Samples with Residues Such as Crude Oils and Atmospheric and Vacuum Residues by High Temperature Gas Chromatography
D7975 Test Method for Determination of Vapor Pressure of Crude Oil: $VPCR_x$-F(Tm°C) (Manual Expansion Field Method)
D8009 Practice for Manual Piston Cylinder Sampling for Volatile Crude Oils, Condensates, and Liquid Petroleum Products (API *MPMS* Chapter 8.5)
D8145 Practice for Sampling of Green Petroleum Coke
E300 Practice for Sampling Industrial Chemicals
E882 Guide for Accountability and Quality Control in the Chemical Analysis Laboratory

2.2 *API Manual of Petroleum Measurement Standards:*[3]
MPMS Chapter 1 Vocabulary
MPMS Chapter 8.2 Automatic Sampling of Petroleum and Petroleum Products (ASTM Practice D4177)
MPMS Chapter 8.3 Standard Practice for Mixing and Handling of Liquid Samples of Petroleum and Petroleum Products (ASTM Practice D5854)
*MPMS*Chapter 8.4 Standard Practice for the Sampling and Handling of Fuels for Volatility Measurements (ASTM Practice D5842)
MPMS Chapter 8.5 Standard Practice Manual Piston Cylinders (ASTM Practice D8009)
*MPMS*Chapter 9.1 Standard Test Method for Density, Relative Density (Specific Gravity), or API Gravity of Crude Petroleum and Liquid Petroleum (ASTM Test Method D1298)
*MPMS*Chapter 9.2 Standard Test Method for Density or Relative Density of Light Hydrocarbons by Pressure Hydrometer (ASTM Test Method D1657)
MPMS Chapter 9.3 Standard Test Method for Density, Relative Density, and API Gravity of Crude Petroleum and Liquid Petroleum Products by Thermohydrometer Method (ASTM Test Method D6822)
MPMS Chapter 10.1 Standard Test Method for Sediment in Crude Oils and Fuel Oils by the Extraction Method (ASTM Test Method D473)
MPMS Chapter 10.2 Standard Test Method for Water in Crude Oil by Distillation (ASTM Test Method D4006)
MPMS Chapter 10.3 Standard Test Method for Water and Sediment in Crude Oil by the Centrifuge Method (Laboratory Procedure) (ASTM Test Method D4007)
MPMS Chapter 10.4 Standard Test Method for Water and Sediment in Crude Oil by the Centrifuge Method (Laboratory Procedure)
MPMS Chapter 10.7 Standard Test Method for Water in Crude Oils by Potentiometric Karl Fischer Titration (ASTM Test Method D4377)
MPMS Chapter 10.8 Standard Test Method for Water in Crude Oils by Potentiometric Karl Fischer Titration (ASTM Test Method D4807)
MPMS Chapter 10.9 Standard Test Method for Water in Crude Oils by Coulometric Karl Fischer Titration (ASTM Test Method D4928)
MPMS Chapter 14.6 Pressure Pycnometer
MPMS Chapter 17.1 Guidelines for Marine Cargo Inspection
MPMS Chapter 17.2 Measurement of Cargoes Aboard Marine Tank Vessels
*MPMS*Chapter 18.1 Measurement Procedures for Crude Oil Gathered from Small Tanks By Truck

2.3 *Gas Processors Association (GPA) Standards:*[4]
GPA S 2174 Obtaining Liquid Hydrocarbon Samples for Analysis by Gas Chromatograph

2.4 *Other Publications:*
UOP163 Hydrogen Sulfide and Mercaptan Sulfur in Liquid Hydrocarbons by Potentiometric Titration[5]
49 CFR 173 Shippers—General Requirements for Shipments and Packagings[6]

3. Terminology

3.1 *Definitions:*

3.1.1 For definitions of terms used in this practice, refer to Terminology D4175 and API *MPMS* Chapter 1.

3.1.2 *assay, n*—the procedure to determine the presence, absence, or quantity of one or more components.

3.1.3 *automatic sampler, n*—a device used to extract a representative sample from the liquid flowing in a pipe; the automatic sampler generally consists of a probe, a sample extractor, an associated controller, a flow measuring device, and a sample receiver.

3.1.4 *bubble point, n*—the pressure at which the first bubble of vapor forms is the bubble point when the pressure is lowered on a liquid held at a constant temperature.

3.1.4.1 *Discussion*—Bubble point pressures are higher at high temperatures.

[3] Available from American Petroleum Institute (API), 1220 L. St., NW, Washington, DC 20005-4070, http://www.api.org.

[4] Available from Gas Processors Association (GPA), 6526 E. 60th St., Tulsa, OK 74145, http://www.gasprocessors.com.

[5] Available from ASTM International. Visit the ASTM website, www.astm.org, or contact ASTM Customer Service at service@astm.org.

[6] Available from U.S. Government Printing Office Superintendent of Documents, 732 N. Capitol St., NW, Mail Stop: SDE, Washington, DC 20401, http://www.access.gpo.gov.

AVA Documents
Document Sharing Hub

Full document details: ASTM D4057-22

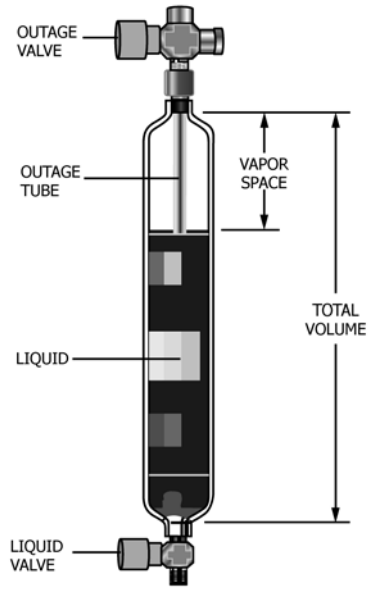

FIG. 1 Example of a Fixed Volume Cylinder with an Outage Tube

3.1.5 *dead crude oil, n*—crude oil with sufficiently low vapor pressure that, when exposed to normal atmospheric pressure at room temperature, does not result in boiling of the sample.

3.1.5.1 *Discussion*—These crudes will have vapor pressures below atmospheric pressure at room temperature.

3.1.6 *density, n*—for a quantity of a homogeneous substance, the ratio of its mass to its volume. The density varies as the temperature changes and is, therefore, generally expressed as the mass per unit of volume at a specified temperature.

3.1.7 *dissolved water, n*—water in solution in petroleum and petroleum products.

3.1.8 *emulsion, n*—a suspension of fine particles or globules, or both, of one or more liquids in another liquid.

3.1.9 *entrained water, n*—water suspended in the petroleum and petroleum products. Entrained water includes emulsions but does not include dissolved water.

3.1.10 *flash point, n—in petroleum products*, the lowest temperature corrected to a barometric pressure of 101.3 kPa (760 mm Hg), at which application of an ignition source causes the vapors of a specimen of the sample to ignite under specified conditions of test.

3.1.11 *floating piston (variable volume) cylinder (FPC), n*—a high pressure sample container, with a free floating internal piston that effectively divides the container into two separate compartments.

3.1.12 *free water, n*—water that exists as a separate phase.

3.1.13 *high pressure cylinder, n*—a receptacle used for storage and transportation of a sample obtained at pressures above atmospheric pressure.

3.1.14 *homogeneity, n*—uniformity of the characteristics of a material throughout a defined area or space.

3.1.15 *homogeneous, adj*—quality of being uniform with respect to composition, a specified property or a constituent throughout a defined area or space. **D4177**

3.1.16 *inert gas, n*—a gas that does not react with its surroundings.

3.1.17 *inerting, v*—a procedure used to reduce the oxygen content of the vapor spaces by introducing an inert gas such as nitrogen or carbon dioxide or a mixture of gases such as processed flue gas.

3.1.18 *intermediate sample container, n*—a container into which all or part of the sample from a primary container (receiver) is transferred for transport, storage, or ease of handling.

3.1.19 *live crude oil, n*—crude oil with sufficiently high vapor pressure that it would boil off if exposed to normal atmospheric pressure at room temperature.

3.1.20 *maximum fill density (reduced fill density), n*—the volume of a container occupied by the sample, usually expressed as a percentage of the total capacity. Transportation legislation such as U.S. CFR 49, Canadian Transportation of Dangerous Goods Regulations, and IATA regulations limit the percent fill of containers used for shipping LPG and may quote this requirement as a reduced fill density or maximum fill density (normally 80 % maximum liquid fill at 15 °C). Lower percent fill (lower fill density) may be required if sampling at lower temperatures.

3.1.21 *on-board quantity (OBQ), n*—the material present in a vessel's cargo tanks, void spaces, and pipelines before the vessel is loaded. On-board quantity may include any combination of water, oil, slops, oil residue, oil/water emulsion, and sediment.

3.1.22 *outage tube (internal), n*—a "cut to length" tube placed inside of the cylinder used as a way to remove excess

AVA Documents
Document Sharing Hub

Full document details: ASTM D4057-22

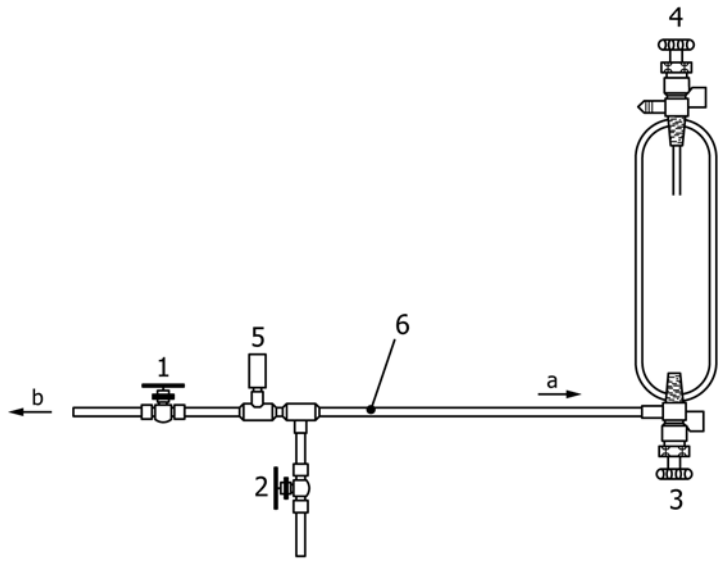

Key

1 sample point control valve
2 vent / purge valve
3 liquid valve cylinder inlet
4 outage valve
5 pressure relief
6 tubing
a To liquid valve cylinder inlet
b Product source

FIG. 2 Example of a Fixed Volume Cylinder and Transfer Line

sample from the cylinder via manual evacuation after the sample cylinder assembly is removed from the sample point. Refer to Fig. 1 and Fig. 2.

3.1.23 *portable manual sampling unit, PSU, n*—an intrinsically safe device used in conjunction with a vapor control valve to obtain required cargo samples under closed or restricted system conditions. Refer to Fig. 3 and Fig. 4.

3.1.24 *primary sample container, n*—a container in which a sample is initially collected.

3.1.24.1 *Discussion*—Examples of primary sample containers include glass and plastic bottles, cans, core-type thief, and fixed and portable sample containers (receivers).

3.1.25 *remaining on board, ROB, n*—the material remaining in a vessel's cargo tanks, void spaces, and pipelines after the cargo is discharged. Remaining on board quantity may include any combination of water, oil, slops, oil residue, oil/water emulsions, and sediment.

3.1.26 *sample, n*—a portion extracted from a total volume that may or may not contain the constituents in the same proportions that are present in that total volume.

3.1.27 *sample loop (fast loop or slip stream), n*—a low volume bypass diverted from the main pipeline.

3.1.28 *sampling, v*—the steps or procedures required to obtain a sample, which is a portion of the contents of any pipe, tank, or other vessel, and to place that sample in a container from which a test specimen or aliquot can be analyzed.

3.1.28.1 *Discussion*—The act of sampling or obtaining a sample may or may not be representative of the contents of the whole or total volume of product. See also 3.1.26 and 3.3.19.

3.1.29 *slip tube, n*—a graduated hollow rod fitted into a gas-tight housing, the lower end of which is open to the cargo's contents and the upper end is fitted with a valve.

3.1.30 *standpipes, n*—the vertical sections of pipe or tubing used for gauging extending from the gauging platform to near the bottom of tanks that are equipped with external or internal floating roofs. Standpipes may also be found on marine vessels. Standpipes are also known as "stilling wells" or "gauge wells." Standpipes without slots do not allow the free flow of product through the standpipe, and are known as solid or unslotted standpipes.

3.1.31 *ullage (outage), n*—the volume of available space in a container unoccupied by contents.

3.1.32 *vapor control valve, VCV, n*—a valve fitted on a standpipe, expansion trunk, or the deck that permits use of the portable handheld gauging/sampling instruments while restricting the release of vapors into the atmosphere.

3.1.33 *vapor pressure, n*—the pressure exerted by the vapor of a liquid when in equilibrium with the liquid.

3.1.33.1 *Reid vapor pressure, RVP, n*—resultant total pressure reading, corrected for measuring error, of a specific empirical test method (Test Method D323) for measuring the vapor pressure of gasoline and other volatile crude

AVA Documents
Document Sharing Hub

Full document details: ASTM D4057-22

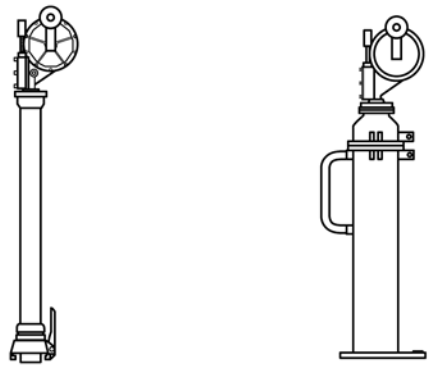

FIG. 3 Examples of a Small Volume (5 cm (2 in.)) and a Large Volume PSU (10 cm (4 in.))

FIG. 4 Examples of Closed/Restricted Sampling Equipment

3.1.33.2 *true vapor pressure, TVP, n*—the pressure at which the fluid is in equilibrium between its liquid and gas state.

3.2 *Definitions of Terms Specific to This Standard:*

3.2.1 *LPG (liquefied petroleum gas), n*—narrow boiling range hydrocarbon mixtures consisting mainly of propane or propylene, or both, and butanes or butylenes, or both, plus limited amounts of other hydrocarbons and naturally-occurring non-hydrocarbons.

3.2.2 *non-homogeneous, adj*—quality of not being uniform with respect to composition, a specified property or a constituent throughout a defined area or space.

3.2.3 *rinse, v*—the act of introducing material into a container for a purpose and discarding material before collecting a sample in the same container.

3.2.3.1 *Discussion*—Reasons for rinsing may include purposes such as removal of potential contaminants from the container, pre-load the container with hydrocarbon vapors, acclimate container temperature to that of the sample if needed, as well as other purposes.

3.3 *Definitions of Sample Types:*

3.3.1 *all-levels sample, n*—a sample obtained by lowering the closed sampling device to the bottom of the outlet suction level, but always above free water, then opening the sampler and raising it at a uniform rate such that it is between 70 % and 85 % full when withdrawn from the product. Alternatively, all-levels samples may be taken with samplers designed for filling as they pass downward through the product.

3.3.1.1 *Discussion*—If required by the test method, the sampler may be greater than 85 % full when withdrawn but in no case shall it be completely full. In these cases, take special handling precautions to consider the hazards associated with product thermal expansion.

3.3.2 *boring sample, n*—a sample of the material contained in a barrel, case, bag, or cake that is obtained from the chips created by boring holes into the material with a ship auger.

3.3.3 *bottom sample, n*—a spot sample collected from the material at the bottom of the tank, container, or line at its lowest point. In practice, the term bottom sample has a variety of meanings. As a result, it is recommended that the exact sampling location (for example 15 cm (6 in.) from the bottom) should be specified when using this term. See Fig. 5.

3.3.4 *bottom water sample, n*—a spot sample of free water taken from beneath the petroleum contained in a ship or barge compartment or a storage tank.

3.3.5 *clearance sample, n*—a spot sample taken with the inlet opening of the sampling device 10 cm (4 in.) (some regulatory agencies require 15 cm (6 in.)) below the bottom of the tank outlet. This term is normally associated with small (159 m^3 (1000 barrels) or less) tanks, commonly referred to as lease tanks.

3.3.6 *composite sample, n*—a sample prepared by combining a number of samples and treated as a single sample. Also refer to "tank composite sample," "volumetric composite sample," "deck composite sample," and "multiple tank composite sample" definitions.

AVA Documents
Document Sharing Hub

Full document details: ASTM D4057-22

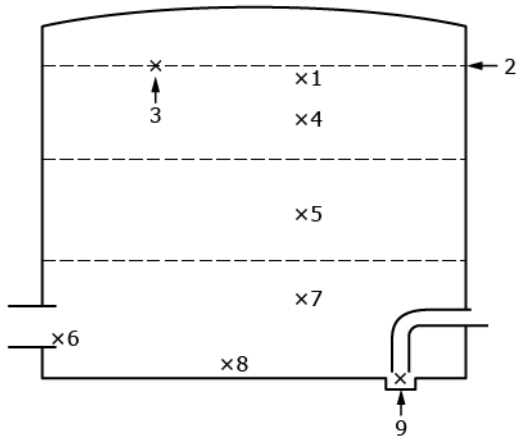

Key

1	Top sample	6	Suction level or outlet samples
2	Surface of product	7	Lower sample
3	Skim sample	8	Bottom sample
4	Upper sample	9	Sump sample
5	Middle sample		

FIG. 5 Illustration of Common Spot Sample Positions

3.3.7 *core sample, n*—a sample of uniform cross-sectional area taken at a given height in a tank.

3.3.8 *dead bottom sample, n*—a sample obtained from the lowest accessible point in a tank. This is typically directly from the floor (or datum plate) of the shore tank or the bottom of the vessel compartment.

3.3.9 *deck composite sample*, n—a sample typically made by compositing a portion of each sample obtained from all vessel compartments containing a particular product grade.

3.3.10 *dipper sample, n*—a sample obtained by placing a dipper or other collecting vessel in the path of a free-flowing stream to collect a definite volume from the full cross section of the stream at regular time intervals for a constant time rate of flow or at time intervals varied in proportion to the flow rate.

3.3.11 *drain sample, n*—a sample obtained from the water draw-off valve on a storage tank vessel or container. Occasionally, a drain sample may be the same as a bottom sample (for example, in the case of a tank car).

3.3.12 *floating roof sample, n*—a spot sample taken just below the surface to determine the density (API gravity) of the liquid on which the roof is floating.

3.3.13 *grab sample, n—liquid*—a sample collected at a specific location in a tank or from a flowing stream in a pipe at a specific time.

3.3.14 *grease sample, n*—obtained by scooping or dipping a quantity of soft or semi-liquid material contained from a package in a representative manner.

3.3.15 *loading zone sample, n*—a sample taken from a tank prior to commencement of a transfer, intended to represent only the product expected to be transferred.

3.3.16 *lower sample, n*—a spot sample of liquid from the middle of the lower one-third of the tank's content (a distance of five-sixths of the depth liquid below the liquid's surface). See Fig. 5.

3.3.16.1 *Discussion*—For tap sampling, the tap is often not in the middle of the lower layer. It is typically near the level of the main tank outlet as referenced in 7.7.2. While it is not in the exact middle of the lower one-third of the tank's content, it should still yield a sample representative of the lower layer.

3.3.17 *middle sample, n*—a spot sample taken from the middle of a tank's contents (a distance of one half of the depth of liquid below the liquid's surface). See Fig. 5.

3.3.17.1 *Discussion*—For tap sampling, the tap is often not in the middle of the middle layer. Use the available tap closest to the middle of the middle layer. While it is not in the exact middle of the middle one-third of the tank's content, it should still yield a sample representative of the middle layer.

3.3.18 *multiple tank composite sample, n*—a mixture of individual samples or composites of samples that have been obtained from several tanks or ship/barge compartments containing the same grade of material. The mixture is blended typically in proportion to the volume of material contained in the respective tanks or compartments.

3.3.19 *representative sample, n*—a portion extracted from the total volume that contains the constituents in the same proportions that are present in that total volume.

3.3.20 *running sample, n*—a sample obtained by lowering an open sampling device to the bottom of the outlet suction level, but always above free water, and returning it to the top of the product at a uniform rate such that the sampling device is between 70 % and 85 % full when withdrawn from the product.

3.3.20.1 *Discussion*—If required by the test method, the sampler may be greater than 85 % full when withdrawn but in no case shall it be completely full. In these cases, take special handling precautions to consider the hazards associated with product thermal expansion.

3.3.21 *spot sample, n*—a sample taken at a specific location in a tank or from a flowing stream in a pipe at a specific time.

3.3.22 *suction sample (outlet), n*—a spot sample taken at the lowest level from which product is expected to be pumped from the tank; see Fig. 5.

3.3.23 *sump sample, n*—spot sample taken from within the tank or vessel compartment sump; see Fig. 5.

3.3.24 *surface sample (skim sample), n*—a spot sample skimmed from the surface of a liquid in a tank. See Fig. 5.

3.3.25 *tank composite sample, n*—a blend created from a single tank, as an example combining the upper, middle, and lower samples. For a tank of uniform cross section, such as an upright cylindrical tank, the blend consists of equal parts of the three samples. A combination of other samples may also be used, such as running, all-levels or additional spot samples. For a horizontal cylindrical tank, the blend consists of samples in the proportions shown in Table 1.

3.3.26 *tank tap sample, n*—a spot sample taken from a sample tap on the side of a tank. It may also be referred to as a tank-side sample.

AVA Documents
Document Sharing Hub

Full document details: ASTM D4057-22

TABLE 1 Sampling from Horizontal Cylindrical Tanks

Liquid Depth (% of Diameter)	Sampling Level (% of Diameter above Bottom)			Composite Sample (Proportional Parts)		
	Upper	Middle	Lower	Upper	Middle	Lower
100	80	50	20	3	4	3
90	75	50	20	3	4	3
80	70	50	20	2	5	3
70	...	50	20	...	6	4
60	...	50	20	...	5	5
50	...	40	20	...	4	6
40	...	...	20	...	...	10
30	...	...	15	...	...	10
20	...	...	10	...	...	10
10	...	...	5	...	...	10

3.3.27 *test specimen, n*—a representative sub-sample taken from the primary or intermediate sample container for analysis.

3.3.28 *top sample, n*—a spot sample obtained 15 cm (6 in.) below the top surface of the liquid. See Fig. 5.

3.3.29 *tube sample (thief sample), n*—a sample obtained with a sampling tube or special thief, either as a core sample or spot sample, from a specific point in the tank or container.

3.3.30 *upper sample, n*—a spot sample taken from the middle of the upper one third of the tank's contents (a distance of one-sixth of the depth of the liquid below the liquid's surface). See Fig. 5.

3.3.30.1 *Discussion*—For tap sampling, the tap is often not in the middle of the upper layer. Use the available tap closest to the middle of the upper layer. While it is not in the exact middle of the upper one-third of the tank's content, it should still yield a sample representative of the upper layer.

3.3.31 *volumetric composite sample, n*—a sample consisting of measured proportional parts from each zone if it is for a single tank. If the volumetric composite is for multiple tanks, or vessel compartments, it consists of measured proportional parts from each tank or compartment sampled.

3.3.32 *zone sample, n*—a sample taken as that part of the liquid column that is trapped within the whole height of a sampling device when it is sealed at a single spot location within a tank after having been fully flushed as it was lowered to that position.

4. Significance and Use

4.1 Samples of petroleum and petroleum products are obtained for many reasons, including the determination of chemical and physical properties. These properties may be used for: calculating standard volumes; establishing product value; and often safety and regulatory reporting.

4.2 There are inherent limitations when performing any type of sampling, any one of which may affect the representative nature of the sample. As examples, a spot sample provides a sample from only one particular point in the tank, vessel compartment, or pipeline. In the case of running or all-level samples, the sample only represents the column of material from which it was taken.

4.3 Based on the product, and testing to be performed, this practice provides guidance on sampling equipment, container preparation, and manual sampling procedures for petroleum and petroleum products of a liquid, semi-liquid, or solid state, from the storage tanks, flowlines, pipelines, marine vessels, process vessels, drums, cans, tubes, bags, kettles, and open discharge streams into the primary sample container.

5. Health and Safety Precautions

5.1 *General*—This practice does not purport to cover all safety and health aspects associated with sampling. Personnel involved with sampling of petroleum and petroleum-related products should be familiar with their physical and chemical characteristics, including: potential for fire, explosion, and reactivity; toxicity and health hazards; and appropriate emergency procedures. Additionally personnel should comply with individual company safe operating practices and local, state, and national regulations, including the use of personal protective equipment (PPE). Upon completion of any sampling activity, ensure the sample point is left in a safe, secure, and clean condition with the handling of any waste in accordance with local requirements. All marine vessel sampling should be performed in the presence of a designated vessel representative.

5.2 *Sample Handling*—For safety and protection of the integrity of the samples, sample carriers are suggested in most instances. Refer to Fig. 6. Because of potential liquid thermal expansion, sample containers that are completely, or nearly full, are not to be transported or stored, unless special precautionary measures are taken. A safe fill of between 70 % and 85 % is recommended. Refer to definition for maximum fill density and 9.30 for safe fill of pressurized cylinders. Take care to avoid heating samples in containers with gas-tight caps, lids, and stoppers. Handle any sample containing hazardous materials or the residue of hazardous materials offered for shipment/transportation by air, public roadway, rail, or water in such a manner as to ensure compliance with requirements such as training, documentation, labeling, container, packaging, communications, and so forth, set forth in applicable regulations, such as those issued by the International Air Transport Association (IATA) and the U.S. Department of Transportation (DOT).

5.3 *Sample Point Safety:*

5.3.1 Provide sample points that enable samples to be taken in a safe manner, considering ventilation during sampling, clear access/egress, and lighting. Any potential hazards associated with sampling, or located near the sample point, should be clearly marked. It is recommended that a pressure gauge and a method of closed loop flushing with safe drainage be

AVA Documents Document Sharing Hub

Full document details: ASTM D4057-22

FIG. 6 Typical Sample Carrier

provided at pipeline sample points. Sample points and related equipment should be maintained and inspected regularly.

5.3.2 Floating-roof tanks should be sampled from the top platform, thereby avoiding descent onto the floating roof.

5.3.2.1 Descending onto a floating roof is normally considered entering a designated confined space, requiring all facility and regulatory requirements to be strictly followed, including obtaining a confined space permit, and rescue provisions arranged. Toxic and flammable vapors may accumulate on the roof. Climbing stairs of tanks and descending onto floating roofs can pose an increased safety risk for personnel.

5.4 *Static Electricity Hazards:*

5.4.1 A number of fires and explosions have occurred as a result of hydrocarbon vapors being ignited by static electricity. If electrical charges are not earthed or grounded, they are unable to dissipate and become "static." This static electric charge can accumulate and freely migrate to a single point on the sample container by a difference in electrical potential, then jump off as a high-energy spark discharge to a nearby less charged surface, often hot and prolonged enough to ignite nearby hydrocarbon vapors above the lower explosive limit (LEL). This potential shall be managed by safely dissipating static charges, and through proper grounding, when sampling flammable products.

5.4.2 Footwear or clothing, capable of causing sparks, should not to be worn during sampling activities in which flammable vapors are likely to be present. Sampling should not be carried out during periods of atmospheric electric disturbance or hail storms. To ground any static charge on their person, the individual performing the sampling should touch part of the tank structure at least 1 m (3 ft) from the sample point immediately before sampling.

5.4.3 Precautions are to be observed before sampling to reduce the likelihood of a static charge being present. During tank filling or mixing operations, and for 30 min after the completion, sampling equipment shall not be introduced into, or remain in, the tank. With full observance of applicable regulatory requirements, and only under very specific and documented conditions, some exceptions to the 30 min relaxation period may apply. Some tanks and vessel compartments have inert gas blankets in the vapor space above the liquid. Unless the effectiveness of the inert blanket can be verified, all static charge precautions and recommendations should be observed.

5.4.4 Exercise caution when using equipment made of aluminum, magnesium, or titanium, which may generate incendiary sparks when struck against rusted steel. Some countries restrict the use of sampling equipment made from such materials or from alloys containing more than 15 % (m/m) in total of these metals or 6 % (m/m) of magnesium.

5.5 *Pipeline/Line Sampling*—When sampling from a flowing pipeline, maintain electrical continuity between the pipeline and the sample container via the connecting pipework. Do not use plastic containers since they are non-conductive and will not dissipate static electricity. Use a static grounding clamp or other arrangement that ensures adequate electrical continuity is maintained if sampling with a metal container. An effective ground should be verified.

NOTE 1—The API safety publication Protection Against Ignitions Arising Out of Static, Lightning, and Stray Currents states that electrical resistances of higher than 10 in metal circuits are indicative of a break in the continuity of the circuit, resulting in the undesirable accumulation of static electricity.[7]

5.6 *General Health Hazards and Precautions:*

5.6.1 Petroleum vapor dilutes oxygen in the air and may also be toxic. Hydrogen sulfide vapors are particularly hazardous. Harmful vapors or oxygen deficiency cannot always be detected by smell, visual inspection, or judgment. The use of oxygen and toxic gas monitors, PPE, and emergency rescue precautions should be considered for all sampling operations. Self-contained breathing apparatus (SCBA) may be necessary. Personnel should position themselves upwind of the sample point to minimize exposure to any harmful vapor which may be released.

5.6.2 This discussion on safety and health is not exhaustive. The appropriate Material Safety Data Sheet (MSDS), API, or ASTM International publication should be consulted, together with applicable regulatory requirements, and the International Safety Guide for Oil Tankers and Terminals (ISGOTT),[8] Safety of Life at Sea (SOLAS),[9] and Oil Companies International Marine Forum (OCIMF),[10] while always observing company and local health and safety requirements.

6. Apparatus

6.1 *General Sample Container Design Considerations:*

6.1.1 Sample containers come in a variety of shapes, sizes, and materials. Select the proper container based on the product to be sampled to ensure that there will be no interaction

[7] *Protection Against Ignitions Arising Out of Static, Lightning, and Stray Currents*, Edition 7, American Petroleum Institute, Washington, DC, 2008.

[8] *International Safety Guide for Oil Tankers and Terminals (ISGOTT)*, Hyperion Books, 2006.

[9] *International Convention for the Safety of Life at Sea (SOLAS)*, International Maritime Organization, London, UK, 1974.

[10] Available from Oil Companies International Marine Forum (OCIMF), 29 Queen Anne's Gate, London SW1H 9BU, U.K., http://www.ocimf.com.

AVA Documents
Document Sharing Hub

Full document details: ASTM D4057-22

between the product sampled and the container that would affect the integrity of either. The following are general design considerations for sample containers:

6.1.1.1 No internal pockets or dead spots;

6.1.1.2 Internal surfaces designed to minimize corrosion, encrustation, and water/sediment clingage;

6.1.1.3 An inspection cover/closure of sufficient size to facilitate filling, inspection, and cleaning;

6.1.1.4 Designed to allow the preparation, and transfer to the analytical apparatus, of a homogeneous mixture of the sample while minimizing the loss of any constituents that affect the representativeness of the sample and the accuracy of the analytical tests.

6.1.2 Additional considerations in the selection of sample containers are the type of mixing required before transferring from the primary container, and the analysis to be performed. To facilitate the discussion on proper handling and mixing of samples, sample containers are referred to as either primary or intermediate containers. Regardless of the type of sample container used, the sample container should be large enough to contain the required sample volume and sufficient ullage space for thermal expansion and mixing of the sample.

6.1.3 While this practice is meant to provide some guidance related to particular products and tests, it remains the responsibility of the subcommittee for the relevant test method to provide specific guidance regarding sample container selection, preparation, cleanliness, and sample size requirements for testing and retention. Also refer to Practice D5854 (API *MPMS* Chapter 8.3), Practice D5842 (API *MPMS* Chapter 8.4), and Practice D4306.

6.2 *Glass Bottles*—See Fig. 7. Glass containers are suitable for many sample test and storage requirements. Clear glass bottles can be easily examined visually for cleanliness, and allow for visual inspection of the sample for haze (cloudiness), discoloration, free water, and solid impurities. The brown glass bottle affords some protection to the samples when light may affect the test results. Refer to Practice D5854 (API *MPMS* Chapter 8.3).

6.3 *Cans*—When using cans, any seams shall have been soldered on the exterior surfaces with a flux of rosin in a suitable solvent. Such a flux is easily removed with gasoline, whereas many others are very difficult to remove. Cans made of stainless steel with welded seams, and aluminum bottles, are suitable for many sampling operations, but cleanliness is still required. Minute traces of flux may contaminate the sample so that results obtained on tests such as dielectric strength, oxidation resistance, and sludge formation may be erroneous. For aviation fuel sampling, refer to Practice D4306.

6.4 *Plastic Bottles*—In general, plastic bottles made of suitable material may be used for the handling and storage of diesel oil, fuel oil, and lubricating oil. Bottles of this type should not be used for gasoline, aviation jet fuel, kerosene, crude oil, white spirit, medicinal white oil, or other petroleum products unless testing indicates there is no problem with solubility, contamination, or loss of light components. In no circumstances shall nonlinear (conventional) polyethylene containers be used to store samples of liquid hydrocarbons.

FIG. 7 Amber and Clear Boston Round Bottles

This is to avoid sample contamination or sample bottle failure. Used engine oil samples that may have been subjected to fuel dilution should not be stored in plastic containers. Plastic bottles do have an advantage in that they will not shatter like glass or corrode like metal containers.

6.5 *Container Closures:*

6.5.1 Screw caps made of a material that will not deteriorate or contaminate the sample are to be used for glass bottles. Screw caps should provide a vapor-tight seal. Use care when using cork stoppers. Situations in which corks should not be used include: liquids in which loss of light ends may affect any test results; and liquids that are hygroscopic or have a low-water content specification. Rubber stoppers are not to be used.

6.5.2 Cans and plastic bottles should be closed with screw caps made of the same material as the container. Protect can screw caps with a disk faced with a material that will not deteriorate or contaminate the sample when used to store or transport samples. Consideration of closure type is important for samples in which vapor loss will affect the test results. Screw caps of a quality that provide a vapor-tight closure should be used for plastic bottles and cans. Use screw caps for containers used to take samples that will be tested for density or API gravity.

6.6 *Container Cleanliness*—Sample containers shall be clean and free from all substances that might contaminate the

AVA Documents
Document Sharing Hub

Full document details: ASTM D4057-22

product being sampled (such as water, dirt, lint, washing compounds, naphtha and other solvents, soldering fluxes, acids, rust, and oil). Reusable containers shall be cleaned by a method that has been determined as acceptable for the intended use, for example by rinsing with a suitable solvent. Dry the container, for example either by passing a current of clean warm air through the container or placing it in a hot, dust-free cabinet at 40 °C (104 °F) or higher. When dry, stopper or cap the container. Normally, it is not necessary to wash new containers.

6.7 *Container Compatibility for Sample Mixing*—The sample container should be compatible with the mixing system for remixing samples to ensure that a homogenous sample is transferred to an intermediate container or the analytical apparatus. This is particularly critical with crude oil, some black products, and condensates for sediment and water (S & W) analysis. Cylindrical containers are generally better suited for samples that are to be tested for S & W. Refer to Practice D5854 (API *MPMS* Chapter 8.3) for sample mixing and handling requirements.

6.8 *Low Pressure Variable Volume Containers*—Low pressure variable volume sample container designs include collapsible plastics containers, bladders, and vessels fitted with a flexible internal diaphragm. Before use, variable volume sample containers are normally collapsed, evacuated or reduced to the nominal zero volume. The sample container size is dependent on the quantity required for analysis (and/or retention). Prior to use, it may be appropriate to rinse the sample containers with the product being sampled, in order to avoid contamination from previous sample residue and/or solvents used to clean the low pressure variable volume containers. The sample should be transported to the laboratory in the container in which it was originally obtained (the primary sample container). Plastics containers are not recommended for long-term sample storage, unless it has been demonstrated that the plastic is suitable (that is, compatible with the sample) so that the integrity of the sample is not compromised. (**Warning—**The use of containers made of non-linear polyethylene may lead to sample contamination and/or sample container failure.)

6.9 *High Pressure Spot Sampling Systems and Cylinders:*

6.9.1 *Sample System Components*—All equipment, such as transfer lines, valves and pressure gages, associated with sampling shall be corrosion resistant and designed consistent with the maximum anticipated pressure. Experience has shown that the transfer lines should have a minimum internal diameter of 3 mm (⅛ in.) nominal and be as short as practical to minimize line blockage or sample vaporization, or both. The use of filters, dryers, needle valves and related equipment are not recommended, unless provisions are made to prevent excessive flow restriction and pressure drop. It is recommended to use a "T" junction with a purge valve at the sample connection point to allow purging of the dead volume at the sampler connection. Flexible hose or tubing with adequate pressure rating may be used.

6.9.2 *Cylinders*—High pressure cylinders are used for the collection of light liquid hydrocarbons and gas samples and subsequent transportation and storage. Typical light liquid hydrocarbon sample containers are fixed volume cylinders or floating-piston cylinders (FPCs). Refer to Practices D1265, D3700, and D6849.

Fixed Volume Cylinder

6.9.2.1 Fixed volume sample cylinders are also known as single cavity sample cylinders or spun cylinders. Refer to Fig. 1 and Fig. 2.

6.9.2.2 *Valves*—Fixed volume sample cylinders are typically available with either one or two valves serving as cylinder inlet and outlet valves. Recommend using two-valve fixed volume sample cylinders due to their ease of cleaning and purging prior to sampling. For repeated use, it is recommended that one-valve fixed volume sample cylinders be used for only one product, due to difficulty in cleaning.

6.9.2.3 *Internal Outage (Ullage) Tubes*—It is recommend that fixed volume cylinders be equipped with an internal outage (ullage) tube, designed to provide a vapor space of typically 20 % of the cylinder capacity, allowing for liquid thermal expansion. The end of the cylinder fitted with the outage (ullage) tube shall be clearly marked. If the cylinder does not have an internal outage (ullage) tube, use alternative purging and venting procedures to obtain a minimum 20 % ullage in the cylinder. An internal outage tube within a fixed volume sample cylinder may also be known as an ullage tube or dip tube.

Sample Cylinder Usage Considerations

6.9.2.4 The type of sample cylinder used and its materials of construction as well as hoses and fittings can affect the validity of the sample, as well as the accuracy of the analysis.

6.9.2.5 When the observed vapor pressure of the liquid being sampled is close to the line pressure, the reduction in sample pressure associated with the creation of the ullage space may result in phase separation that can make subsequent representative sub-sampling difficult. In these circumstances, an FPC should be used to ensure that the sample is maintained at sufficient pressure to prevent phase separation.

6.9.2.6 Where small concentrations of contaminants need to be quantified or where concentrations of volatile compounds other than the predominant component need to be quantified, an FPC is recommended.

NOTE 2—Practice D3700 describes a recommended practice for obtaining a representative sample of a light hydrocarbon fluid and the subsequent preparation of that sample for laboratory analysis when dissolved gases are present. Use of Practice D1265 using a fixed volume cylinder, will result in a small but predictable low bias for dissolved gases due to the liquid venting procedure to establish the 20 % minimum ullage.

6.9.2.7 *Cylinder Construction*—Cylinder construction is primarily dependent on the pressure and temperature of the product to be sampled, and the pressure vessel approval and certification requirements in the jurisdictions in which it is to be used and transported. All sample cylinder material, and equipment used for obtaining the sample, shall meet appropriate standards for construction, cleanliness and suitability for use, including product compatibility. Use corrosion resistant metal sample cylinders certified by the authority having jurisdiction for pressure vessels with adequate pressure rating for the product being sampled. Common materials used are

AVA Documents
Document Sharing Hub

Full document details: ASTM D4057-22

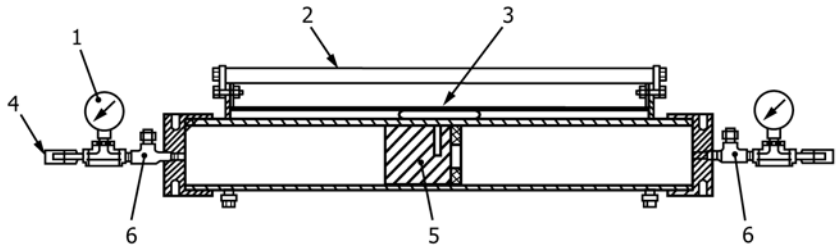

Key
1 pressure gauge
2 carrying handle
3 magnetic indicator
4 valve
5 floating piston
6 pressure relief device

FIG. 8 Example of Single Floating Piston (Variable Volume) Cylinder (FPC)

non-magnetic 300-series stainless steel, Monel (trademark),[11] Viton elastomeric components, and possibly other materials. The size of the cylinder depends upon the amount of sample required to perform the anticipated laboratory tests, and to be retained. Blanking cover caps may be provided to seal the valve connection points of high pressure sample cylinders prior to their transportation between the sampling location and the laboratory.

Floating Piston Cylinders (FPC)

6.9.2.8 FPC, also known as a variable-volume cylinder or pressure-balanced piston cylinder, can be used to sample pure and multi-component liquids and when properly operated, maintains the sample as a single-phase liquid. This device uses one, or two pistons, inside of the sample cylinder to maintain separation between the liquid sampled and the backpressure inert gas. The two-piston cylinder is known as the double-piston cylinder (DPC). The inert gas is vented slowly to allow the sample to enter the cylinder while maintaining a constant pressure on the sample. FPCs are typically constructed from a honed metal tube equipped with end caps, valves, piston, a relief device to protect against over-pressure, and a method of displaying the piston position. See Fig. 8, Fig. 9, and Fig. 10.

6.9.2.9 *Refrigerated Products*—The FPC shall be safely cooled to the temperature of the product being sampled when sampling refrigerated liquids that are near or below atmospheric pressure. Low cargo temperature (more than approximately 15 °C below ambient) and low cargo pressure (near atmospheric pressure) may affect the ability of the user to successfully capture a representative liquid sample using an FPC if additional care is not taken; and the use of a vacuum pump may be required. Refer to Practice D3700 and GPA S 2174.

6.9.2.10 *Piston Position Indicator*—The FPC shall be equipped with a piston position indicator such as a magnetic follower, piston rod, or equivalent that is used to indicate the sample volume to comply with the maximum percent fill (maximum fill density) allowed for storage and transportation. Do not use FPCs that are not equipped with a piston position indicator without a procedure to allow the operator to verify fill density immediately after sampling prior to transport. Consult the authority having jurisdiction for acceptable procedures. See Fig. 8 and Fig. 9.

6.9.2.11 *Lubricants*—Lubricants used to lubricate or seal the floating piston, O ring seals, and other components shall be inert to the product being sampled.

6.9.2.12 *Cylinder Coatings*—Some cylinders may be internally coated or lined to reduce the chances of bare metal surfaces reacting with trace reactive components, potentially altering the quality and integrity of the sample. For example, be absorbed into the structure of 316 stainless steel, so that testing for H_2S may require the cylinder to be coated. Protective internal coatings or surface treatments are acceptable for FPCs provided that they do not adversely affect the free movement of the piston, or effectiveness of the seals.

Cylinder Pressure Relief

6.9.2.13 Fit a ruptured disk or a self-resetting pressure relief valve to the cylinder to prevent overpressure as the result of liquid thermal expansion. It is recommended to use a spring relief valves if self-resetting is required. Typically, the maximum operating system pressure should be limited to 80 % of the nominal rating of the rupture disk for static operating pressure and ambient temperature. The relief maximum burst pressure shall not exceed the cylinder test pressure. Refer to applicable regulatory requirements for safe filling limits.

6.9.2.14 *Cylinder Pressure Relief Inspection*—The strength of rupture disks can deteriorate with time due to temperature, corrosion, and fatigue. In addition, pulsating pressure, vacuum/pressure cycling, heat, and corrosive fluids and atmospheres can reduce the disk's burst pressure. Relief valves and rupture disks should be inspected regularly. Do not alter valves or safety relief devices that are part of a cylinder permit or exemption.

NOTE 3—The USA has an exemption system, and Canada has a permitting procedure for non-American Society of Mechanical Engineers (ASME) or Department of Transportation (DOT) cylinders.

6.9.2.15 *Cylinder Pressure Relief Release*—The sudden release, typically accompanied by a loud noise and product released at high velocity, might create a hazard. If the sample

[11] Monel is a trademark of Special Metals Corporation.

AVA Documents
Document Sharing Hub

Full document details: ASTM D4057-22

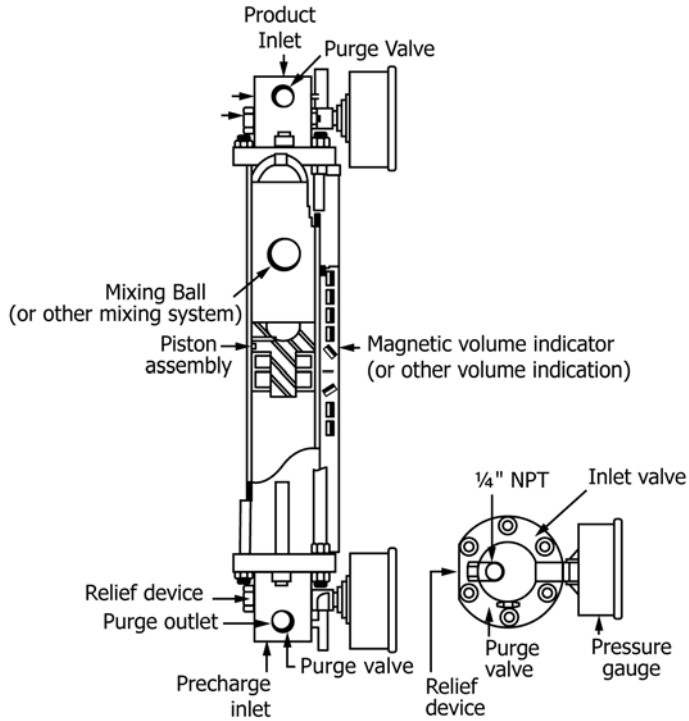

FIG. 9 Example of Single Floating Piston (Variable Volume) Cylinder (FPC)

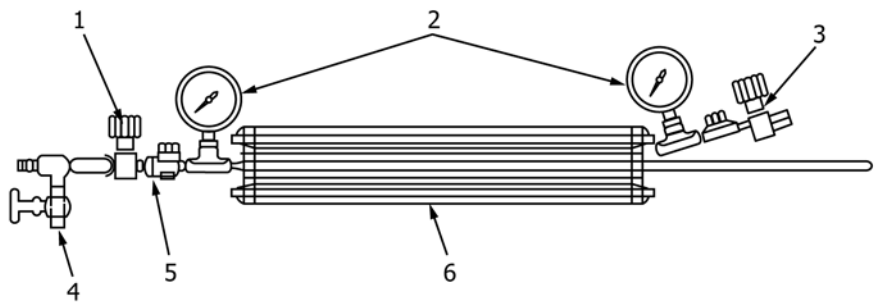

Key
1 product inlet (fill) valve
2 pressure gauges
3 inert gas pre-charge inlet valve
4 purge (exhaust) valve
5 pressure relief device
6 single-piston variable volume sample cylinder

FIG. 10 Example of Single Floating Piston (Variable Volume) Cylinder (FPC)

cylinder pressure exceeds the relief device setting and part of the sample cylinder contents are vented, the composition of the remaining sample is likely different from the original contents. Another sample should be drawn and procedures revised to avoid the circumstances that led to the overpressure condition.

6.9.3 *Cylinder Approval and Rating*—If the cylinder is to be transported, it shall also conform to specifications published in transportation legislation such as U.S. CFR 49 or Canadian Transportation of Dangerous Goods Regulations, and their supplements, reissues, or similar regulations in other jurisdictions.

6.9.4 *Cylinder Extreme Temperature Considerations*—For safe handling of cylinders under extremes of product or ambient temperatures, or both, the user shall consider the effects of thermal expansion on the volume of product in the cylinder. For example, if a very cold (for example, –40 °C (–40 °F)) product is sampled, the cylinder should be expected to warm considerably before analysis is performed during transport and in the laboratory. During summer months, the temperature of the cylinder and product could reasonably be expected to rise to as high as 46 °C (115 °F) in hot environments. A cylinder initially filled to 80 % of its capacity will be

Documents
Document Sharing Hub

Full document details: ASTM D4057-22

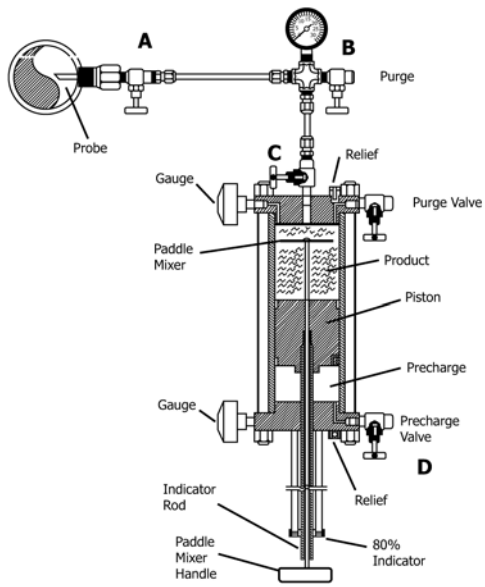

FIG. 11 Example of Typical High-Pressure Sampling System

over pressured and the relief device(s) will activate under these conditions. In such an extreme but not uncommon case the cylinder should not be filled more than approximately 60 % during the initial fill. The appropriate industry volume correction factor data and calculations should be consulted to determine the maximum fill for the product being sampled. It is recommended that users work with the manufacturer of these sample cylinders and sample collection systems any time ambient or product temperatures, or both, exceed the range of –29 °C (–20 °F) to 60 °C (140 °F). Consider the effects of extreme temperature on metal, O-rings, valve seats, seals, gauges, relief devices, sample pump components and other devices and components in the system.

6.9.5 *Mixing Capability*—The cylinder may include a mechanism to mix the sample in the sample chamber in case of stratified mixtures or water haze that may settle after sampling. This mechanism may be a mechanical mixer/vortex plate on a movable rod, a freely moving rolling ball or slider, magnetically coupled stirrer, or similar device. Some designs of FPCs have two pistons, which enable the sample to be mixed within the cylinder (prior to sub-sampling) by repeatedly forcing it through a central mixing device. See Fig. 9 and Fig. 11.

6.9.6 *Sample Cylinder Cleanliness*—To ensure the sample cylinder and its components do not affect the integrity and quality of the sample obtained, the user shall establish an acceptable cylinder cleaning and preparation process based on experience, and considering the following factors:

(1) Type of cylinder and design,

(2) Cylinder material and lining,

(3) Cylinder components (valves, seals, etc.) and attached tubing/lines,

(4) Recent history of the cylinder, including repair or last product,

(5) Product being sampled,

(6) Product test methods,

(7) Purity of product being sampled, and concern with trace contaminants, and

(8) Use of cleaning agents.

6.9.6.1 *Sample Cylinder Cleaning and Purging Methods*—Based on the above factors any one, or combination, of the following may be deemed as satisfactory cylinder cleaning methods:

(1) Purging and flushing of the cylinder using a cleaning agent or solvent, for example acetone or methanol. It is recommended to purge and flush the sample cylinder at least three times.

(2) Purging and flushing of the cylinder using an inert gas, such as helium and nitrogen. Testing of the inert gas present in the cylinder is recommended to confirm no trace of hydrocarbon gas or impurities. It is recommended to purge and flush the sample cylinder at least three times.

(3) Purging and flushing of the cylinder using the product being sampled. It is recommended to purge and flush the sample cylinder at least three times.

(4) Steam (not recommended for floating piston cylinders).

(5) Warming and drying of cylinders.

(6) Manufacturer's recommendations.

6.9.6.2 Cylinders used in continuous service, for example with specification LPG products or stabilized crude, may not require disassembly or cleaning before each use. For example, it may be acceptable to vent the previous product as a liquid, and remove remaining sample from dead volume by solvent rinsing, evacuation, gas purge, or equivalent procedure. (**Warning—**Disassembly of the piston cylinder for maintenance requires special precautions. If either end cap is removed while pressure is on the cylinder, the end caps and the piston can be ejected with such a force as to cause serious injury to

Documents
Document Sharing Hub
Full document details: ASTM D4057-22

TABLE 2 Commonly Used Manual Sampling Devices for Liquid Products

Top Fill	Flow Through/Trap	Bottom Fill
Cage/weighted bottle	Zone/Core	Dead bottom sampler (Bacon Bomb)
Weighted beaker	Core/interface	Tube
Tap	Bottom water and ROB/OBQ High pressure cylinders	

personnel and damage to equipment. Consult the manufacturer's instructions, and regulatory guidelines, for the maintenance and safe disassembly instructions for all cylinders.) Refer to Practice D6849.

6.10 *Special Sample Cylinders*—Specially designed single purpose sample cylinders are often used for non-compositional tests, the testing of trace constituents using specific instruments, and physical property testing devices. Refer to Test Method D1838, Test Method D1267, API *MPMS* 14.6, and Test Method D1657 (API *MPMS* Chapter 9.2) for details. In addition, spot samples may be tested for some components, including trace analysis using length-of-stain tubes, gas content using lower explosive limit or gas detectors, oxygen content using oxygen detectors and trace oxygen analyzers, and moisture content using dew point instruments. Refer to manufacturer's instructions and appropriate industry standards for use and applicability.

7. Sampling Devices/Equipment and Accessories

Introduction

7.1 The preferred manual sampling devices and processes are those that do not require the sample to be transferred from the primary sample container to an intermediate container. Sampling devices shall be designed, constructed, and maintained to ensure that they perform the purpose or function for which they are intended. They shall be of sufficient strength to withstand pressures likely to be generated and sufficiently robust to withstand normal handling. Liquid sampling devices shall be leak-tight to maintain the initial characteristics of the sample. Materials of construction for sampling devices and their accessories should be compatible with the product sampled and ensure that there will be no interaction between the product and the sampling device that would affect the integrity of either.

7.2 If there is any question regarding the applicability of the sampling device to a specific product, testing should be performed to verify compatibility. Table 2 contains a listing of commonly used manual sampling devices for liquid products; categorized by the method by which the sampler is filled.

7.3 *Cage Sampler:*

7.3.1 A cage sampler shall be constructed of a spark-reducing metal, appropriately sized to hold the container, typically a 1 L (1 qt) bottle. See Fig. 12. The lowering and retrieval equipment shall be attached to the cage in such a manner that a stopper can be opened by means of a sharp jerk. A restricting device, such as a cap with a hole drilled in it, may be used to restrict the filling rate. The combined apparatus shall be weighted so as to sink readily in the product to be sampled. Cage samplers may be used to obtain spot, running and all-levels samples.

7.3.2 The use of a sampling cage, or any sampling process that avoids the need to transfer the sample into an intermediate sample container, is preferred for samples used for volatility testing.

7.4 *Weighted Bottle*—Configure the weighted bottle sampler by attaching a weighted line to the sample bottle as shown in Fig. 13. The stopper should be tied to the cord about 150 mm (6 in.) from the neck of the bottle. Attach the lowering device to the bottle in such a manner that the stopper may be opened by means of a sharp jerk of the lowering cord. A restricting device, such as a cap with a hole drilled in it, may be used to restrict the filling rate. Weight the combined apparatus so as to sink readily in the product to be sampled. Design shall allow for filling the container at any desired level. A weighted bottle sampler may be used to obtain spot, running, and all-levels samples.

7.5 *Weighted Beaker*—The sampling beaker shall be constructed of a spark-reducing metal and weighted so as to sink readily in the liquid to be sampled. The lowering and retrieval equipment shall be attached to the sampler in such a manner that a stopper can be opened by means of a sharp jerk. To reduce the difficulty with cleaning the beaker, any weighting material shall be fixed to the beaker in such a way that it does not come into contact with the sample. Weighted beaker sampler may be used to obtain spot, running, and all-levels samples. Caution shall be exercised to ensure that a residue from prior samplings does not contaminate subsequent samples obtained. Samples obtained using a weighted beaker requires transfer to an intermediate container, potentially affecting the integrity of the sample. See Fig. 14.

7.6 *Bottom Water and Remaining On-Board/On-Board Quantity (ROB/OBQ) Sampler/Scraper*—Typically constructed of copper or brass tubing, open at the top, designed with a clip on one side, and rounded bottom to allow the sampler to tip over on the tank or vessel compartment bottom. This device may have a removable bottom for cleaning. Sampler fills with product at first, hits the bottom, and falls over. Product rises to the top with free water displacing the product in the sampler. Use the sampler/scraper in a similar manner to sample very small volumes in a tank or OBQ/ROB product on marine vessels including, sludge and semi-liquid or high-viscosity material residue. See Fig. 15.

7.7 *Tank Tap Sampling:*

7.7.1 Each tap should be a minimum of 1.25 cm (½ in.) in diameter. Taps with a 2.0 cm (¾ in.) diameter or more may be required for heavy, viscous liquids, for example, those with a relative density of 0.9465 or greater (18.0° API or less). On tanks that are not equipped with floating roofs, each sample tap should extend into the tank a minimum of 10 cm (4 in.). Some sample taps may be equipped with a delivery tube that permits the filling of the sample container from the bottom, as reflected in Fig. 16. Refer to Practice D5842 (API *MPMS* Chapter 8.3).

AVA Documents
Document Sharing Hub

Full document details: ASTM D4057-22