This international standard was developed in accordance with internationally recognized principles on standardization established in the Decision on Principles for the Development of International Standards, Guides and Recommendations issued by the World Trade Organization Technical Barriers to Trade (TBT) Committee.

Designation: D4506 – 21

Standard Test Method for Determining In Situ Modulus of Deformation of a Rock Mass Using the Radial Jacking Test[1]

This standard is issued under the fixed designation D4506; the number immediately following the designation indicates the year of original adoption or, in the case of revision, the year of last revision. A number in parentheses indicates the year of last reapproval. A superscript epsilon (ε) indicates an editorial change since the last revision or reapproval.

1. Scope*

1.1 This test method is used to determine the in situ modulus of deformation of rock mass by subjecting a test chamber in rock of a circular cross-section to uniformly distributed radial loading; the consequent rock radial displacements are measured at various locations, from which the deformation modulus may be calculated. The radial anisotropic deformability of the rock is taken at enough locations that it can also be determined from the differences between the extensometer readings taken at various locations along and around the test chamber as well with depth from each loading sequence. Information on time-dependent deformation may be obtained as well by holding the loads constant for selected time intervals.

NOTE 1—Deformations caused by a cylindrical test chamber are not likely uniform even if each steel ring forming the jack is uniformly loaded. Theoretically, the deformations will vary along the cylinder such that it looks like a gaussian probability curve.

1.2 This test method is based upon the procedures developed by the US Bureau of Reclamation, featuring long extensometers that provide a bottom anchor far enough away from the test zone to be used as a zero reference point (Fig. 1)(**1**).[2] An alternative procedure, the New Austrian method, is also available and is based on a reference bar going down the middle to support posts outside the deflection zone due to the testing loads and shown in Fig. 2(**2**). Other than a different method of taking deformation readings, the two field tests are the same. Additional information on radial jacking and data analysis is presented in References (**3-8**).

1.3 Application of the test results is beyond the scope of this test method, but may be an integral part of some testing programs. (See Note 2.)

NOTE 2—For example, in situ stresses around the test tunnel will affect the test results, depending on how the test results will be used and may need to be considered in any analyzes or recommendations.

1.4 Testing of the in situ rock deformation behavior is limited by the maximum stress range of the reaction frame and the flat jacks.

1.5 *Units*—The values stated in inch-pound units are to be regarded as standard. The values given in parentheses are rationalized mathematical conversions to SI units that are provided for information only and are not considered standard. Reporting of test results in units other than inch-pound shall not be regarded as nonconformance with this test method.

1.5.1 The SI units presented for apparatus are substitutions of the inch-pound units, other similar SI units should be acceptable, providing they meet the technical requirements established by the inch-pound apparatus.

1.5.2 The gravitational system of inch-pound units is used when dealing with inch-pound units. In this system, the pound (lbf) represents a unit of force (weight), while the unit for mass is slugs. The slug unit is not given unless dynamic (F=ma) calculations are involved.

1.5.3 The slug unit of mass is typically not used in commercial practice; that is, density, balances, and so on. Therefore, the standard unit for mass in this standard is either kilogram (kg) or gram (g) or both. Also, the equivalent inch-pound unit (slug) is not given/presented in parenthesis.

1.5.4 It is common practice in the engineering/construction profession to concurrently use pounds to represent both a unit of mass (lbm) and of force (lbf). This practice implicitly combines two separate systems of units; the absolute and the gravitational systems. It is scientifically undesirable to combine the use of two separate sets of inch-pound units within a single standard. As stated, this standard includes the gravitational system of inch-pound units and does not use/present the slug unit for mass. However, the use of balances or scales recording pounds of mass (lbm) or recording density in lbm/ft^3 shall not be regarded as nonconformance with this standard.

1.5.5 Calculations are done using only one set of units; either SI or gravitational inch-pound. Other units are permissible, provided appropriate conversion factors are used to maintain consistency of units throughout the calculations, and similar significant digits or resolution, or both are maintained.

[1] This test method is under the jurisdiction of ASTM Committee D18 on Soil and Rock and is the direct responsibility of Subcommittee D18.12 on Rock Mechanics.

Current edition approved Sept. 1, 2021. Published October 2021. Originally approved in 1985. Last previous edition approved in 2013 as D4506 – 13$^{\varepsilon 1}$. DOI: 10.1520/D4506-21.

[2] The boldface numbers in parentheses refer to the list of references appended to this standard.

*A Summary of Changes section appears at the end of this standard

Copyright © ASTM International, 100 Barr Harbor Drive, PO Box C700, West Conshohocken, PA 19428-2959. United States

Documents
Document Sharing Hub
Full document details: ASTM D4506-21

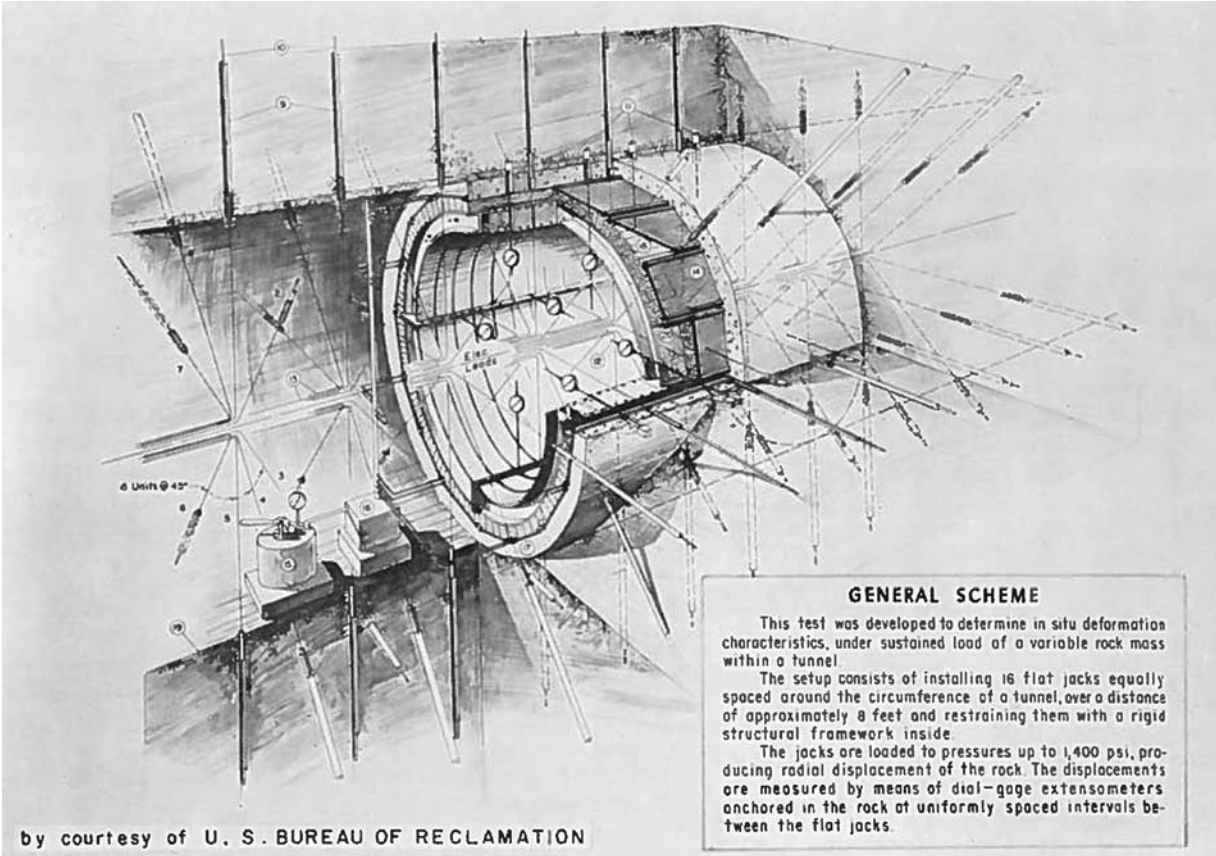

FIG. 1 General Diagram and Scheme of a Radial Jacking Test Setup used by the US Bureau of Reclamation (1, 9)

1.6 All observed and calculated values shall conform to the guidelines for significant digits and rounding established in Practice D6026, unless superseded by this standard.

1.6.1 For purposes of comparing measured or calculated value(s) with specified limits, the measured or calculated value(s) shall be rounded to the nearest decimal or significant digits in the specified limits.

1.6.2 The procedures used to specify how data are collected/recorded or calculated in this standard are regarded as the industry standard. In addition, they are representative of the significant digits that generally should be retained. The procedures used do not consider material variation, the purpose for obtaining the data, special purpose studies, or any considerations for the user's objectives; and it is common practice to increase or reduce significant digits of reported data to be commensurate with these considerations. It is beyond the scope of this standard to consider significant digits used in analytical methods for engineering design.

NOTE 3—The discussion about significant digits and rounding in 1.6 above and within the standard sections that follow about significant digits, rounding, accuracy, and the number of readings is geared more toward manual type readings. However, even with any electronic data acquisition system, the readings should still be taken equal to or better than with any manual data acquisition requirements.

1.7 *This standard does not purport to address all of the safety concerns, if any, associated with its use. It is the responsibility of the user of this standard to establish appropriate safety, health, and environmental practices and determine the applicability of regulatory limitations prior to use.*

1.8 *This international standard was developed in accordance with internationally recognized principles on standardization established in the Decision on Principles for the Development of International Standards, Guides and Recommendations issued by the World Trade Organization Technical Barriers to Trade (TBT) Committee.*

2. Referenced Documents

2.1 *ASTM Standards:*[3]

C31/C31M Practice for Making and Curing Concrete Test Specimens in the Field

D420 Guide for Site Characterization for Engineering Design and Construction Purposes

D653 Terminology Relating to Soil, Rock, and Contained Fluids

D3740 Practice for Minimum Requirements for Agencies Engaged in Testing and/or Inspection of Soil and Rock as Used in Engineering Design and Construction

D4403 Practice for Extensometers Used in Rock

[3] For referenced ASTM standards, visit the ASTM website, www.astm.org, or contact ASTM Customer Service at service@astm.org. For *Annual Book of ASTM Standards* volume information, refer to the standard's Document Summary page on the ASTM website.

AVA Documents
Document Sharing Hub

Full document details: ASTM D4506-21

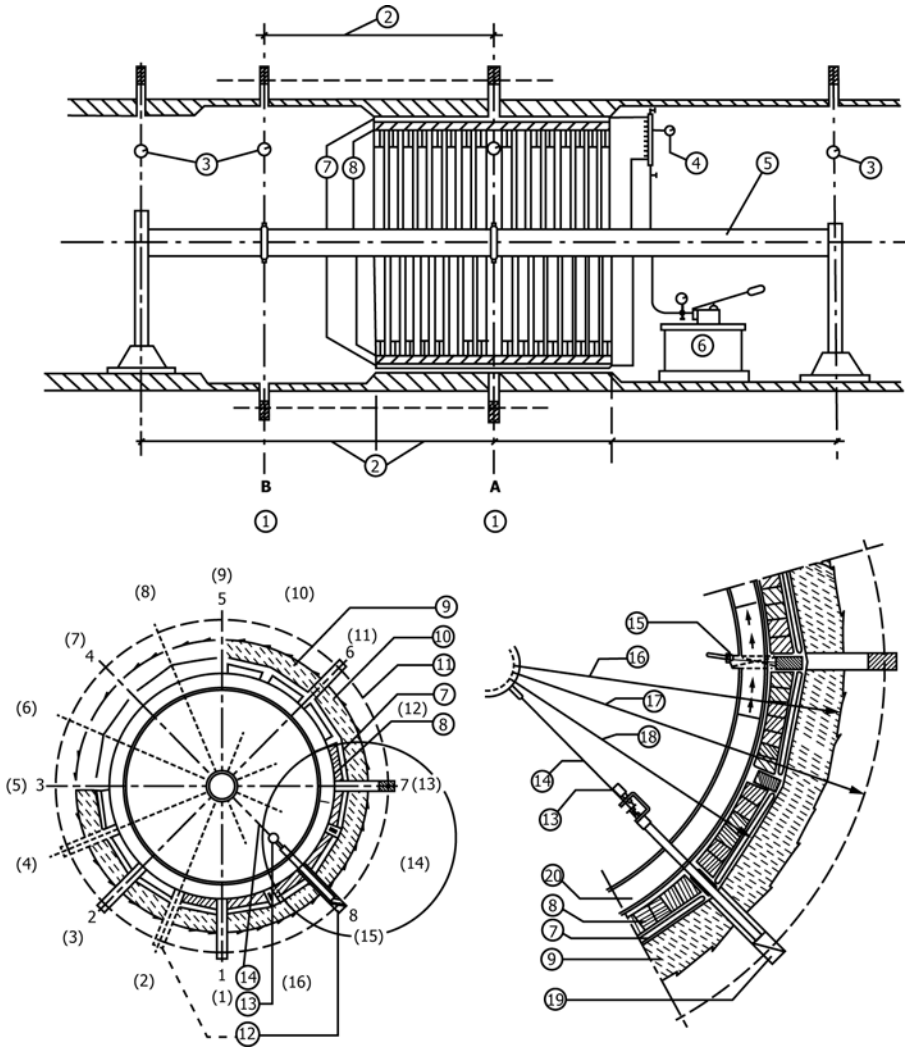

Circled numbers: 1. Measuring profile. 2. Distance equal to the length of active loading. 3. Control extensometer. 4. Pressure gauge. 5. Reference beam. 6. Hydraulic pump. 7. Flat jack. 8. Wood spacer for reaction frame curvature compensation. 9. Concrete. 10. Excavation diameter. 11. Measuring diameter. 12. Extensometer drillholes. 13. Dial gauge extensometer. 14. Steel rod. 15. Expansion wedges. 16. Excavation radius. 17. Measuring radius. 18. Inscribed circle for flat jacks. 19. Rockbolt or extensometer anchor. 20. Reaction frame ring.

The example shown here is the Austrian method and, while outdated, shows most of the essential components of the more common setups.

FIG. 2 Longitudinal, Cross-section, and Close-up View of the Radial Jacking Test Setup (2)

D6026 Practice for Using Significant Digits and Data Records in Geotechnical Data

D6032 Test Method for Determining Rock Quality Designation (RQD) of Rock Core

E122 Practice for Calculating Sample Size to Estimate, With Specified Precision, the Average for a Characteristic of a Lot or Process

3. Terminology

3.1 *Definitions:*

3.1.1 For definitions of common technical terms in this standard, refer to Terminology D653.

3.2 *Definitions of Terms Specific to This Standard:*

3.2.1 *deformation, n—in rock mechanics*, the change in the diameter of the excavation in rock (test chamber).

3.2.2 *measuring radius or diameter, n—in rock mechanics*, the distance from the center of the test chamber to extensometer anchor in question

4. Summary of Test Method

4.1 A circular test chamber is excavated in a location and orientation normal to the direction of interest. Exploratory holes are drilled perpendicular to the excavated chamber to map the geology, obtain rock core samples, and use as extensometer holes for the test.

4.2 Multiple point extensometers are placed in the drill holes with downhole anchors placed at specific locations determined from the drill hole data. The reaction frame is erected, and flat jacks are placed around the periphery of the frame. The annular space between the test chamber wall and the reaction frame and flat jacks is filled with concrete and allowed to cure.

4.3 A uniformly distributed pressure is applied to the chamber surfaces by flat jacks positioned around the reaction frame's circumference (Fig. 1, Fig. 2, and Appendix X1). Flat jack pressure is measured with a standard hydraulic transducer.

AVA Documents
Document Sharing Hub

Full document details: ASTM D4506-21

Rock deformation is measured at various locations and depths by the extensometers placed in boreholes perpendicular to the chamber surfaces (Fig. 1 and Appendix X2). For each test load cycle, the radial pressure is increased incrementally to a predetermined load level, and deformation readings are taken at each increment. The pressure is held constant, and deformation is observed over time to determine time-dependent behavior at specified loading increments. The load is then removed incrementally, and the deformation from the extensometers is recorded at each increment. This loading cycle is repeated for each load cycle in the testing plan.

4.4 The modulus is calculated for the loading, creep, and unloading cycle. The permanent deformation from the start of a test cycle to when it is unloaded is determined too.

5. Significance and Use

5.1 Data on the response of a rock mass to in situ loading provides essential information for many purposes in the science of rock mechanics, in the construction of dams, tunnels, bridges, high-rise structures, and other facilities that exert pressure on the foundation material or surrounding rock mass.

5.2 This test method is similar to a pressuremeter or dilatometer test in rock boreholes. The most significant difference is it engages a much larger volume of the rock mass. By testing a larger rock volume, the influence of discontinuities and other geologic factors on rock mass response to loading is more accurately determined. (Fig. 3)

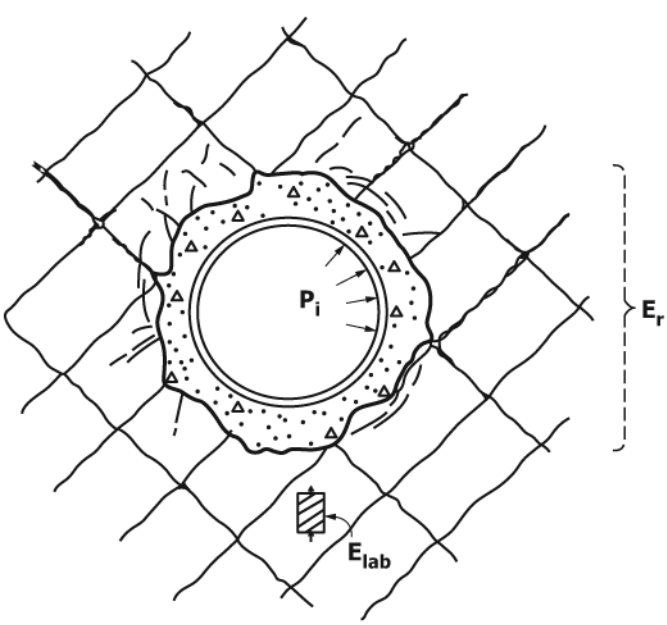

E_r = Modulus of Rock Moss

E_{lab} = Modulus of Intact Specimens

Radial jacking test engages a larger volume of the rock mass than with other test method options, such as laboratory (E_{lab}) and borehole tests other than some geophysical borehole and cross-hole tests.

FIG. 3 Modulus of Rock Mass

5.3 This test method should be used when values are required which represent the rock mass properties more accurately than can be obtained through less expensive uniaxial jacking tests, laboratory, or other test methods or procedures. Also, it could be valuable for obtaining such data before or after computer modeling to verify and fine-tune any computer model output.

5.4 Examples of when this test method would be useful is to design pressurized unlined or lined tunnels and shafts.

NOTE 4—The quality of the result produced by this standard is dependent on the competence of the personnel performing it, and the suitability of the equipment and facilities used. Agencies that meet the criteria of Practice D3740 are generally considered capable of competent and objective testing/sampling/inspection/etc. Users of this standard are cautioned that compliance with Practice D3740 does not in itself assure reliable results. Reliable results depend on many factors; Practice D3740 provides a means of evaluating some of those factors.

6. Apparatus

6.1 *Chamber Excavation Equipment*—Including drilling and "smooth wall" blasting equipment or mechanical excavation equipment capable of producing typically a 9-ft (3-m) diameter tunnel with a length about three times that dimension.

6.2 *Concreting Equipment*—Concreting materials, forming materials, and equipment for lining the tunnel between the test chamber wall and the reaction frame and flat jacks, together with strips of weak jointing materials for segmenting the lining.

6.3 *Reaction Frame*—The reaction frame consists of segments that are comprised of metallic rings that, when assembled, form a continuous loop and with a length specified for active loading, as depicted in Fig. 1 and Fig. 2. The metallic rings are typically made of steel or aluminum. The reaction frame shall be of sufficient strength and rigidity to resist the forces applied by the flat jacks and maximize deformation of the flat-jacks toward the tunnel wall. For applying loads by flat jacks, the frame must be provided with smooth surfaces; wood planks are usually inserted between the flat jacks and the metal rings to address the curvature difference between the flat jacks and the frame.

6.4 *Loading Equipment*—To apply a uniformly distributed and known radial pressure to the inner face of the concrete lining, including:

6.4.1 *Hydraulic Pump*—With all necessary hoses, manifolds, connectors, and fluid, capable of applying the required pressure and holding this pressure constant to within 5 % for at least 24 h to the flat jacks.

6.4.2 *Flat Jacks*—Used for load application (Fig. 2), and are of a practicable width and of a length equal at least to the diameter of the tunnel, which for the equipment used by the US Bureau of Reclamation is about 9 ft (3 m). The jacks should be designed to load the maximum of the full circumference of the lining with sufficient separation to allow displacement measurements and should have a bursting pressure and travel consistent with the anticipated loads and displacements. Stainless steel flat jacks in effective contact with 90 % of the area are recommended, with the maximum pressure capacity twice the design pressure.

AVA Documents
Document Sharing Hub

Full document details: ASTM D4506-21

6.5 *Load Measuring Equipment*—Load measuring equipment should consist of one or more hydraulic pressure gauges or transducers of a suitable range, capable of measuring the applied pressure with an accuracy better than ±2 %. Measurements are usually made by utilizing mechanical gauges. Care is required to guarantee the reliability of electric transducers and recording equipment, when used.

6.6 *Displacement Measuring Equipment*—Displacement measuring equipment to monitor rock movements radial to the tunnel should have an accuracy of at least ±0.0003 in. (0.1 mm) and resolution of at least 0.0001 in. (0.0025 mm).

6.6.1 Dial gauges can be used but require someone to enter the reaction frame area to read them rather than from a safer location and adds risks to the dial gauges being disturbed by test personnel, visitors, and even rats. Since the chamber area is within the reaction frame there may not be a lot of risk so this would be a professional judgement decision. Remote cameras on the gages could be used, but that would be a lot of additional equipment costs that might be greater than using electronic displacement gauges.

6.6.2 Multiple-position (six anchor points) borehole extensometers utilizing Practice D4403 should be used when possible. The directions of measurement should be normal to the axis of the tunnel. The multiple-position extensometers should be of sufficient length and configured, such that the deepest anchor can be considered a zero-reference point. This is usually at least three test-chamber diameters from the chamber lining.

NOTE 5—Measurements of movement should be related to a reference anchor rigidly secured in rock or a reference beam, well away from the loading zone's influence, and therefore considered a zero-deformation point.

7. Verification

7.1 The equipment and measurement systems should be part of the verification, and documentation shall be in accordance with standard quality assurance procedures.

7.2 The compliance of all equipment and apparatus with the performance specifications in Section 6 shall be verified.

8. Procedure

8.1 *Test Chamber:*

8.1.1 Select the test chamber location taking into consideration the rock conditions, particularly the orientation of the rock mass elements such as joints, bedding, and foliation in relation to the orientation of the proposed tunnel or opening for which results are required. Guide D420 can be useful when selecting test sites.

NOTE 6—The number of test sites or test specimens necessary to obtain a specific level of statistical results may be determined using Test Method E122. However, it may not be economically possible to achieve a particular confidence level for some test methods, and professional judgment may be necessary.

8.1.2 Excavate the test chamber by smooth wall (pre-split) blasting techniques to the required diameter for the reaction frame, with a length equal to at least three diameters. See Fig. 4.

8.1.3 Record the 2-d as well as 3-d geology of the chamber surface, including the nature, spacing, and orientation of discontinuities such as fractures, joint sets, bedding, foliation, or faults.

8.1.4 Record and protect, per the project plan, any specimens taken for laboratory and index testing, as required.

8.2 Core and log all instrumentation holes as follows:

8.2.1 Accurately mark locations for the extensometer holes along the longitudinal and periphery of the test chamber, making sure no interference between loading and measuring systems and according to a specific data collection plan. (See Fig. 5.)

8.2.2 *Cored Boreholes*—Drill the boreholes using diamond core techniques that facilitate obtaining continuous core and properly sized for the extensometer instrumentation.

8.2.3 *Core Logged*—Completely log the recovered core, emphasizing fractures and other mechanical non-homogeneities, including RQD (Test Method D6032) or any other suitable rock indexing or quality designation method.

8.2.4 Update geology mapping with drill log data.

8.3 *Extensometer Instrumentation:*

8.3.1 Install extensometers with a minimum of six points, and check the equipment when completed.

8.3.2 Use the geology and drill hole data to plan the extensometer anchor locations. Modify the depth and locations of extensometer anchors as needed to accommodate special rock mechanic issues and geologic features found during mapping and drilling exploration. Examples of special geologic features would be a shear zone or a fat clay-filled discontinuity or clay layer.

8.3.3 Place two anchors at a depth beyond the tunnel influence, appropriately spacing the other four anchors as close to the surface of the tunnel as possible.

8.3.4 Assemble the reaction frame and loading equipment around the periphery of the reaction frame. See Fig. 6.

8.3.5 Fill the annular space between the reaction frame, flat jacks, and the test chamber wall rock with concrete. See Fig. 7 and Fig. 8.

NOTE 7—It is considered good practice by some test personnel to make concrete test cylinders (Test Method C31/C31M) and test them for strength and modulus values that are recorded for the test site.

8.4 *Loading:*

8.4.1 Perform the test with at least three loading and unloading cycles, a higher maximum pressure being applied at each cycle. Typically, the maximum pressure applied is 1000 psi (7 MPa), depending on expected design loads and the design specifications for the reaction frame and flat jacks.

NOTE 8—In order to get the planned load applied to the rock, higher pressure is applied to the jacks because of the difference in diameter between the rock surface and the ring of jacks. See 9.1.

8.4.2 For each cycle, increase the pressure at an average rate of 100 psi/min (0.7 MPa/min) to the maximum for the cycle, taking not less than ten intermediate sets, approximately equally spaced load values, of load-displacement readings in order to define a set of pressure-displacement curves (see Fig.

AVA Documents Document Sharing Hub

Full document details: ASTM D4506-21