This international standard was developed in accordance with internationally recognized principles on standardization established in the Decision on Principles for the Development of International Standards, Guides and Recommendations issued by the World Trade Organization Technical Barriers to Trade (TBT) Committee.

Designation: D4696 – 18

Standard Guide for Pore-Liquid Sampling from the Vadose Zone[1]

This standard is issued under the fixed designation D4696; the number immediately following the designation indicates the year of original adoption or, in the case of revision, the year of last revision. A number in parentheses indicates the year of last reapproval. A superscript epsilon (ε) indicates an editorial change since the last revision or reapproval.

1. Scope*

1.1 This guide covers the equipment and procedures used for sampling pore-liquid from the vadose zone (unsaturated zone). The guide is limited to in situ techniques and does not include soil core collection and extraction methods for obtaining samples.

1.2 The term "pore-liquid" is applicable for liquids from aqueous pore-liquid to oil. However, the samplers described in this guide were designed, and are used to sample aqueous pore-liquids only. The abilities of these samplers to collect other pore-liquids may be quite different than those described.

1.3 Some of the samplers described in this guide are not currently commercially available. These samplers are presented because they may have been available in the past, and may be encountered at sites with established vadose zone monitoring programs. In addition, some of these designs are particularly suited to specific situations. If needed, these samplers could be fabricated.

1.4 The values stated in SI units are to be regarded as standard. No other units of measurement are included in this standard.

1.5 *This standard does not purport to address all of the safety concerns, if any, associated with its use. It is the responsibility of the user of this standard to establish appropriate safety, health, and environmental practices and determine the applicability of regulatory limitations prior to use.*

1.6 *This guide offers an organized collection of information or a series of options and does not recommend a specific course of action. This document cannot replace education or experience and should be used in conjunction with professional judgment. Not all aspects of this guide may be applicable in all circumstances. This ASTM standard is not intended to represent or replace the standard of care by which the adequacy of a given professional service must be judged, nor should this document be applied without consideration of a project's many unique aspects. The word "Standard" in the title of this document means only that the document has been approved through the ASTM consensus process.*

1.7 *This international standard was developed in accordance with internationally recognized principles on standardization established in the Decision on Principles for the Development of International Standards, Guides and Recommendations issued by the World Trade Organization Technical Barriers to Trade (TBT) Committee.*

2. Referenced Documents

2.1 *ASTM Standards:*[2]

D653 Terminology Relating to Soil, Rock, and Contained Fluids

D3740 Practice for Minimum Requirements for Agencies Engaged in Testing and/or Inspection of Soil and Rock as Used in Engineering Design and Construction

3. Terminology

3.1 *Definitions—*

3.1.1 For common definitions of terms in this standard, refer to Terminology D653.

3.2 *Definitions of Terms Specific to This Standard:*

3.2.1 *air entry value, n—in vadose zone*, the applied suction at which water menisci of the porous segment of a suction sampler break down, and air enters.

3.2.2 *bubbling pressure, n—in vadose zone*, the applied air pressure at which water menisci of the porous segment of a suction sampler break down, and air exits.

3.2.3 *cascading water, n—in groundwater*, perched groundwater that enters a well casing via cracks or uncovered perforations, trickling, or pouring down the inside of the casing.

3.2.4 *hydrophobicity, n—in vadose zone*, the property that defines a material as being water repellent. Water exhibits an obtuse contact angle with hydrophobic materials.

[1] This guide is under the jurisdiction of ASTM Committee D18 on Soil and Rock and is the direct responsibility of Subcommittee D18.21 on Groundwater and Vadose Zone Investigations.

Current edition approved Nov. 15, 2018. Published November 2018. Originally approved in 1992. Last previous edition approved in 2008 as D4696 – 92(2008), which was withdrawn January 2017 and reinstated in November 2018. DOI: 10.1520/D4696-18.

[2] For referenced ASTM standards, visit the ASTM website, www.astm.org, or contact ASTM Customer Service at service@astm.org. For *Annual Book of ASTM Standards* volume information, refer to the standard's Document Summary page on the ASTM website.

*A Summary of Changes section appears at the end of this standard

Copyright © ASTM International, 100 Barr Harbor Drive, PO Box C700, West Conshohocken, PA 19428-2959. United States

Documents
Document Sharing Hub
Full document details: ASTM D4696-18

3.2.5 *matric potential, n—in vadose zone*, the energy needed to extract water from a soil against the capillary and adsorptive forces of the soil matrix.

3.2.6 *pore-liquid, n—in vadose zone*, liquid that occupies an open space between solid soil particles. Within this guide, pore-liquid is limited to aqueous pore-liquid; that includes water and its solutes.

3.2.7 *pore-liquid tension*—see *soil-water pressure*.

3.2.8 *soil-water pressure, n—in vadose zone*, the pressure on the water in a soil-water system, as measured by a piezometer for a saturated soil, or by a tensiometer for an unsaturated soil.

3.2.9 *tensiometer, n—in vadose zone*, a device for measuring soil-water matric potential (or tension or suction) of water in soil in situ; a porous, permeable ceramic cup connected through a water filled tube to a pressure measuring device.

3.2.10 *tremie, n—in groundwater*, the method whereby materials are emplaced in the bottom of a borehole with a small diameter pipe.

3.3 *Terminology from D653:*

3.3.1 The following terms are found in D653 and are presented here as a convenience to users.

3.3.1.1 *cation exchange capacity, CEC, n—in soils*, is a pH dependent measure of the negative electrical charge present on the surfaces of soil minerals, particularly clay minerals, and on soil organic materials, especially humic compounds, capable of dynamically adsorbing positively charged ions (cations) and polar compounds.

3.3.1.1.1 *Discussion*—The units for CEC are typically in milliequivalents per 100 grams of oven-dry soil (meq/100 g). The SI units for CEC are centimoles of charge per kilogram of oven-dry soil (cmolc/kg).

3.3.1.2 *exchange capacity*—the capacity to exchange ions as measured by the quantity of exchangeable ions in a soil or rock.

3.3.1.2.1 *Discussion*—Exchange capacity is only significant in materials having high specific surface area, such as clay minerals.

3.3.1.3 *hydraulic gradient, i [D], n*—in hydraulics, the change in total head (head loss, Δh) per unit distance (L) in the direction of fluid flow, in which $i = \Delta h/L$.

3.3.1.3.1 *Discussion*—In most cases, the application of hydraulic gradient applies to flowing water in a saturated test specimen or aquifer consisting of soil or rock, or both. The literature typically does not use $\Delta h/L$ to indicate head loss; however, there is a need to emphasize that head loss is a change (delta), Δ, in total head.

3.3.1.4 *vadose zone, n—in geohydrology/hydrogeology*, the hydrogeological region extending from the soil surface to the top of the water (groundwater) table.

3.3.1.4.1 *Discussion*—The capillary fringe is included in this zone. Overall movement of water is vertical in the vadose zone. There can be more than one vadose zone in special cases, such as when there is perched groundwater. The vadose zone is commonly referred to as the "unsaturated zone" or "zone of aeration." These alternate names are inadequate as they do not take into account locally saturated regions, such as perched groundwater.

4. Summary of Guide

4.1 Pores in the vadose zone can be saturated or unsaturated. Some samplers are designed to extract liquids from unsaturated pores; others are designed to obtain samples from saturated pores (for example, perched groundwater) or saturated macropores (for example, fissures, cracks, and burrows). This guide addresses these categories. The sampler types discussed are:

4.1.1 Suction samplers (unsaturated sampling), (see Section 7),

4.1.2 Free drainage samplers (saturated sampling), (see Section 8),

4.1.3 Perched groundwater samplers (saturated sampling), (see Section 9), and

4.1.4 Experimental absorption samplers (unsaturated sampling), (see Section 10).

4.2 Most samplers designed for sampling liquid from unsaturated pores may also be used to sample from saturated pores. This is useful in areas where the water table fluctuates, so that both saturated and unsaturated conditions occur at different times. However, samplers designed for sampling from saturated pores cannot be used in unsaturated conditions. This is because the liquid in unsaturated pores is held at less than atmospheric pressures. According to Richards Outflow Principle that states that pore-liquid will not generally flow into an air-filled cavity (at atmospheric pressure) in unsaturated soil.

4.3 The discussion of each sampler is divided into specific topics that include:

4.3.1 Operating principles,

4.3.2 Description,

4.3.3 Installation,

4.3.4 Operation, and

4.3.5 Limitations.

5. Significance and Use

5.1 Sampling from the vadose zone may be an important component of some groundwater monitoring strategies. It can provide information regarding contaminant transport and attenuation in the vadose zone. This information can be used for mitigating potential problems prior to degradation of a groundwater resource (**1**).[3]

5.2 The choice of appropriate sampling devices for a particular location is dependent on various criteria. Specific guidelines for designing vadose zone monitoring programs have been discussed by Morrison (**1**), Wilson (**2**), Wilson (**3**), Everett (**4**), Wilson (**5**), Everett, et al (**6**), Wilson (**7**), Everett, et al (**8**), Everett, et al (**9**), Robbins, et al (**10**), Merry and Palmer (**11**), U.S. EPA (**12**), Ball (**13**), and Wilson (**14**). In general, it is prudent to combine various unsaturated and free

[3] The boldface numbers in parentheses refer to the list of references at the end of this standard.

AVA Documents
Document Sharing Hub

Full document details: ASTM D4696-18

drainage samplers into a program, so that the different flow regimes may be monitored.

5.3 This guide does not attempt to present details of installation and use of the equipment discussed. However, an effort has been made to present those references in which the specific techniques may be found.

NOTE 1—The quality of the result produced by this standard is dependent on the competence of the personnel performing it and the suitability of the equipment and facility used. Agencies that meet the criteria of Practice D3740 are generally considered capable of competent and objective testing/sampling/observation/ and the like. Users of this standard are cautioned that compliance with Practice D3740 does not itself guarantee reliable results. Reliable results depend on many factors; D3740 provides a means of evaluating some of those factors.

6. Criteria for Selecting Pore-Liquid Samplers

6.1 Decisions on the types of samplers to use in a monitoring program should be based on consideration of a variety of criteria that include the following:

6.1.1 Needed sampling depths,
6.1.2 Needed sample volumes,
6.1.3 Soil characteristics,
6.1.4 Chemistry and biology of the liquids to be sampled,
6.1.5 Moisture flow regimes,
6.1.6 Durability of the samplers,
6.1.7 Reliability of the samplers,
6.1.8 Climate,
6.1.9 Installation requirements of the samplers,
6.1.10 Operational requirements of the samplers,
6.1.11 Commercial availability, and
6.1.12 Costs.

6.2 Some of these criteria are discussed in this guide. However, the ability to balance many of these factors against one another can only be obtained through field experience.

7. Suction Samplers

7.1 Table 1 presents the various types of suction samplers. The range of operating depths is the major criterion by which suction samplers are differentiated. Accordingly, the categories of suction samplers are as follows:

7.1.1 *Vacuum Lysimeters*—These samplers are theoretically operational at depths less than about 7.5 m. The practical operational depth is 6 m under ideal conditions.

7.1.2 *Pressure-Vacuum Lysimeters*—These samplers are operational at depths less than about 15 m.

7.1.3 *High Pressure-Vacuum Lysimeters*—(also known as pressure-vacuum lysimeters with transfer vessels) These samplers are normally operational down to about 46 m, although installations as deep as 91 m have been reported (**15**).

7.1.4 *Suction Lysimeters with Low Bubbling Pressures (Samplers With PTFE Porous Sections)*—These samplers are available in numerous designs that can be used to maximum depths varying from about 7.5 to 46 m.

NOTE 2—The samplers of 7.1.1, 7.1.2, 7.1.3, and 7.1.4 are referred to collectively as suction lysimeters. Within this standard, lysimeter is defined as a device used to collect percolating water for analyses (**16**).

7.1.5 *Filter Tip Samplers*—These samplers theoretically have no maximum sampling depth.

7.1.6 *Experimental Suction Samplers*—The samplers have limited field applications at the present time. They include cellulose-acetate hollow-fiber samplers, membrane filter samplers, and vacuum plate samplers. They are generally limited to depths less than about 7.5 m.

7.2 *Operating Principles:*

7.2.1 *General:*

7.2.1.1 Suction lysimeters consist of a hollow, porous section attached to a sample vessel or a body tube. Samples are obtained by applying suction to the sampler and collecting pore-liquid in the body tube. Samples are retrieved by a variety of methods.

7.2.1.2 Unsaturated portions of the vadose zone consist of interconnecting soil particles, interconnecting air spaces, and interconnecting liquid films. Liquid films in the soil provide

TABLE 1 Suction Sampler Summary

Sampler Type	Porous Section Material	Maximum[A] Pore Size (µm)	Air Entry Value (cbar)	Operational Suction Range (cbar)	Maximum Operation Depth (m)
Vacuum lysimeters	Ceramic	1.2 to 3.0 (1)[A]	>100	<60 to 80	<7.5
	PTFE	15 to 30 (2)[A]	10 to 21	<10 to 21	<7.5
	Stainless steel	NA[B]	49 to 5	49 to 5	<7.5
Pressure-vacuum lysimeters	Ceramic	1.2 to 3.0 (1)[A]	>100	<60 to 80	<15
	PTFE	15 to 30 (2)[A]	10 to 21	<10 to 21	<15
High pressure-vacuum lysimeters	Ceramic	1.2 to 3.0 (1)[A]	>100	<60 to 80	<91
	PTFE	15 to 30 (2)[A]	10 to 21	<10 to 21	<91
Filter tip samplers	Polyethylene	NA[B]	NA[B]	NA[B]	None
	Ceramic	2 to 3 (1)	>100	<60 to 80	<7.5
	Stainless steel	NA[B]	NA[B]	NA[B]	none
Cellulose-acetate hollow-fiber samplers	Cellulose Acetate Non cellulosic	<2.8	>100	<60 to 80	<7.5
	Polymer	<2.8	>100	<60 to 80	<7.5
Membrane filter samplers	Cellulose Acetate	<2.8	>100	<60 to 80	<7.5
	PTFE	2 to 5	NA[B]	NA[B]	<7.5
Vacuum plate samplers	Alundum	NA[B]	NA[B]	NA[B]	<7.5
	Ceramic	1.2 to 3.0	>100	60 to 80	<7.5
	Fritted glass	4 to 5.5	NA[B]	NA[B]	<7.5
	Stainless steel	NA[B]	49 to 5	49 to 5	<7.5

[A] Pore size determined by bubbling pressure (1) or mercury intrusion (2).
[B] NA = Not available.

AVA Documents
Document Sharing Hub

Full document details: ASTM D4696-18

hydraulic contact between the saturated porous section of the sampler and the soil (see Fig. 1). When suction greater than the soil pore-liquid tension is applied to the sampler, a pressure potential gradient towards the sampler is created. If the meniscuses of the liquid in the porous segment are able to withstand the applied suction (depending on the maximum pore sizes and hydrophobicity/hydrophilicity), liquid moves into the sampler. The ability of the meniscuses to withstand a suction decreases with increasing pore size and also with increasing hydrophobicity of the porous segment (see 7.6). If the maximum pore sizes are too large and hydrophobicity too great, the meniscuses are not able to withstand the applied suction. As a result, they break down, hydraulic contact is lost, and only air enters the sampler. As described in 7.6, ceramic porous segments are hydrophilic and the maximum pore sizes are small enough to allow meniscuses to withstand the entire range of sampling suctions. Presently available polytetrafluoroethylene (PTFE) porous segments are hydrophobic, the maximum pore sizes are larger, and only a very limited range of sampling suction can be applied before meniscuses break down and sampling ends (see 7.6.1.3). Therefore, samplers made with PTFE porous segments may be used only for sampling soils with low pore-liquid tensions (**12, 17**).

7.2.1.3 The ability of a sampler to withstand applied suctions can be directly measured by its bubbling pressure. The bubbling pressure is measured by saturating the porous segment, immersing it in water, and pressurizing the inside of the porous segment with air. The pressure at which air starts bubbling through the porous segment into the surrounding water is the bubbling pressure. The magnitude of the bubbling pressure is equal to the magnitude of the maximum suction that can be applied to the sampler before air entry occurs (air entry value). Because the bubbling pressure is a direct measure of how a sampler will perform, it is more useful than measurement of pore size distributions.

7.2.1.4 As soil pore-liquid tensions increase (low pore-liquid contents), pressure gradients towards the sampler decrease. Also, the soil hydraulic conductivity decreases exponentially. These result in lower flow rates into the sampler. At pore-liquid tensions above about 60 (for coarse grained soils) to 80 cbar (for fine grained soils), the flow rates are effectively zero and samples cannot be collected.

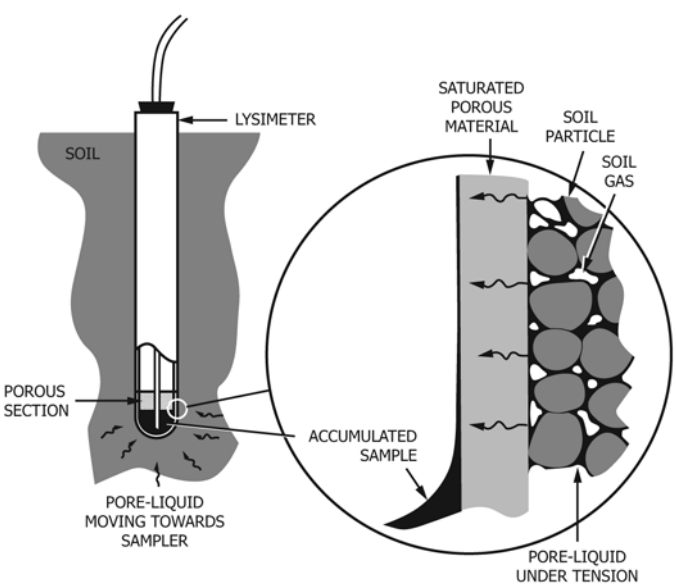

FIG. 1 Porous Section/Soil Interactions

7.2.2 *Suction Lysimeters:*

7.2.2.1 Vacuum lysimeters directly transfer samples to the surface via a suction line. Because the maximum suction lift of water is about 7.5 m, these samplers cannot be operated below this depth. In reality, suction lifts of 6 m should be considered a practical maximum depth.

7.2.2.2 Samples may be retrieved using the same technique as for vacuum lysimeters or, for deeper applications, the sample is retrieved by pressurizing the sampler with one line; this pushes the sample up to the surface in a second line.

7.2.2.3 High pressure-vacuum lysimeters operate in the same manner as pressure-vacuum lysimeters. However, they include an inbuilt check transfer vessel or a chamber between the sampler and the surface. This prevents sample loss through the porous section during pressurization, and prevents the potential cup damage due to overpressurization.

7.2.2.4 Suction lysimeters with low bubbling pressures are available in each of the three previous designs. The only difference between these samplers and the three previous designs is that these porous sections are made with PTFE. The low bubbling pressure (and hence large pore size or hydrophobicity, or both) of PTFE constrains these samplers to soils that are nearly saturated (see 7.2.1.2 and 7.6.1.3).

7.2.3 *Filter Tip Samplers*—Samples are collected from a filter tip sampler by lowering an evacuated sample vial down an access tube to a permanently emplaced porous tip. The vial is connected to the porous tip and sample flows through the porous section and into the vial. Once full, the vial is retrieved.

7.2.4 *Experimental Suction Samplers*—Experimental suction samplers generally operate on the same principle as vacuum lysimeters with different combinations of porous materials to enhance hydraulic contact. The samplers are generally fragile and difficult to install. As with vacuum lysimeters, they are generally limited to depths of less than about 7.5 m.

7.3 *Description:*

7.3.1 *Vacuum Lysimeters:*

7.3.1.1 Vacuum lysimeters generally consist of a porous cup mounted on the end of a tube, similar to a tensiometer. The cup is attached to the tube with adhesives (**18**[4]) or with "V" shaped flush threading sealed with an "O" ring. A stopper is inserted into the upper end of the body tube and fastened in the same manner as the porous cup or, in the case of rubber stoppers, inserted tightly (**12**). To recover samples, a suction line is inserted through the stopper to the base of the sampler. The suction line extends to the surface and connects to a sample bottle and suction source in series. Body tubes up to 1.8 m long have been reported (**15**) (see Fig. 2).

[4] This reference is manufacturer's literature, and it has not been subjected to technical review.

AVA Documents
Document Sharing Hub

Full document details: ASTM D4696-18

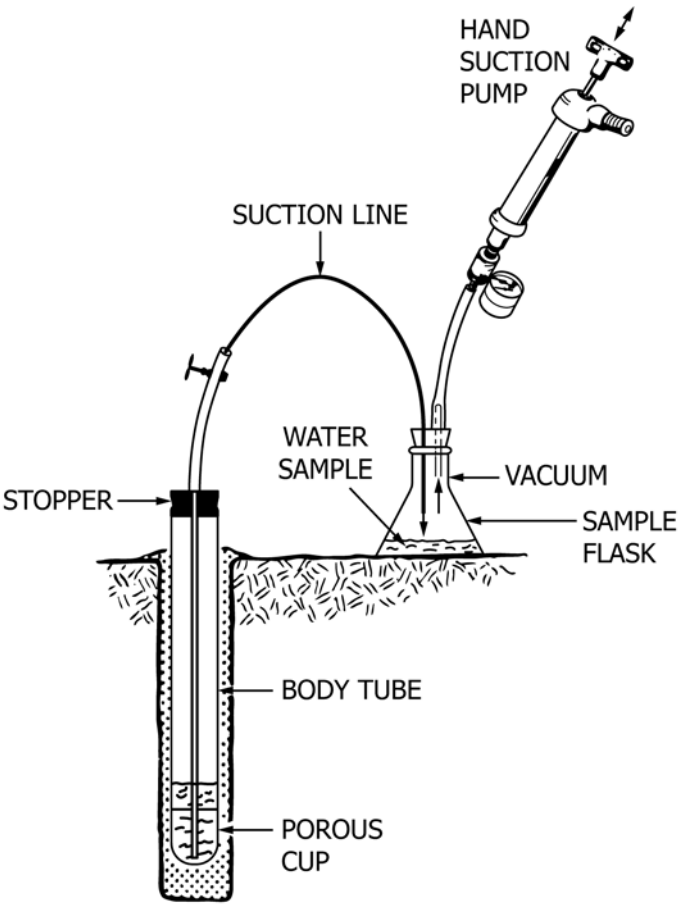

FIG. 2 Vacuum Lysimeter

7.3.1.2 Harris and Hansen (**19**) described a vacuum lysimeter with a 6 mm by 65 mm ceramic porous cup designed for intensive sampling in small areas.

7.3.1.3 A variety of materials have been used for the porous segment including nylon mesh (**20**), fritted glass (**21**), sintered glass (**22**), Alundum (manufacturer name), stainless steel (**23**[4]), and ceramics (1.2 to 3.0 µm max pore size) (**18**[4]). The sampler body tube has been made with PVC, ABS, acrylic, stainless steel (**24**) and PTFE (**18**[4], **25**[4]). Ceramic porous segments are attached with epoxy adhesives or with flush threading. The stopper is typically made of rubber (**12**), neoprene, or PTFE. The outlet lines are commonly PTFE, rubber, polyethylene, polypropylene, vinyl, nylon, and historically, copper. Fittings and valves are available in brass or stainless steel.

7.3.2 *Pressure-Vacuum Lysimeters:*

7.3.2.1 These samplers were developed by Parizek and Lane (**26**) for sampling deep moving pollutants in the vadose zone. The porous segment is usually a porous cup at the bottom of a body tube. The porous cup is attached with epoxy adhesives (**18**[4]) or with "V" shaped flush threading sealed with an "O" ring (**25**[4]). Two lines are forced through a two-hole stopper sealed into the upper end of the body tube. The discharge line extends to the base of the sampler and the pressure-vacuum line terminates a short distance below the stopper. At the surface, the discharge line connects to a sample bottle and the pressure-vacuum line connects to a pressure-vacuum pump. Designs are available that do not use a stopper but rather an "O" ring sealed, flush threaded top plug (**25**[4]). Tubing lines to the surface are attached to the top plug with threaded tubing fittings of appropriate materials. Body tubes are commonly available with 2.2 and 4.8 cm diameters and in a variety of lengths (see Fig. 3). The sampler and its components have been made out of the same materials used for vacuum lysimeters.

7.3.2.2 These samplers can retrieve samples from depths below 7.5 m because pressure is used for retrieval. However, during pressurization some of the sample is forced back out of the cup. At depths over about 15 m, the volume of sample lost in this fashion may be significant. In addition, at depths over about 15 m, pressures needed to bring the sample to the surface may be high enough to damage the cup or to reduce its hydraulic contact with the soil (**27**, **28**). Rapid pressurization causes similar problems. Morrison and Tsai (**29**) developed a tube lysimeter with the porous section located midway up the body tube instead of at the bottom (see Fig. 4). This design mitigates the problem of sample being forced back through the cup. However, it does not prevent problems with porous segment damage due to overpressurization or rapid pressurization. The sleeve lysimeter (that is no longer available) was a modification to this design for use with a monitoring well (**1**) (see Fig. 5). Another modification is the casing lysimeter that consists of several tube lysimeters threaded into one unit (see Fig. 6). This arrangement allows precise spacing between units (**30**).

7.3.2.3 Nightingale, et al (**31**) described a design that allows incoming samples to flow into a portion of the sampler not in

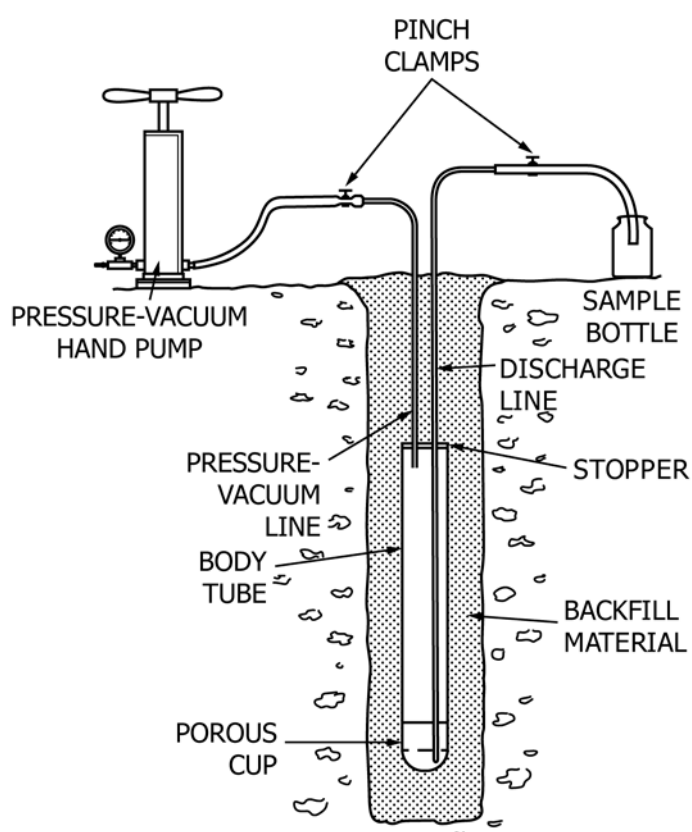

FIG. 3 Pressure-Vacuum Lysimeter

AVA Documents
Document Sharing Hub

Full document details: ASTM D4696-18

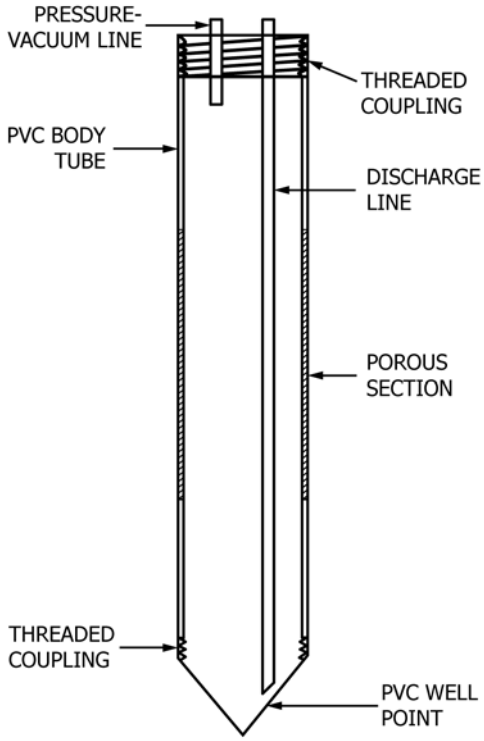

FIG. 4 Tube Pressure-Vacuum Lysimeter

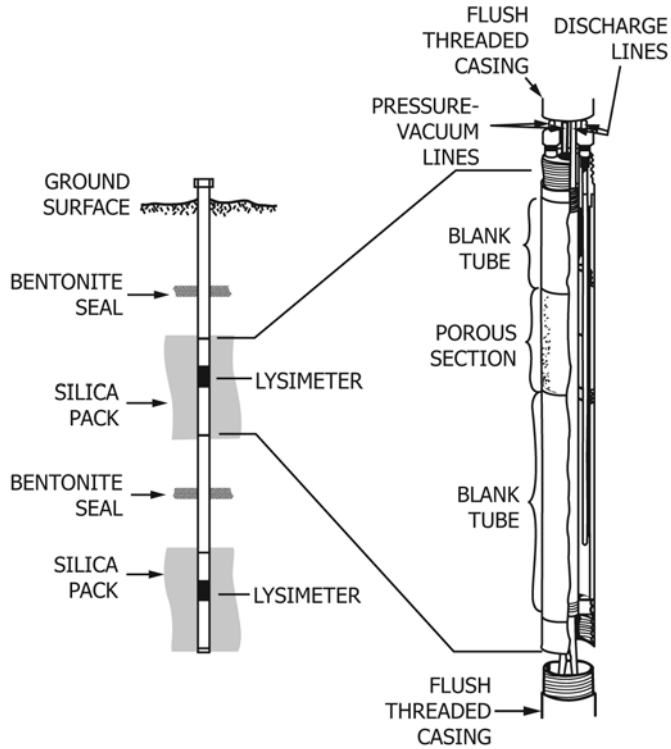

FIG. 6 Casing Lysimeter

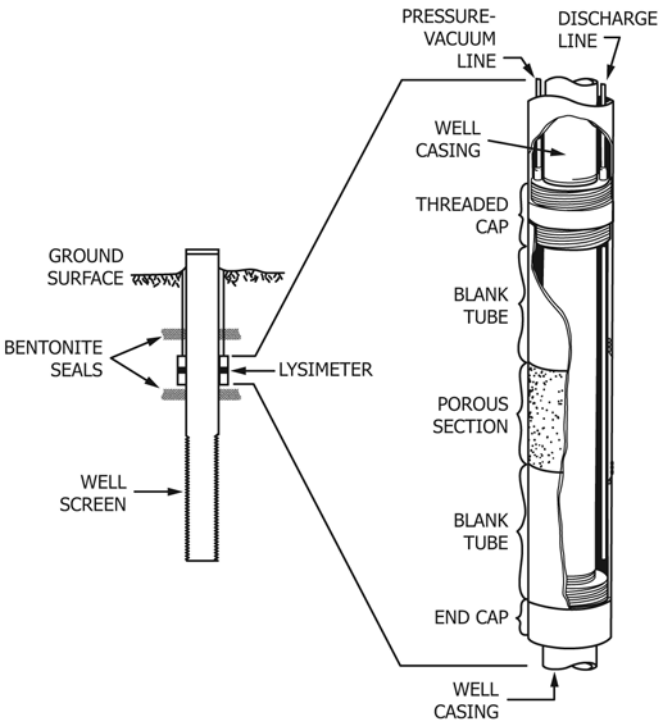

FIG. 5 Sleeve Lysimeter

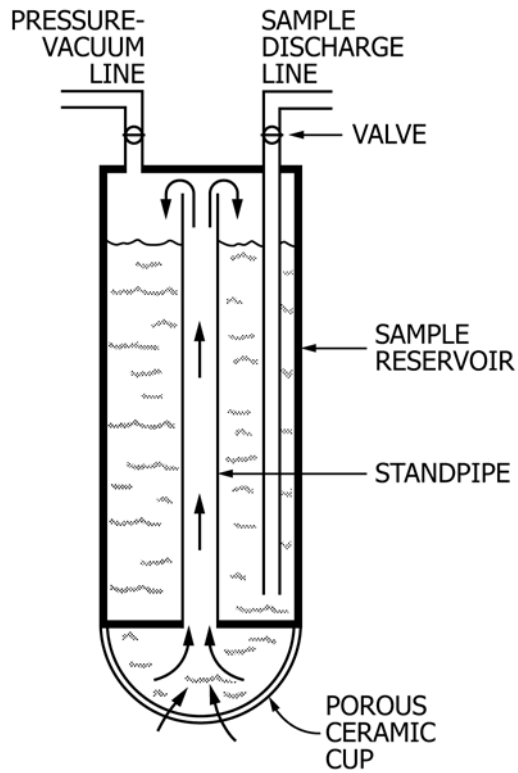

FIG. 7 Modified Pressure-Vacuum Lysimeter

contact with the basal, porous ceramic cup (see Fig. 7). The ceramic cup is wedged into the body tube without adhesives or threading. The sampler was used to sample the vadose zone, the capillary fringe, and the fluctuating water table in a recharge area. Knighton and Streblow (**32**) reported a sampler with the porous cup upon the top of a chamber. This design was used with cup diameters ranging from 7.6 to 12.7 cm (see Fig. 8). These designs also allow pressurization for sample retrieval without significant liquid loss. However, because the porous

AVA Documents
Document Sharing Hub

Full document details: ASTM D4696-18

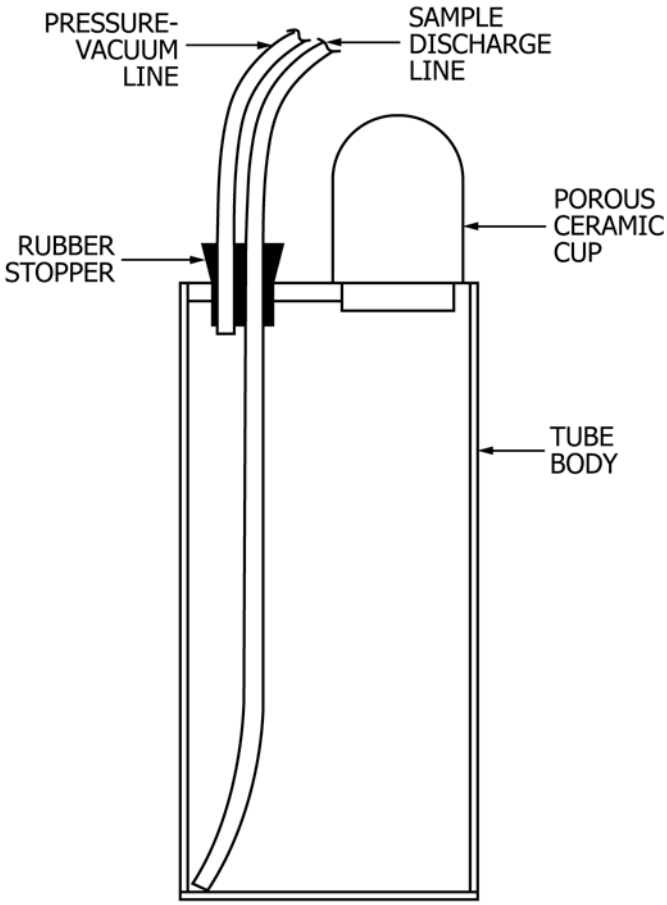

FIG. 8 Knighton and Streblow-Type Vacuum Lysimeter

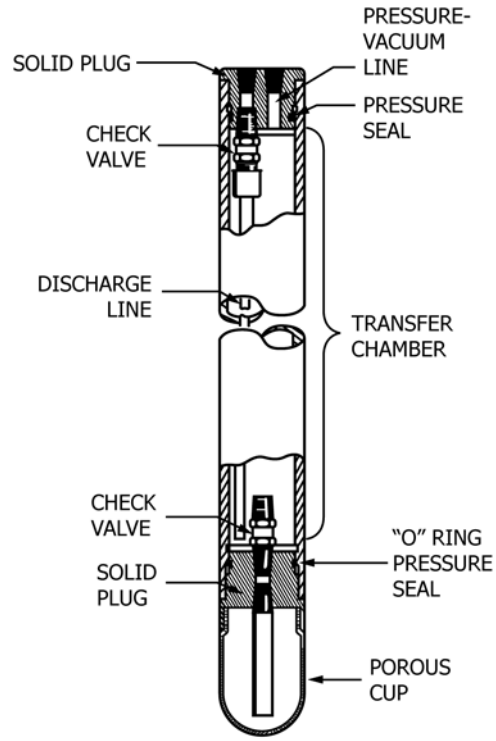

FIG. 9 High Pressure-Vacuum Lysimeter

cups are open to the rest of the samplers, potential damage due to overpressurization or rapid pressurization is still a problem.

7.3.3 *High Pressure-Vacuum Lysimeters (Lysimeters with a Transfer Vessel)*—High pressure-vacuum lysimeters overcome the problems of fluid loss and overpressurization through the use of an attached chamber or a connected transfer vessel (see Fig. 9). The porous segment is usually a porous cup at the bottom of the body tube. The cup is attached with epoxy adhesives (**18**[4]) or with "V" shaped flush threading sealed with an "O" ring (**25**[4]). In the attached chamber design, the body tube is separated into two chambers connected by a one-way check valve. A pressure-vacuum line and a discharge line enter through a two-hole plug at the top of the body tube. The pressure-vacuum line terminates below the plug. The discharge line extends to the bottom of the upper chamber. The transfer vessel design is similar. However, the vessel and body tube are integral components joined by a common double threaded, "O" ring sealed plug containing a check valve. Body tube diameters range from 2.7 to 8.9 cm outside diameter. Total sampler lengths commonly range from 15.2 to 182.9 cm. A threaded top plug allows attachment of casing to the lysimeter. This facilitates accurate placement and provides long-term protection for the tubing lines. The samplers and their components have been made out of the same materials as vacuum lysimeters.

7.3.4 *Suction Lysimeters with Low Bubbling Pressures (Samplers with PTFE Porous Sections)*—Designs are available in each of the three categories described in 7.3.1, 7.3.2, and 7.3.3. The only difference between this group of samplers and the previous three samplers is that PTFE is used for the porous sections of this group of samplers (**25**[4]). The porous PTFE is attached with "V" shaped flush threading sealed with an "O" ring.

7.3.5 *Filter Tip Samplers:*

7.3.5.1 Filter tip samplers consist of two components: a permanently installed filter tip, and a retrievable glass sample vial. The filter tip includes a pointed end to help with installation, a porous section, a nozzle, and a septum. The tip is threaded onto extension pipes that extend to the surface. The sample vial includes a second septum. When in use, the vial is seated in an adaptor that includes a disposable hypodermic needle to penetrate both the septa, allowing sample to flow from the porous segment into the vial (see Fig. 10). Extension pipes vary from 2.5 to 5.1 cm inside diameter. Vial volumes range from 35 to 500 mL (**32**[4]).

7.3.5.2 The body of the filter tip is made of thermoplastic, stainless steel, or brass. The attached porous section is available in high density polyethylene, sintered ceramic, or sintered stainless steel. The septum is made of natural rubber, nitrile rubber, or fluororubber (**32**[4]).

7.3.6 *Experimental Suction Samplers:*

7.3.6.1 Cellulose-acetate, hollow-fiber samplers were described by Jackson, et al (**33**) and Wilson (**3**). A sampler consists of a bundle of these flexible, hollow fibers (<2.8 µm max pore size) pinched shut at one end and attached to a suction line at the other end. The suction line leads to the surface and attaches to a sample bottle and source of suction in the same manner as a vacuum lysimeter (see Fig. 11). The fibers, that are analogous to the porous sections of vacuum

Document Sharing Hub

Full document details: ASTM D4696-18

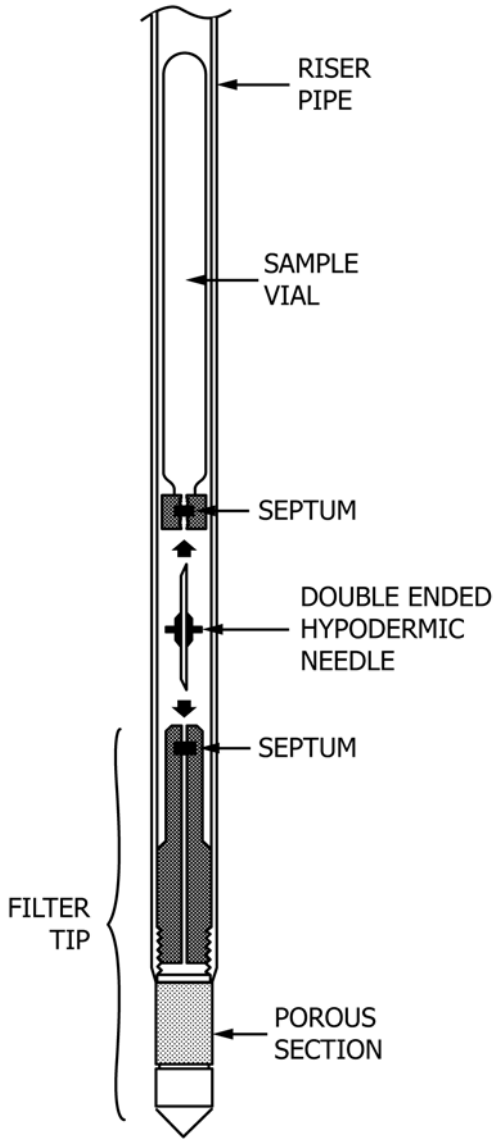

FIG. 10 Filter Tip Sampler

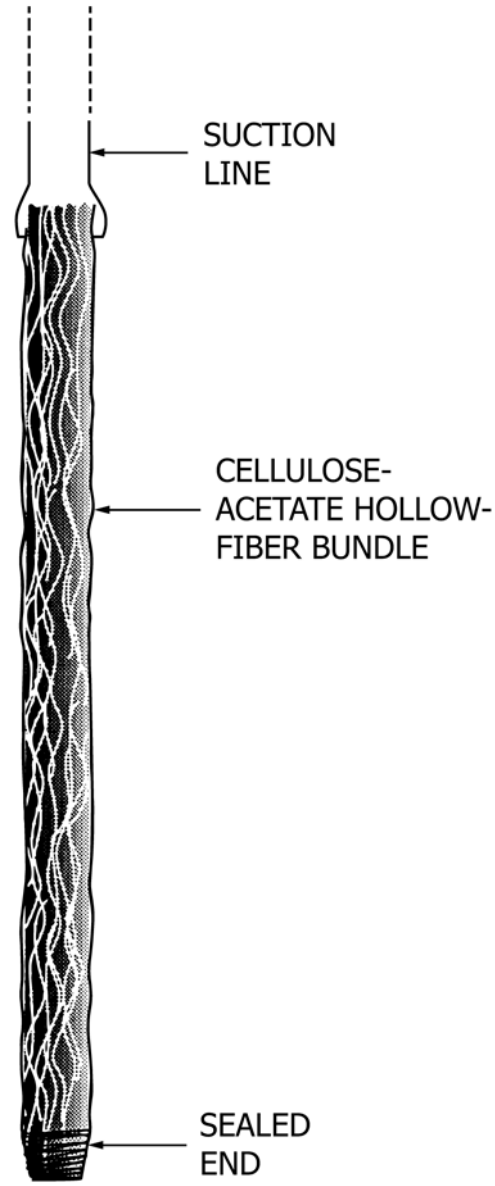

FIG. 11 Cellulose-Acetate Hollow-Fiber Sampler

lysimeters, have outside diameters of up to 250 µm (**33**). Levin and Jackson (**34**) described similar fibers made from a noncellulosic polymer solution (max pore size <2.8 µm). Those fibers have dense inner layers surrounded by open celled, spongy layers with diameters ranging from 50 to 250 µm.

7.3.6.2 Membrane filter samplers were described by Morrison (**1**), Everett and Wilson (**6**), U.S. EPA (**12**) and Stevenson (**35**). A sampler consists of a membrane filter of polycarbonate, cellulose acetate (<2.8 µm max pore size), cellulose nitrate or PTFE (2 to 5 µm max pore size); mounted in a "swinnex" type filter holder (**35**, **36**, **37**[4]). The filter rests on a glass fiber prefilter. The prefilter rests on a glass fiber "wick" that in turn sits on a glass fiber collector. The collector is in contact with the soil and extends the sampling area of the small diameter filter (see Fig. 12 and 7.5.1.6). A suction line leads from the filter holder to the surface. At the surface, the suction line is attached to a sample bottle and suction source in a manner similar to vacuum lysimeters.

7.3.6.3 A vacuum plate sampler consists of a flat porous disk fitted with a nonporous backing attached to a suction line that leads to the surface (see Fig. 13). Plates are available in diameters ranging from 4.3 to 25.4 cm and custom designs are easily arranged (**1**, **18**[4]). Plates are available in alundum, porous stainless steel (**23**[4]), ceramic (1.2 to 3.0 µm max pore size) or fritted glass (4 to 5.5 µm max pore size) (**38**[4], **6**, **39**, **40**, **41**, **42**, **43**, **44**). The nonpermeable backing can be a fiberglass resin, glass, plastic, or butyl rubber.

7.3.7 *Comments:*

7.3.7.1 When some ceramic cups are glued to the inner wall of the body tube in a suction lysimeter, an inner lip is formed (**45**). As the discharge line is pushed through the stopper at the top of the sampler, it may catch on this lip and the operator may conclude that the line has reached the bottom of the ceramic cup (see Fig. 14). As a result, an 80 mL error can occur in sampling rate determinations. This 80 mL of fluid accumulates

AVA Documents
Document Sharing Hub

Full document details: ASTM D4696-18

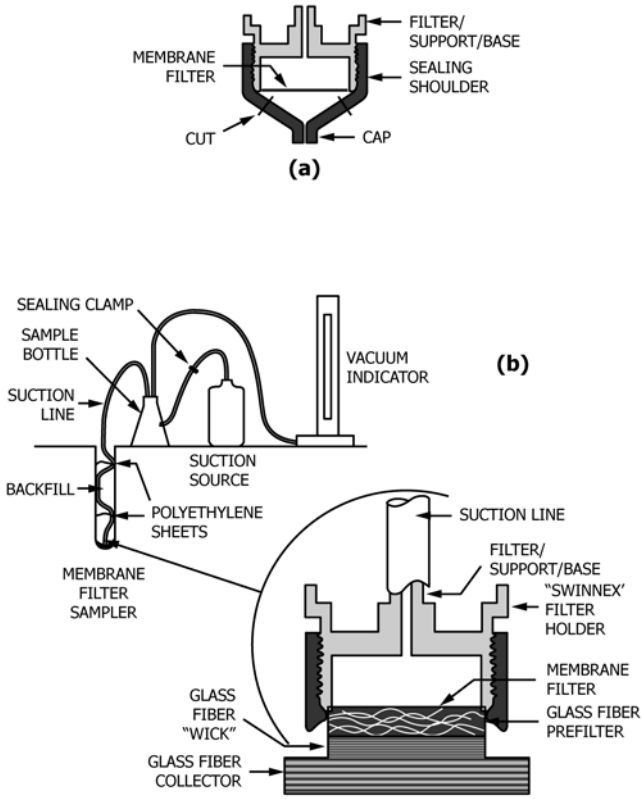

FIG. 12 Membrane Filter Sampler; (*a*) Preparation of Filter Sampler; and (*b*) Installation of Filter Sampler

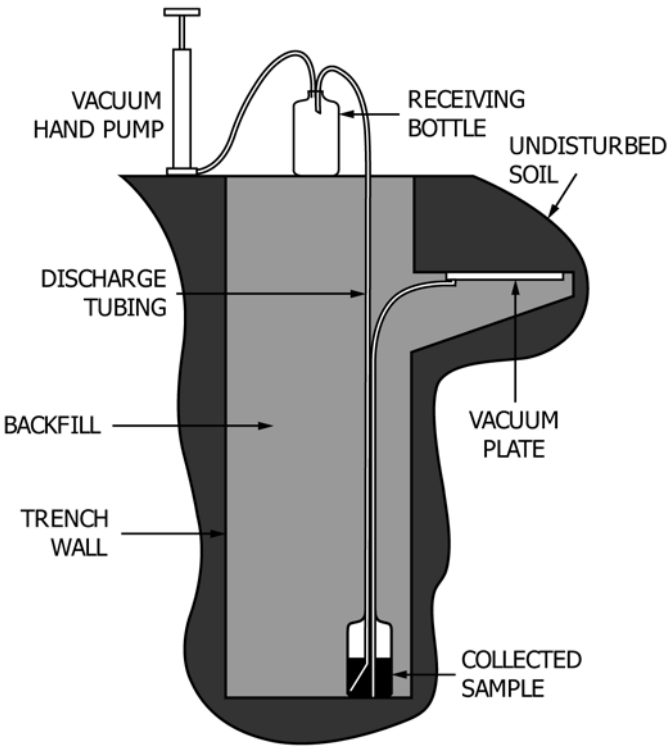

FIG. 13 Vacuum Plate Sampler Installation

in the cup, is not removed during sampling, and will cause cross contamination between sampling events. Soil moisture

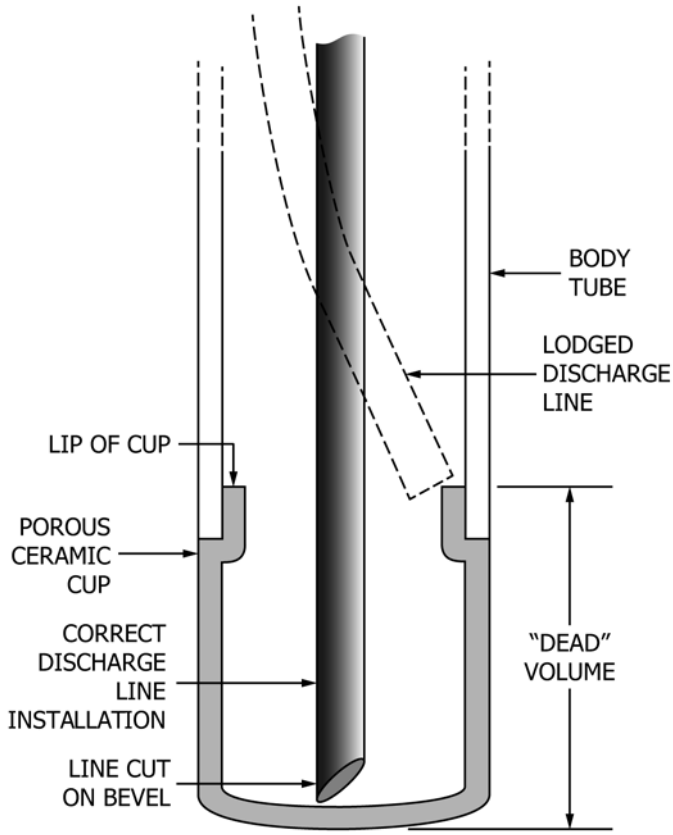

FIG. 14 Location of Potential Dead Volume in Suction Lysimeter

(**18**[4]) suggested that the line can be kept from catching by cutting its tip at an angle. In all-PTFE suction lysimeters, the discharge line is a rigid PTFE tube extending to the bottom of the cup. This results in a zero accumulation of fluid. Older samplers with PTFE porous segments and PVC body tubes have a discharge line that does not extend fully to the bottom. This problem has been corrected in newer PTFE and PVC samplers (**25**[4]). This results in a 34 mL accumulation of fluid (**12**). Filter tip samplers develop an 8 mL accumulation of fluid. Haldorsen, et al (**46**) suggested collecting and discarding an initial sample to purge this accumulated fluid.

7.3.7.2 Because samplers are often handled roughly during installation, durability and ruggedness are important. It has been shown that PTFE has a higher impact strength than ceramics which need to be installed with care (**25**[4]). It has also been found that PTFE threads and ceramic threads (when used) are susceptible to leakage, and should be securely sealed with pipe threading tape (**45**). TFE-fluorocarbon (PTFE) tape is not recommended in square threaded joints since the tape is designed for tapered "V" threaded compression joints.

7.3.7.3 As described above, porous sections can be made from various materials. These materials have physical and chemical limitations that should be considered when designing a monitoring program. Physical limitations are described in 7.6.1. Chemical limitations are described in 7.6.2.

7.4 *Installation Methods:*

7.4.1 *Pre-Installation:*

Documents
Document Sharing Hub

Full document details: ASTM D4696-18

7.4.1.1 As demonstrated by Neary and Tomassini (47), new samplers may be contaminated with dust during manufacturing. In order to reduce chemical interferences from substances on the porous sections, U.S. EPA (12) recommended preparation of ceramic units prior to installation following procedures originally developed by Wolff (48), modified by Wood (49) and recommended by Neary and Tomassini (47). The process involves passing hydrochloric acid (HCl) (for example, 8*N*) through the porous sections. This is followed by flushing with distilled water until the specific conductance of the outflowing water is within 2 % of the inflowing water. Debyle, et al (50) found (in agreement with 49 and 51) that flushing with HCl strips cations off of the ceramic. This results in an initial adsorption of cations from pore-liquid onto the ceramic surface. This continues until the cation exchange capacity (CEC) of the ceramic has been satisfied. The effect is not reduced by distilled water flushing after the acid flushing. Therefore, they suggested that the sampler also be flushed, prior to installation, with a solution similar in composition to the expected soil solution. Alternately, the first sample after installation could be discarded (see 7.5.2.1). Bottcher, et al (52) attributed increased adsorption of PO_4 to the acid leaching process. Therefore, they recommended a thorough flushing with a PO_4 solution of approximately the same concentration as that found in the soil solution, rather than the acid leaching procedure, when sampling for PO_4. Peters and Healy (53) used H_2SO_4 rather than HCl.

7.4.1.2 Hydrochloric acid may corrode valves within PVC and ceramic high pressure-vacuum lysimeters. Therefore, the porous segment flushing for these designs should be performed prior to attachment if practicable. The maximum suction which can be applied is one atmosphere, therefore the flushing process will be slow if suction is used to draw HCl through the porous segment. The flushing can be performed more rapidly if the porous segment is filled with HCl and pressurized to force the acid out of the porous segment since more than one atmosphere of pressure can be applied. This procedure can only be used if the cups are not attached. Care should be taken to prevent overpressurization that might damage the porous section.

7.4.1.3 Corning Laboratories (38[4]) recommended washing fritted glass with hot HCl followed by a distilled water rinse. Cleaning procedures for Alundum have not been reported, although an acid and water rinse procedure similar to that for ceramic would appear to be appropriate (1). Timco (25[4]) described cleaning procedures for PTFE. The method includes passing 0.5 L of distilled water through the material. An I.P.A. bath followed by another in hydrogen peroxide or rinsing with HCl followed by a distilled water rinse.

7.4.1.4 The use of HCl to wash/flush porous segments of lysimeters, that are to be used in sanitary landfills, may cause water quality interpretation problems. Sanitary landfills are notorious generators of methane gas. Reaction of methane with free chloride ion may result in the generation of di- and trichloromethane (also known as methylene chloride and chloroform). Because of the small liquid volumes in lysimeters and the sensitivity of EPA methods (including 601), false positives for one or both of these constituents may occur.

7.4.1.5 Stevenson (35) recommended treating cellulose-acetate hollow-fibers with silver nitrate and sodium chloride to prevent biofilm growths. Morrison (1) suggested rinsing membrane filters with distilled water.

7.4.1.6 The porous section and fittings of individual samplers may have defects that could cause air entry during sampling. Therefore, prior to taking samplers to the field, each unit should be checked for its bubbling pressure, pressure tested and vacuum tested for leaks. Procedures for these tests are given in U.S. EPA (12) and Timco (25[4]). Washers or "O" rings are used to seal the plugs at the tops of body tubes. However, the accesses for pressure-vacuum and discharge lines passing through these plugs are not sealed. These accesses may leak, and should also be sealed. In the past, lubricants have been used when cutting threads into body tubes, porous segments and fittings. In addition, lubricants have been used in various pressure-vacuum pumps. The user should contact the manufacturer to determine if these lubricants are still used. If present, these lubricants should be removed.

7.4.1.7 After cleaning and testing, samplers should be bagged to prevent contamination during transport to the field. Compatibility of bag material and analytical parameters should be considered. Upon arrival at the installation location, and immediately prior to installation, the porous section should be placed in distilled water for about 30 min to saturate the porous section (1). Timco (25[4]) indicated that applying a suction of about 50 cbar to a submerged PTFE sampler for about an hour would saturate the sampler porous section. Finally, immediately prior to installation, the sampler and associated lines should be assembled and checked for defects (for example, crimped lines).

7.4.2 *Suction Lysimeter and Filter Tip Sampler Installation:*

7.4.2.1 Suction lysimeter installation procedures have been described by U.S. EPA (12), Soilmoisture (18[4]), Timco (25[4]), Linden (54), and Rhoades and Oster (55). Filter tip sampler installation procedures were described by Torstensson and Petsonk (32).

7.4.2.2 The goals of installation are to make sure that hydraulic contact between the porous segment and the surrounding soil, and to minimize leakage of liquid along the outside of the sampler. U.S. EPA (12) recommended a silica flour/bentonite clay method to achieve these goals for suction lysimeters. A silica flour layer (installed as a slurry, see 7.4.2.6) placed around the porous segment increases hydraulic contact with the surrounding soil. Screened native backfill is placed above the silica flour, and a bentonite plug above the body tube prevents liquid leakage down the installation hole and along the body tube (see Fig. 15 and Fig. 16). Klute (56) indicated that a screened native soil slurry could be used in place of silica flour for shallow installations.

7.4.2.3 Samplers may be installed in the sidewall of an excavation or, for deeper applications, in a borehole preferably advanced with a hollow stem auger (12). U.S. EPA (12) suggested that suction lysimeters should be installed at an angle of 30 to 45° from vertical whenever practicable. This makes sure that an intact column of soil is retained above the porous cup. Accordingly, pore liquid samples will reflect flow through pore sequences that have not been disturbed by

AVA Documents
Document Sharing Hub

Full document details: ASTM D4696-18