This international standard was developed in accordance with internationally recognized principles on standardization established in the Decision on Principles for the Development of International Standards, Guides and Recommendations issued by the World Trade Organization Technical Barriers to Trade (TBT) Committee.

Designation: D5236 – 23

Standard Test Method for Distillation of Heavy Hydrocarbon Mixtures (Vacuum Potstill Method)[1]

This standard is issued under the fixed designation D5236; the number immediately following the designation indicates the year of original adoption or, in the case of revision, the year of last revision. A number in parentheses indicates the year of last reapproval. A superscript epsilon (ε) indicates an editorial change since the last revision or reapproval.

1. Scope*

1.1 This test method covers the procedure for distillation of heavy hydrocarbon mixtures having initial boiling points greater than 150 °C (300 °F), such as heavy crude oils, petroleum distillates, residues, and synthetic mixtures. It employs a potstill with a low pressure drop entrainment separator operated under total takeoff conditions. Distillation conditions and equipment performance criteria are specified and typical apparatus is illustrated.

1.2 This test method details the procedures for the production of distillate fractions of standardized quality in the gas oil and lubricating oil range as well as the production of standard residue. In addition, it provides for the determination of standard distillation curves to the highest atmospheric equivalent temperature possible by conventional distillation.

1.3 The maximum achievable atmospheric equivalent temperature (AET) is dependent upon the heat tolerance of the charge. For most samples, a temperature up to 565 °C (1050 °F) can be attained. This maximum will be significantly lower for heat sensitive samples (for example, heavy residues) and might be somewhat higher for nonheat sensitive samples.

1.4 The recommended distillation method for crude oils up to cutpoint 400 °C (752 °F) AET is Test Method D2892. This test method can be used for heavy crude oils with initial boiling points greater than 150 °C (302 °F). However, distillation curves and fraction qualities obtained by these methods are not comparable.

1.5 This test method contains the following annexes:

1.5.1 *Annex A1*—Test Method for Determination of Temperature Response Time,

1.5.2 *Annex A2*—Practice for Calibration of Sensors,

1.5.3 *Annex A3*—Test Method for Dehydration of a Wet Sample of Oil,

1.5.4 *Annex A4*—Practice for Conversion of Observed Vapor Temperature to Atmospheric Equivalent Temperature (AET), and

1.5.5 *Annex A5*—Test Method for Determination of Wettage.

1.6 The values stated in SI units are to be regarded as standard. The values given in parentheses after SI units are provided for information only and are not considered standard.

1.7 *This standard does not purport to address all of the safety concerns, if any, associated with its use. It is the responsibility of the user of this standard to establish appropriate safety, health, and environmental practices and determine the applicability of regulatory limitations prior to use.* For specific warnings, see 6.5.4.2, 6.5.6.3, 6.9.3, 9.5, 9.7, and A2.3.1.3.

1.8 **WARNING**—Mercury has been designated by many regulatory agencies as a hazardous substance that can cause serious medical issues. Mercury, or its vapor, has been demonstrated to be hazardous to health and corrosive to materials. Use Caution when handling mercury and mercury-containing products. See the applicable product Safety Data Sheet (SDS) for additional information. The potential exists that selling mercury or mercury-containing products, or both, is prohibited by local or national law. Users must determine legality of sales in their location.

1.9 *This international standard was developed in accordance with internationally recognized principles on standardization established in the Decision on Principles for the Development of International Standards, Guides and Recommendations issued by the World Trade Organization Technical Barriers to Trade (TBT) Committee.*

2. Referenced Documents

2.1 *ASTM Standards:*[2]

[1] This test method is under the jurisdiction of ASTM Committee D02 on Petroleum Products, Liquid Fuels, and Lubricants and is the direct responsibility of Subcommittee D02.08 on Volatility.

Current edition approved Nov. 1, 2023. Published November 2023. Originally approved in 1992. Last previous edition approved in 2018 as D5236 – 18a. DOI: 10.1520/D5236-23.

[2] For referenced ASTM standards, visit the ASTM website, www.astm.org, or contact ASTM Customer Service at service@astm.org. For *Annual Book of ASTM Standards* volume information, refer to the standard's Document Summary page on the ASTM website.

*A Summary of Changes section appears at the end of this standard

Copyright © ASTM International, 100 Barr Harbor Drive, PO Box C700, West Conshohocken, PA 19428-2959. United States

Documents
Document Sharing Hub
Full document details: ASTM D5236-23

D941 Test Method for Density and Relative Density (Specific Gravity) of Liquids by Lipkin Bicapillary Pycnometer (Withdrawn 1993)[3]
D1217 Test Method for Density and Relative Density (Specific Gravity) of Liquids by Bingham Pycnometer
D1250 Guide for the Use of the Joint API and ASTM Adjunct for Temperature and Pressure Volume Correction Factors for Generalized Crude Oils, Refined Products, and Lubricating Oils: API MPMS Chapter 11.1
D1298 Test Method for Density, Relative Density, or API Gravity of Crude Petroleum and Liquid Petroleum Products by Hydrometer Method
D1480 Test Method for Density and Relative Density (Specific Gravity) of Viscous Materials by Bingham Pycnometer
D2892 Test Method for Distillation of Crude Petroleum (15-Theoretical Plate Column)
D4057 Practice for Manual Sampling of Petroleum and Petroleum Products
D4177 Practice for Automatic Sampling of Petroleum and Petroleum Products
D5002 Test Method for Density, Relative Density, and API Gravity of Crude Oils by Digital Density Analyzer

3. Terminology

3.1 *Definitions of Terms Specific to This Standard:*

3.1.1 *atmospheric equivalent temperature (AET), n*—the temperature converted from the measured vapor temperature using equations in Annex A4.

3.1.1.1 *Discussion*—The AET is the expected vapor temperature if the distillation was performed at atmospheric pressure and there was no thermal decomposition.

3.1.2 *boil-up rate, n*—the quantity of vapor entering the distillation head per unit time.

3.1.2.1 *Discussion*—It is approximately equal to the takeoff rate, differing only by the parasitic heat losses. It is expressed in millilitres per hour for a head of any given internal diameter or millilitres per hour per square centimetre of cross-sectional area of the throat for comparative purposes.

3.1.3 *condenser, n*—the apparatus connected to the outlet of the distillation head in which condensation of the product occurs.

3.1.4 *distillation flask, n*—the flask, of glass or metal, in which the charge is boiled.

3.1.4.1 *Discussion*—The flask is sometimes called a kettle or pot.

3.1.5 *distillation head, n*—the section immediately above the distillation flask containing the entrainment separator.

3.1.6 *distillation pressure (or operating pressure), n*—the pressure measured in the distillation head just before the outlet to the recovery system.

3.1.7 *distillation temperature (or vapor temperature), n*—the temperature of the vapors in the distillation head at the point of measurement.

3.1.8 *loading, n*—the volume of charge relative to the cross-sectional area of the neck.

3.1.9 *pressure drop, n*—the difference between the operating pressure and the pressure measured in the distillation flask.

3.1.9.1 *Discussion*—It is a result of the friction developed by driving the vapors through the system expressed in kilopascals (mm Hg).

3.1.10 *spillover point, n*—the lowest point in the head above the entrainment separator over which the vapors can flow to the condensing region.

3.1.11 *static hold-up (or wettage), n*—the amount of liquid material remaining on the inside of the walls of the apparatus after the distillation has been completed.

3.1.11.1 *Discussion*—In this test method, it includes wettage of the distillation flask in the case of the steel flasks, but not in the case of glass flasks that are removed for weighing after the distillation is completed.

3.1.12 *takeoff rate, n*—the quantity of product removed per unit time.

3.1.12.1 *Discussion*—It is approximately equal to the boil-up rate differing only by parasitic heat losses.

4. Summary of Test Method

4.1 A weighed volume of sample is distilled at absolute pressures between 6.6 kPa and 0.013 kPa (50 mm Hg and 0.1 mm Hg) at specified distillation rates. Cuts are taken at preselected temperatures. Records of vapor temperature, operating pressure, and other variables are made at intervals, including at each cutpoint.

4.2 The mass of each fraction is obtained. Distillation yields by mass are calculated from the mass of each fraction relative to the total mass recovery.

4.3 The density of each fraction is obtained. Distillation yields by volume are calculated from the volume computed for each fraction at 15 °C (59 °F) relative to the total recovery.

4.4 Distillation curves of temperature versus mass or volume percent, or both, are drawn using the data from 4.2 and 4.3.

5. Significance and Use

5.1 This test method is one of a number of tests conducted on heavy hydrocarbon mixtures to characterize these materials for a refiner or a purchaser. It provides an estimate of the yields of fractions of various boiling ranges.

5.2 The fractions made by this test method can be used alone or in combination with other fractions to produce samples for analytical studies and quality evaluations.

5.3 Residues to be used in the manufacture of asphalt can also be made but may not always be suitable. The long heat soaking that occurs in this test method may alter some of the properties.

NOTE 1—While the practice of reblending distillates with residue can be done to produce a lighter residue, it is not recommended because it produces blends with irregular properties.

[3] The last approved version of this historical standard is referenced on www.astm.org.

AVA Documents
Document Sharing Hub

Full document details: ASTM D5236-23

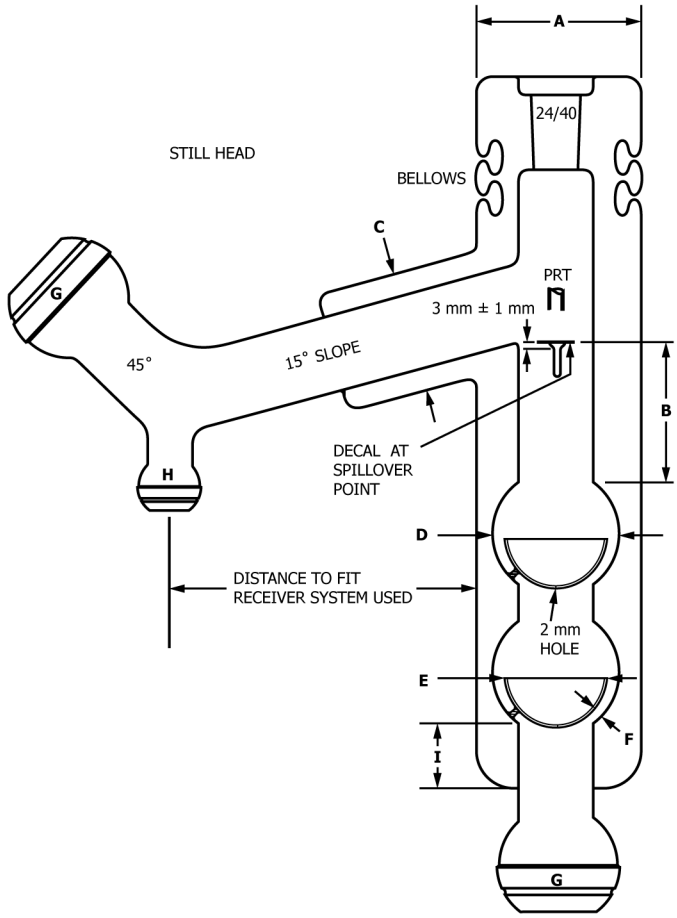

STILL HEAD DIMENSION CHART

Size	A	B	C	D	E	F	G	H	I
25 mm	85 mm	75 mm	64 mm	47 mm ID	40 mm OD	4–5 mm	35/25	28/15	35 mm
36 mm	90 mm	75 mm	64 mm	68 mm ID	57 mm OD	5–6 mm	65/40	35/25	35 mm
50 mm	110 mm	100 mm	75 mm	94 mm ID	79 mm OD	7–9 mm	75/50	35/25	45 mm
70 mm	140 mm	100 mm	100 mm	131 mm ID	111 mm OD	10–11 mm	102/75	50/30	70 mm

FIG. 1 Distillation Head

5.4 Details of cutpoints must be mutually agreed upon before the test begins.

5.5 This is a complex procedure involving many interacting variables. It is most important that at the time of first use of a new apparatus, its components be checked as detailed in Annex A1 and Annex A2 and that the location of the vapor temperature sensor be verified as detailed in 6.5.3 and Fig. 1.

6. Apparatus

6.1 Four sizes of apparatus, based upon the internal diameter of the distillation head (25 mm, 36 mm, 50 mm, and 70 mm), are allowed.[4] The apparatus (see Fig. 2) consists of a flask with heating mantles, an upper compensator, and a head containing an entrainment separator. Attached to the head are the vapor temperature sensor, a connection for the vacuum gauge, a condenser, a rundown line, a product receiver(s), and a vacuum pumping line with pump. The parts are connected by vacuum-tight joints to facilitate servicing.

6.2 *Distillation Flask:*

6.2.1 The sizes specified for flasks are at least 50 % larger than the size of the charge to provide space for suppression of foam and for bubble breaking. The size of the charge for each size of still is determined from the loading factor. The recommended loading factor is between 200 mL and 400 mL of charge per square centimetre of cross-sectional area in the neck of the head. Table 1 shows the range of charge volume that is recommended with each size of apparatus.

6.2.2 Flasks are made of borosilicate glass except those larger than 10 L, which are made of stainless steel for reasons of safety.

6.2.3 The flask is fitted with a thermowell reaching to within 6 mm of the bottom and offset from the center to avoid a stirring bar. In the case of glass flasks, the bottom shall be slightly flattened or slightly concave, but not perfectly flat to facilitate the rotation of the magnetic stirrer. Steel flasks can

[4] Cooke, *Industrial and Engineering Chemistry*, Vol 55, 1963, p. 36.

Documents
Document Sharing Hub

Full document details: ASTM D5236-23

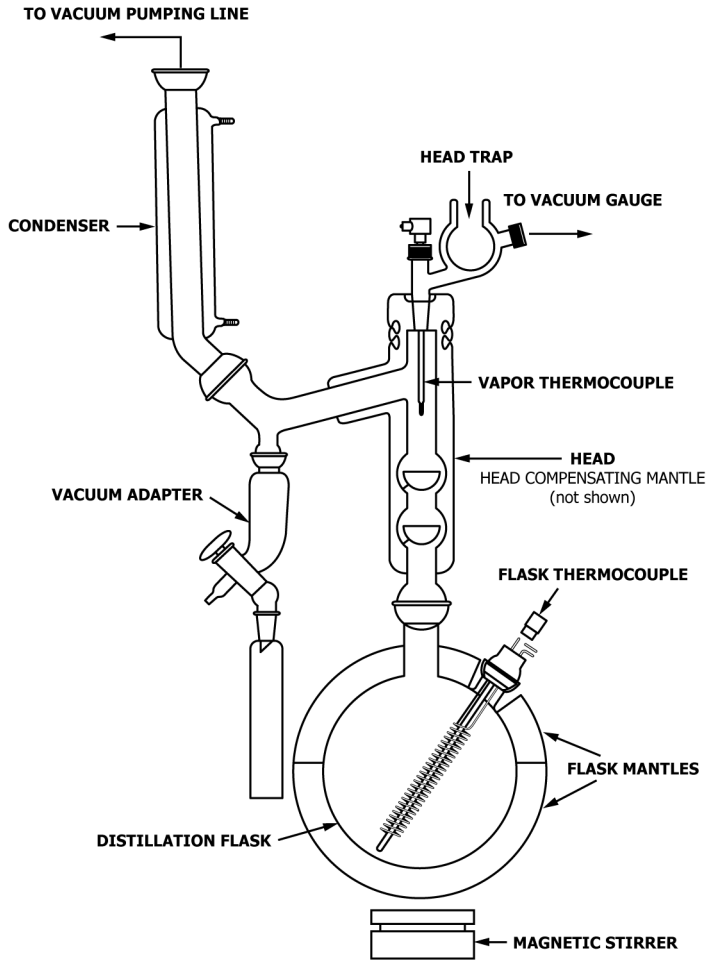

FIG. 2 Apparatus

TABLE 1 Standard Charge and Flask Size

Inside Diameter, mm	Throat Cross-Sectional Area, cm^2	Charge, L	Flask, L
25	5	1–2	2–3
36	10	2–4	3–6
50	20	4–8	6–12
70	40	8–16	12–24

have a cooling coil for rapid quenching of the distillation in an emergency. Fig. 3 shows a typical example.

6.3 *Stirring System*—A magnetically driven stirring bar approximately 3 mm diameter and 20 mm long shall be provided for the glass flasks, or 6 mm diameter by 50 mm long for the steel flasks. The edges shall be rounded to minimize grinding the wall of the flask. The external magnetic drive must be capable of rotating the bar in the flask when located directly below and touching the mantle. The drive can be used to support the apparatus above. An adjustable jacking mechanism is recommended for raising and lowering the stirrer.

6.4 *Heating System:*

6.4.1 The flask shall be heated by means of a nickel-reinforced quartz fabric heating mantle on the lower half so that boiling rates of up to 150 mL/h per cm^2 of the cross-sectional area of the neck can be maintained. A heat density of 0.5 W/cm^2 is adequate. Usually two or more circuits are used to improve heat control by applying automatic heat to the bottom circuit.

6.4.2 A temperature sensor shall be located between the wall of the flask and the mantle for control of the skin temperature.

6.4.3 The upper half of the flask shall be covered with a mantle to compensate for heat losses. A heat density of 0.2 W/cm^2 is adequate.

6.5 *Distilling Head:*

6.5.1 The head shall conform to the details shown in Fig. 1. It shall be made of borosilicate glass and be totally enclosed in a silvered glass vacuum jacket having a permanent vacuum of less than 0.0001 kPa (0.00075 mm Hg).

6.5.2 The head shall be enclosed in a heat-insulating system such as a glass fabric mantle capable of maintaining the outer wall of the glass vacuum jacket at a temperature 5 °C below the internal vapor temperature in the head. For this purpose, the vacuum jacket shall have a temperature sensor fastened to the outer wall of the jacket at a point level with the vapor temperature sensor and opposite to the outlet arm of the head.

6.5.3 The head shall be fitted with an adapter to support the vapor temperature sensor so that it is held centered in the neck with the top of the sensing tip 3 mm to 5 mm above the

AVA Documents
Document Sharing Hub

Full document details: ASTM D5236-23

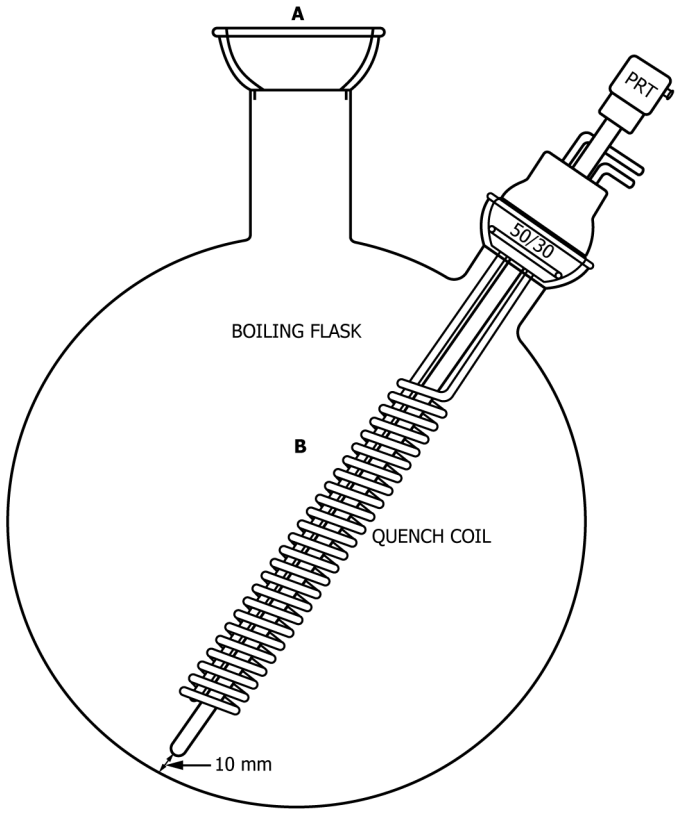

SYSTEM SIZE	A	B
25 mm	35/25	3 L
36 mm	65/40	6 L
50 mm	75/50	12 L
70 mm	102/75	24 L

FIG. 3 Distillation Flask

spillover point. This dimension can be checked by removing the temperature sensor and inserting in its place a copper wire having a short right angle bend at the bottom. By feeling for the spillover point, the distance from the top joint of the adaptor can be found. Laying the wire on the temperature sensor will then permit checking of this dimension.

6.5.4 The vapor temperature sensor shall be either a platinum resistance thermometer, a thermocouple with the junction head fused to the lower tip of the well, or any other device which meets the requirements in 6.5.4 and 6.5.4.1. It shall have a response time of less than 60 s as described in Annex A1.

6.5.4.1 The vapor temperature measuring device shall have an accuracy of 0.5 °C or better and be measured with a resolution of 0.1 °C or better.

6.5.4.2 The vapor temperature measuring device shall be calibrated over the full range of useful temperatures in combination with its associated instrument at the time of first use and at least once per year thereafter as described in A2.2.2. Alternatively, certified sensors may be used, provided the calibration of the sensor and its associated recording instrument can be traced back to a primary temperature standard. Recalibrate when either the sensor or the instrument is repaired or serviced. (**Warning—**Vapor temperature measurement is one of the two major sources of error in distillation data.)

6.5.4.3 Verification of the calibration of the vapor temperature measuring devices is to be made on a regular basis. Verification at least once a month is recommended. Verification of the calibration of the sensors can be accomplished potentiometrically by the use of standard precision resistance or by distilling a pure compound with accurately known boiling point, as described in A2.2.3.

6.5.5 A head trap as illustrated in Fig. 4 shall be fitted to the adapter described in 6.5.3 for connection to the vacuum sensor. It shall be kept filled with crushed dry ice at all times while in service.

6.5.6 A vacuum sensor shall be connected to the sidearm of the trap. The sensor shall be capable of reading the pressure with a precision equal to or better than 0.00133 kPa (0.01 mm Hg), whichever is greater. A non-tilting McLeod gauge or other primary reference device can achieve this accuracy when properly used, but a mercury manometer will permit this accuracy only down to a pressure of about 1 kPa and then only when read with a good cathetometer (an instrument based on a telescope mounted on a vernier scale to determine levels very accurately). Also, electronic sensors of the diaphragm type have been found satisfactory. Vacuum gauges based on hot wires, radiation, or conductivity detectors are not recommended.

AVA Documents
Document Sharing Hub

Full document details: ASTM D5236-23

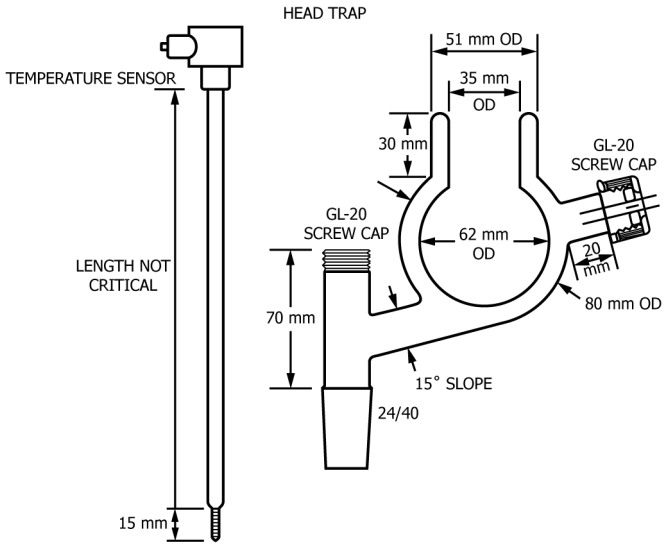

FIG. 4 Head Trap and Temperature Sensor

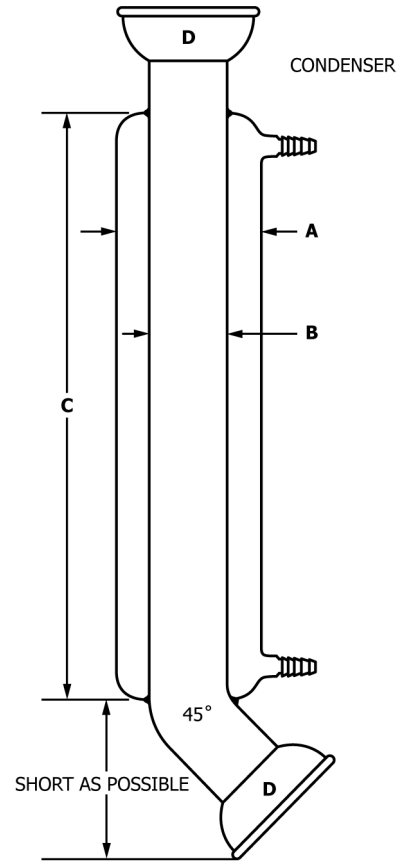

CONDENSER DIMENSION CHART

System Size	A	B	C	D
25 mm	51 mm	28 mm	300 mm	35/25
36 mm	75 mm	45 mm	300 mm	65/40
50 mm	80 mm	54 mm	400 mm	75/50
70 mm	120 mm	80 mm	400 mm	102/75

FIG. 5 Condenser

6.5.6.1 Primary standards, such as the non-tilting McLeod gauge, mercury manometer, or other analogous primary standard pressure devices, can be used without calibration when properly used and maintained. Alternatively, a tensimeter or certified electronic sensors may be used, provided the calibration of the sensor and its associated recording instrument can be traced back to a primary pressure standard.

6.5.6.2 Noncertified gauges shall be calibrated from a non-tilting McLeod gauge, another primary reference device, or a secondary electronic standard traceable to a primary standard. A basic calibration procedure is described in A2.3. Recalibrate when either the sensor or the instrument is repaired or serviced.

6.5.6.3 Verification of the calibration of pressure sensors is to be made on a regular basis. A frequency of at least once a week is recommended. Verification of the calibration of the sensors can be accomplished using the procedures described in A2.3 or against a certified reference system. (**Warning—** Measurement of vacuum (operating pressure) is one of the two major sources of error in the distillation procedure. It is therefore of prime importance that the instructions on calibration and verification be followed with great care and on a routine basis.)

6.6 *Condenser*—A condenser made of borosilicate glass shall be connected to the outlet arm of the head (see Fig. 5). It shall have sufficient capacity to condense essentially all vapors and capable of operating at coolant temperatures up to 70 °C to prevent wax buildup.

6.7 *Pumping Line:*

6.7.1 A pumping line shall be connected from the outlet of the condenser to the vacuum pump. The pumping line can be made of heavy-walled rubber or light metal tubing, but its inside diameter must be greater than half the inside diameter of the outlet of the condenser and less than 2 m long.

6.7.2 A surge tank of a size at least equal to the capacity of the flask shall be inserted in the pumping line adjacent to the pump.

6.7.3 An isolation valve of a diameter at least equal to the diameter of the pumping line shall be connected between the surge tank and the vacuum pump.

6.7.4 A dewar-type trap made of borosilicate glass, such as that illustrated in Fig. 4, shall be placed between the top of the distillation head and the vacuum sensor. It shall be kept filled with crushed dry ice at all times during the distillation to protect the vacuum system from contamination with residual vapors.

6.8 *Vacuum Source*—A single-stage mechanical vacuum pump capable of maintaining a steady pressure in the system at all operating pressures shall be connected to the pumping line. Automatic or manual control can be used.

6.9 *Recovery System:*

6.9.1 The recovery system is connected to the lower outlet of the product condenser and consists of a vacuum adapter to permit removal of distillate receivers without disturbing the pressure in the system. A suitable manual device is illustrated in Fig. 6.

6.9.2 Alternatively, either automatic or manual devices can be used to collect part or all of the fractions without the system

AVA Documents
Document Sharing Hub

Full document details: ASTM D5236-23