This international standard was developed in accordance with internationally recognized principles on standardization established in the Decision on Principles for the Development of International Standards, Guides and Recommendations issued by the World Trade Organization Technical Barriers to Trade (TBT) Committee.

Designation: D5284 – 09 (Reapproved 2023)

Standard Test Method for Sequential Batch Extraction of Waste with Acidic Extraction Fluid[1]

This standard is issued under the fixed designation D5284; the number immediately following the designation indicates the year of original adoption or, in the case of revision, the year of last revision. A number in parentheses indicates the year of last reapproval. A superscript epsilon (ε) indicates an editorial change since the last revision or reapproval.

1. Scope

1.1 This test method provides a procedure for the sequential leaching of a waste containing at least 5 % dry solids in order to generate solutions to be used to determine the constituents leached under the specified testing conditions.

1.2 This test method calls for the shaking of a known weight of waste with acidic extraction fluid of a specified composition as well as the separation of the liquid phase for analysis. The pH of the extraction fluid is to reflect the pH of acidic precipitation in the geographic region in which the waste being tested is to be disposed. The procedure is conducted ten times in sequence on the same sample of waste, and it generates ten solutions.

1.3 This test method is intended to describe the procedure for performing sequential batch extractions only. It does not describe all types of sampling and analytical requirements that may be associated with its application.

1.4 The values stated in SI units are to be regarded as standard. No other units of measurement are included in this standard.

1.5 *This standard does not purport to address all of the safety concerns, if any, associated with its use. It is the responsibility of the user of this standard to establish appropriate safety, health, and environmental practices and determine the applicability of regulatory limitations prior to use.*

1.6 *This international standard was developed in accordance with internationally recognized principles on standardization established in the Decision on Principles for the Development of International Standards, Guides and Recommendations issued by the World Trade Organization Technical Barriers to Trade (TBT) Committee.*

2. Referenced Documents

2.1 *ASTM Standards:*[2]

D75/D75M Practice for Sampling Aggregates
D420 Guide for Site Characterization for Engineering Design and Construction Purposes
D653 Terminology Relating to Soil, Rock, and Contained Fluids
D1129 Terminology Relating to Water
D1193 Specification for Reagent Water
D2234/D2234M Practice for Collection of a Gross Sample of Coal
D2777 Practice for Determination of Precision and Bias of Applicable Test Methods of Committee D19 on Water
D3370 Practices for Sampling Water from Flowing Process Streams
D4793 Test Method for Sequential Batch Extraction of Waste with Water

3. Terminology

3.1 *Definitions*—For definitions of terms used in this test method, see Terminology D1129.

3.2 *Symbols*—Variables listed in this test method are defined in the individual sections in which they are discussed. A list of the defined variables is also provided in Section 11.

4. Significance and Use

4.1 This test method is intended as a means for obtaining sequential extracts of a waste. The extracts may be used to estimate the release of certain constituents of the waste under the laboratory conditions described in this test method.

4.2 The pH of the extraction fluid used in this test method is to reflect the pH of acidic precipitation in the geographic region in which the waste being tested is to be disposed.

NOTE 1—Possible sources of information concerning the pH of precipitation in the geographic region of interest include state and federal

[1] This test method is under the jurisdiction of ASTM Committee D34 on Waste Management and is the direct responsibility of Subcommittee D34.01.04 on Waste Leaching Techniques.

Current edition approved Nov. 1, 2023. Published November 2023. Originally approved in 1992. Last previous edition approved in 2017 as D5284 – 09 (2017). DOI: 10.1520/D5284-09R23.

[2] For referenced ASTM standards, visit the ASTM website, www.astm.org, or contact ASTM Customer Service at service@astm.org. For *Annual Book of ASTM Standards* volume information, refer to the standard's Document Summary page on the ASTM website.

Copyright © ASTM International, 100 Barr Harbor Drive, PO Box C700, West Conshohocken, PA 19428-2959. United States

Documents
Document Sharing Hub
Full document details: ASTM D5284-09(2023)

environmental agencies, state universities, libraries, etc.

NOTE 2—For sequential batch extraction of waste using a nonacidic extraction fluid, see Test Method D4793.

4.3 An intent of this test method is for the final pH of each of the extracts to reflect the interaction of the extractant with the buffering capacity of the waste.

4.4 This test method is not intended to provide extracts that are representative of the actual leachate produced from a waste in the field or to produce extracts to be used as the sole basis of engineering design.

4.5 This test method has not been demonstrated to simulate actual disposal site leaching conditions.

4.6 This test method produces extracts that are amenable to the determination of both major and minor (trace) constituents. When minor constituents are being determined, it is especially important that precautions be taken in sample storage and handling to avoid possible contamination of the samples.

4.7 This test method has been tested to determine its applicability to certain inorganic components in the waste. This test method has not been tested for applicability to organic substances, volatile matter (see Note 5), or biologically active samples.

4.8 The agitation technique, rate, liquid-to-solid ratio, and filtration conditions specified in the procedure may not be suitable for extracting all types of wastes (see Sections 7 and 8 and Appendix X1).

5. Apparatus

5.1 *Straightedge,* such as a thin-edged yardstick.

5.2 *Impermeable Sheet,* of glazed paper, oil cloth, or other flexible material of a composition suitable to the analytes of interest.

5.3 *Drying Pans or Dishes* (for example, aluminum tins, porcelain dishes, glass weighing pans), two per waste, suitable to the waste being tested and the instructions given in 9.2.

5.4 *Drying Oven*—Any thermostatically controlled drying oven capable of maintaining a steady temperature of ±2 °C in a range of 100 to 110 °C.

5.5 *Desiccator,* having a capacity to hold the drying pans described in 5.3 and the crucibles described in 5.16.

5.6 *Laboratory Balance,* capable of weighing to 0.1 g.

5.7 *Erlenmeyer Flask,* 2 L capacity, equipped with a magnetic stir bar.

5.8 *Magnetic Stir Plate.*

5.9 *Graduated Cylinder,* 1 or 2 L capacity.

5.10 *Pipet,* 1 mL capacity.

5.11 *Volumetric Flask,* 1 L capacity.

5.12 *Pipet,* 10 mL capacity. (Various other sized pipets, including micropipets, may be necessary for 9.3.2.)

5.13 *pH Meter*—Any pH meter with a readability of 0.01 units and an accuracy of ±0.05 units at 25 °C.

5.14 *Carboy-Type Container,* with spigot, 20 to 50 L capacity, of a composition suitable to the nature of the analyses to be performed (see Practices D3370).

5.15 *Large Glass Funnel.*

5.16 *Crucibles,* porcelain, 20 mL capacity each, two per waste.

5.17 *Analytical Balance,* capable of weighing to 0.1 mg.

5.18 *Wash Bottle,* 500 mL capacity.

5.19 *Agitation Equipment,* of any type that rotates the extraction vessel in an end-over-end fashion at a rate of 0.5 ± 0.03 Hz such that the axis of rotation is horizontal and it passes through the center of the bottle (see Fig. 1 and Appendix X1).

NOTE 3—Similar devices having a different axial arrangement may be used if equivalency can be demonstrated.

5.20 *Pressure Filtration Assembly*—A pressure filtration device of a composition suitable to the nature of the analyses to be performed and equipped with a 0.45 or 0.8 µm pore size filter (see Note 8).

5.21 *Extraction Vessels,* cylindrical, wide mouth, of a composition suitable to the nature of the waste and analyses to be performed, constructed of materials that will not allow sorption of the constituents of interest, and sturdy enough to withstand the impact of the falling sample fragments. The size of the container should be selected so that the sample plus extraction fluid occupy approximately 95 % of the container. The containers must have watertight closures. Containers for samples in which gases may be released should be provided with venting mechanisms.

NOTE 4—Suitable container sizes range from 10 to 11 cm in diameter and 22 to 33 cm in height.

NOTE 5—Venting the container has the potential to affect the concentration of volatile compounds in the extracts.

5.21.1 Extraction vessels should be cleaned in a manner consistent with the analyses to be performed (see Section 13 of Practices D3370).

6. Reagents

6.1 *Purity of Reagents*—Reagent grade chemicals shall be used in all tests. Unless otherwise indicated, it is intended that all reagents shall conform to the specifications of the Committee on Analytical Reagents of the American Chemical Society, where such specifications are available.[3] Other grades may be used, provided it is first ascertained that the reagent is of sufficiently high purity to permit its use without lessening the accuracy of the determination.

6.2 *Purity of Water*—Unless otherwise indicated, references to water shall be understood to mean Type IV reagent water at 18 to 27 °C conforming to Specification D1193. The method

[3] Reagent Chemicals, American Chemical Society Specifications, American Chemical Society, Washington, DC. For suggestions on the testing of reagents not listed by the American Chemical Society, see *Analar Standards for Laboratory Chemicals*, BDH Ltd., Poole, Dorset, U.K., and the *United States Pharmacopeia and National Formulary*, U.S. Pharmacopeial Convention, Inc. (USPC), Rockville, MD.

AVA Documents
Document Sharing Hub

Full document details: ASTM D5284-09(2023)

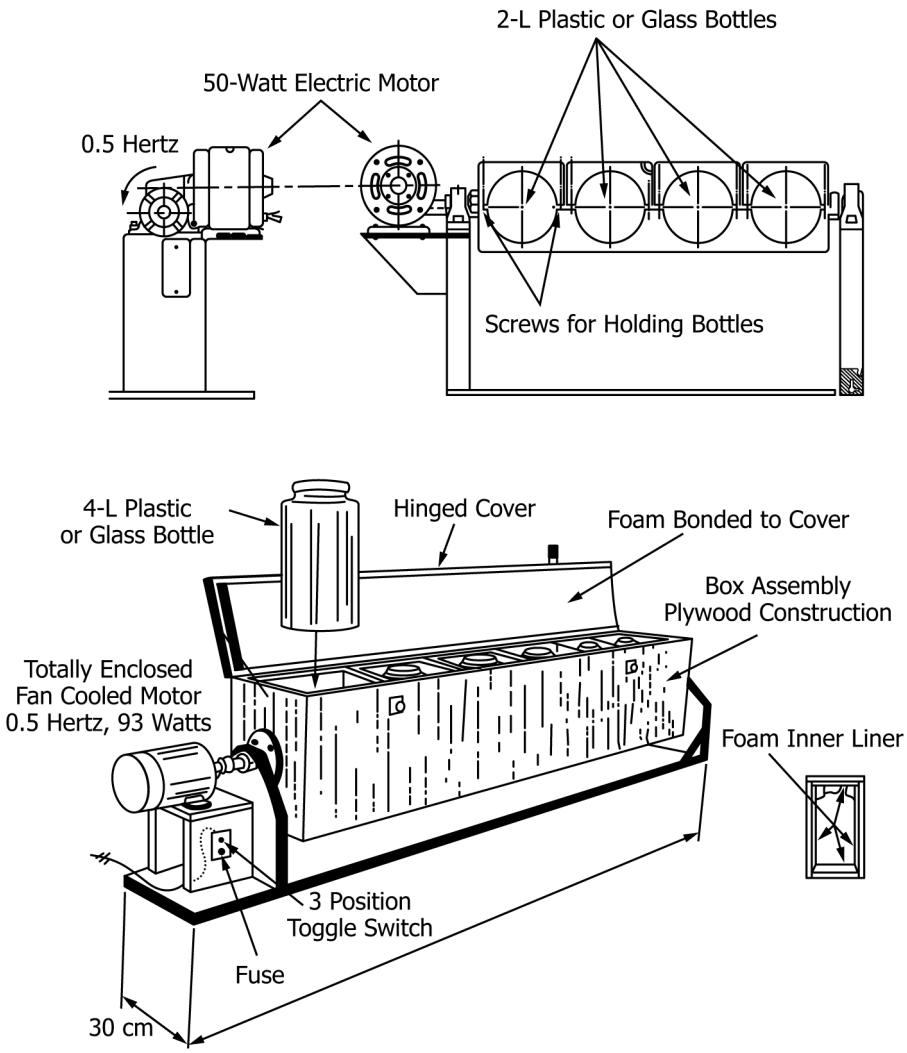

FIG. 1 Extractors

by which the water is prepared, that is, distillation, ion exchange, reverse osmosis, electrodialysis, or a combination thereof, should remain constant throughout testing.

6.3 *Sulfuric Acid/Nitric Acid Solution*—A 60/40 weight percent (wt %) mixture prepared using 95 to 98 wt % sulfuric acid and 69 to 71 wt % nitric acid. (See 9.3 for instructions on the preparation of this solution.)

7. Sampling

7.1 Obtain a representative sample of the waste to be tested by using, where available, ASTM sampling methods developed for the specific industry (see Practice D75/D75M, Guide D420, Terminology D653, and Practice D2234/D2234M).

7.2 Sampling methodology for materials of similar physical form shall be used where no specific methods are available.

7.3 The amount of sample to be sent to the laboratory should be sufficient to perform the solids content determination as specified in 9.2, and to provide 100 g of sample on a dry weight basis for each extraction.

7.4 It is important that the sample of the waste be representative with respect to surface area, as variations in surface area would directly affect the leaching characteristics of the sample. Waste samples should contain a representative distribution of particle sizes.

NOTE 6—Information on obtaining representative samples can also be found in *Pierre Gy's Sampling Theory and Sampling Practice*.[4]

7.5 In order to prevent sample contamination or constituent loss prior to extraction, keep the samples in closed containers appropriate to sample type and desired analysis. See Practices D3370 for guidance. Record the storage conditions and handling procedures in the report.

7.6 The time between collection and extraction of the sample should be determined by the nature of the sample and the information desired. See Practices D3370 for guidance. Report the length of time between sample collection and extraction.

[4] Pitard, F., *Pierre Gy's Sampling Theory and Sampling Practice*, Vols I and II, CRC Press, 1989.

AVA Documents
Document Sharing Hub

Full document details: ASTM D5284-09(2023)

8. Sample Preparation

8.1 For free-flowing particulate solid wastes, obtain a sample of the approximate size required in the test by quartering the sample (Section 7) received for testing on an impermeable sheet of glazed paper, oil cloth, or other flexible material having a composition suitable to the analytes of interest, as follows:

8.1.1 Empty the sample container into the center of the sheet.

8.1.2 Gently flatten the sample out with a suitable straightedge until it is spread uniformly to a depth at least twice the maximum particle diameter.

8.1.3 Remix the sample by lifting a corner of the sheet and drawing it low across to the opposite corner in such a manner that the material is made to roll over and over and does not merely slide along. Continue the operation with each corner, proceeding in a clockwise direction. Repeat this operation ten times.

8.1.4 Lift all four corners of the sheet toward the center and, holding all four corners together, raise the entire sheet into the air to form a pocket for the sample.

8.1.5 Repeat the procedure described in 8.1.2 to flatten the sample out.

8.1.6 With a straightedge (such as a thin-edged yardstick) at least as long as the flattened mound of sample, gently divide the sample into quarters. Make an effort to avoid using pressure on the straightedge sufficient to cause damage to the particles.

8.1.7 Discard the alternate quarters.

8.1.8 If further reduction of the sample size is necessary, repeat the steps given in 8.1.3 – 8.1.7. Use a sample size to provide 100 g of solid on a dry weight basis for each extraction. Provide additional samples for the determination of solids content (see 9.2). Use of a sample size other than 100 g of solid on a dry weight basis for extraction is not recommended; however, if a different sample size is used, report this fact.

NOTE 7—For other acceptable methods of mixing and subsampling free-flowing solid particulate wastes, see *Pierre Gy's Sampling Theory and Sampling Practice*.[4] The method of subsampling should be determined by the physical properties of the waste, analytes of interest, and equipment available.

8.2 For field-cored solid wastes or castings produced in the laboratory, cut a representative section weighing approximately 100 g for testing, plus samples for the determination of solids content. Shape the sample so that the leaching solution will cover the material to be leached.

8.3 For multiphasic wastes, mix thoroughly to ensure that a representative sample will be withdrawn. Take samples for the determination of solids content at the same time that test samples are taken.

9. Procedure

9.1 Record a physical description of the sample to be tested, including particle size so far as it is known.

9.2 *Solids Content*—Determine the solids content of two separate portions of the sample as follows:

9.2.1 Dry to a constant weight, at 104 ± 2 °C, two dishes or pans of size suitable to the solid waste being tested. Cool in a desiccator and weigh. Record the values to ±0.1 g.

9.2.2 Place 50 g of the waste to be tested into each pan. Record the mass of sample in each pan to ±0.1 g.

9.2.3 Dry 16 to 20 h at 104 ± 2 °C. Record the temperature and time of the drying period.

9.2.4 Cool to room temperature in a desiccator and reweigh. Record the mass to ±0.1 g.

9.2.5 Repeat the steps given in 9.2.3 and 9.2.4 until constant container-sample masses are obtained. Discard the dried samples following completion of this step.

9.2.6 Calculate the solids content of the sample from the data obtained in 9.2.1, 9.2.2, and 9.2.4 as follows:

$$S = A/B \tag{1}$$

where:

A = mass of sample after drying, g,
B = original mass of sample, g, and
S = solids content, g/g.

Average the two values obtained. Record the solids content.

9.3 *Preparation of Extraction Fluid*—Prepare a 60/40 wt % mixture of sulfuric acid/nitric acid. Cautiously mix 60 g of concentrated sulfuric acid with 40 g of concentrated nitric acid. The preparation of this mixture should be performed in a laboratory fume hood.

9.3.1 Using the 60/40 sulfuric acid/nitric acid mixture, prepare a second solution by diluting 1.0 mL of the 60/40 mixture to 1000 mL using water and a 1 L volumetric flask.

9.3.2 Using the 1/1000 solution prepared in 9.3.1, prepare the extraction fluid having the desired pH ± 0.05 (see 4.2) by pipeting a volume of the 1/1000 solution into 2000 mL of water with mixing until the desired pH ± 0.05 is achieved. A recommended method for preparing the extraction fluid is to add 2000 mL of water to a 2 L Erlenmeyer flask equipped with a magnetic stir bar. Place the Erlenmeyer flask on a magnetic stir plate and add the 1/1000 solution to the flask with stirring. Shake the mixture vigorously and measure its pH once the solution is static. Continue this process until the desired solution pH ± 0.05 is reached. Record the amount of 1/1000 solution added to 2000 mL of water to achieve the desired pH ± 0.05. Record the pH value of the solution. Additional 2 L batches of the extraction fluid can be prepared by mixing the determined volume of 1/1000 solution with 2000 mL of water. The pH of the extraction fluid must be within ±0.05 of the desired value for use in the extraction procedure. For extracting different wastes requiring the same extraction fluid pH or performing replicate extractions, multiple batches of extraction fluid can be prepared and measured for correct pH, and if the pH is within ±0.05 of the desired value, the batches can be combined in a carboy-type container of a composition suitable to the nature of the analyses to be performed. The pH of the resulting solution in the carboy must be measured once again to verify the correct pH before using the solution in the extraction procedure and as a rinse solution (see the procedures given in 9.4 and 9.7). If the pH value is not within the tole

AVA Documents
Document Sharing Hub

Full document details: ASTM D5284-09(2023)

specification, the solution shall not be used, and fresh extraction fluid shall be prepared. Record the pH value of each batch, and of the solution in the carboy, prior to its use.

9.4 *Extraction Procedure*—If the entire procedure cannot be conducted without interruption, at least the first four extraction sequences must be conducted without interruption.

9.4.1 Determine the mass of the extraction vessel to be used in the extraction procedure to the nearest 0.1 g. Record the mass of the extraction vessel, M_{v1}. Use one extraction vessel per waste throughout the sequence of extractions.

9.4.2 Add 100 g (weighed to ±0.1 g) of solid waste on a dry weight basis to the extraction vessel. Calculate the amount of as-received waste to add using the following equation:

$$M = \frac{100}{S} \tag{2}$$

where:

S = solids content (g/g) determined in 9.2.6, and
M = mass of as-received waste (weighed to ±0.1 g) to add to the extraction vessel to yield 100 g of solid waste.

9.4.2.1 If a mass of solid waste on a dry weight basis other than 100 g is used, Eq 2-4 must be modified to reflect the use of a mass other than 100 g. Replace 100 in these equations with the mass used. The use of a mass other than 100 g is not recommended.

9.4.3 Add a mass in g, M_{ef}, of extraction fluid (see 9.3) to the extraction vessel determined using the following equations:

$$M_{sw} = M - 100 \tag{3}$$

where:

M_{sw} = mass of moisture (g) in the sample added to the extraction vessel, and

$$M_{ef} = (20)\,(100) - M_{sw} \tag{4}$$

This will provide a solid-to-liquid ratio of 1:20 in the extraction vessel.

9.4.4 Agitate continuously for 18 ± 0.25 h at 18 to 27 °C. Record the agitation time and temperature.

9.4.5 Open the extraction vessel. Observe and record any visible physical changes in the sample and leaching solution. Record the pH of the waste/leaching solution slurry.

9.5 *Filtration*—Transfer as much of the waste/leaching solution as possible through a large glass funnel to a pressure filtration device equipped with a 0.45 or 0.8 µm filter. Transfer the mixed slurry. Do not decant. Invert the extraction vessel over the filtration device and allow the liquid to drain for 1 min from the solid remaining in the extraction vessel. It is important to achieve as complete a transfer of fluid from the extraction vessel to the filtration device as possible. Pressure filter the liquid through the filter using nitrogen gas or an inert gas that will not contaminate or change the integrity of the sample. After the extract has passed through the filter, continue running gas through the filtration device at 30 psi for 3 min. The filtrate obtained is the extract mentioned in this test method (see 9.6 and 10.8). Determine the mass of the filtrate collected and report it as M_f for the extraction step. Measure the pH of the extract immediately, remove the amount of filtrate necessary for the determination of total dissolved solids content in 9.6, and then preserve the extract in a manner consistent with the chemical analyses or biological testing procedures to be performed (Practices D3370, Section 15).

NOTE 8—Analytical results may be affected by the type of filter used. If a 0.8 µm filter pore size is used, the resulting extract should be digested prior to elemental analysis. The composition of the filter should also be considered. If the filter is composed of material that may contaminate the extract during filtration, the filter should be washed in the filtration device in a manner consistent with the chemical analyses or biological testing procedures to be performed on the extract. For example, for elemental analysis of the extract, if a filter composed of borosilicate glass fiber is used, in order to prevent contamination, it should be washed in the filtration device with a dilute acid solution and rinsed with approximately 2 L of water prior to filtration.

NOTE 9—Prefilters can be used only if it is absolutely necessary (filtrate for analysis or testing cannot be obtained unless a prefilter is used) due to the loss of sample trapped in the pores of the prefilter and the possibility of the prefilter disintegrating during rinsing.

NOTE 10—It is recommended that all filtrations be performed in a hood.

9.6 *Total Dissolved Solids Content (TDS)*—Add a 10.0 g aliquot of the extract to each of two 110 ± 2 °C dried, preweighed crucibles. Place the samples in a drying oven at 110 ± 2 °C for 3 h. Record the drying oven temperature and drying time. Remove the crucibles and let them cool in a desiccator. Reweigh the crucibles and record their weights to ±0.1 mg.

NOTE 11—Only one drying is performed to limit the contact time between the solid and the rinse solution in the extraction vessel prior to the next extraction step (see 9.7, Section 10, and 10.7).

9.6.1 If the mass of solid lost through dissolution, M_d (see 10.2), in the first extract is less than 1 % of the mass of solid used in the first extraction step, and if the percent of solid lost through dissolution in the second extraction step is less than or equal to the percent of solid lost through dissolution in the first extraction step, the determination of TDS in the following extracts is not required, and the user can assume that TDS and M_d are equal to 0 for Eq 6 and 7 for Extracts 3 through 10.

9.7 Quantitatively transfer the damp solid from the filter back to the original extraction vessel, including the filter. Use extraction fluid prepared as described in 9.3 from a preweighed wash bottle to assist in this transfer and to rinse the filtration device. No more than 500 g of rinse solution should be used. Use the smallest amount of rinse solution possible to achieve a thorough transfer. Using tweezers or a similar device, recover the filter and rinse the adhering solid into the extraction vessel with rinse extraction fluid from the pre-weighed wash bottle. Do not leave the filter in the extraction vessel. Reweigh the wash bottle to determine the amount of rinse solution used in the transfer. Record this value as M_R. Weigh the extraction vessel following the transfer described above, and record this value as M_v. The extraction vessel may be sealed until a feasible time for the addition of new extraction fluid. This is to enable filtration during the next sequence at a reasonable time during the day. If the slurry is stored for longer than 6 h in the extraction vessel prior to the addition of new extraction fluid, the data generated by analysis of the extracts should be plotted to check for perturbation of the data curve.

AVA Documents
Document Sharing Hub

Full document details: ASTM D5284-09(2023)