NOTICE: This standard has either been superseded and replaced by a new version or withdrawn.
Contact ASTM International (www.astm.org) for the latest information.

Designation: D531 – 00 (Reapproved 2005)

Standard Test Method for Rubber Property—Pusey and Jones Indentation[1]

This standard is issued under the fixed designation D531; the number immediately following the designation indicates the year of original adoption or, in the case of revision, the year of last revision. A number in parentheses indicates the year of last reapproval. A superscript epsilon (ε) indicates an editorial change since the last revision or reapproval.

This standard has been approved for use by agencies of the Department of Defense.

1. Scope

1.1 This test method covers the determination of the indentation of rubber or rubber-like materials by means of the Pusey and Jones type of plastometer. This apparatus is used to measure the depth of indentation of an indentor, under fixed force into the surface of a specimen.

1.2 The values stated in SI units are to be regarded as the standard.

1.3 *This standard does not purport to address all of the safety concerns, if any, associated with its use. It is the responsibility of the user of this standard to establish appropriate safety and health practices and determine the applicability of regulatory limitations prior to use.*

2. Referenced Documents

2.1 *ASTM Standards:*[2]

D618 Practice for Conditioning Plastics for Testing

D1415 Test Method for Rubber Property—International Hardness

NOTE 1—The specific dated edition of the practice that prevails in this document is referenced in the Precision section.

D4483 Practice for Evaluating Precision for Test Method Standards in the Rubber and Carbon Black Manufacturing Industries

3. Significance and Use

3.1 The Pusey and Jones indentation value is the depth of indentation, expressed in hundredths of a millimetre, of a ball 3.175 mm (0.1250 in.) in diameter under an expressed force of 9.8 N (2.2 lbf). This value may be used to compare the indentation resistance of rubber and rubber-like materials.

3.2 The indentation value obtained should not be confused with hardness as measured by Test Method D1415, since in the latter test the rubber immediately adjacent to the indentor is precompressed.

4. Apparatus

4.1 *Plastometer*, an instrument consisting of an indentor, a mass for applying the stated force on the indentor, a micrometer for indicating the depth of the indentation, a specimen holder and support.

4.1.1 *Indentor*, for indenting the specimen, consisting of a vertical steel shaft attached, at the upper end to a depth indicator gage, and terminating in a steel sphere having a diameter of 3.175 ± 0.015 mm (0.1250 ± 0.0005 in.) of polished, noncorrosive hard metal treated to resist wear.

4.1.2 *Mass*, the mass shall be 1000 ± 0.01 g.

4.1.3 *Depth Indicator Gage*, a micrometer attached to the plastometer, either an electronic digital gage or analog dial gage, capable of displaying indentor movement (indentation) in increments of at least 0.01 mm (0.0004 in.) and having travel of 0 (zero) to no less than 3 mm (0.12 in).

4.1.4 *Support*, a support frame, or fixture, for the plastometer, shall be configured so that the specimen holder and hence, the specimen, are perpendicular to the indentor support shaft and that the mass may be independently raised or lowered vertically, permitting the indentor to rest on the surface of the specimen and the mass to be subsequently applied.

4.1.5 *Specimen Holder*, for the standard, or reference specimen described in 5.1, shall consist of a clamping fixture of two metal plates secured by two threaded bolts. The uppermost plate shall have a hole and a slot, as depicted in Fig. 1, to allow for the unencumbered introduction of the indentor to the specimen.

4.1.5.1 The purpose of the specimen holder is to support the specimen in a manner that reduces, or eliminates, relative positioning or movement that may adversely affect test determinations.

[1] This test method is under the jurisdiction of ASTM Commitee D11 on Rubber and is the direct responsibility of Subcommittee D11.10 on Physical Testing.

Current edition approved May 1, 2005. Published May 2005. Originally approved in 1939. Last previous edition approved in 2000 as D531 – 00. DOI: 10.1520/D0531-00R05.

[2] For referenced ASTM standards, visit the ASTM website, www.astm.org, or contact ASTM Customer Service at service@astm.org. For *Annual Book of ASTM Standards* volume information, refer to the standard's Document Summary page on the ASTM website.

Copyright © ASTM International, 100 Barr Harbor Drive, PO Box C700, West Conshohocken, PA 19428-2959, United States.

Documents
Document Sharing Hub
Full document details: ASTM D531-00(2005)

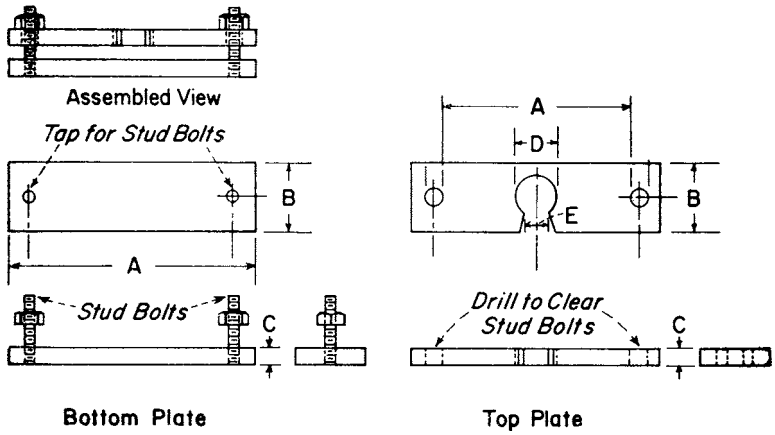

mm		in.
A, min	80	3.15
B, min	30	1.2
D	17 to 18	0.67 to 0.70
E	11 to 12	0.43 to 0.47
F	60	2.36

FIG. 1 Holder for Test Specimens

4.1.5.2 In routine testing, a specimen holder, a support, or both, of other, but similar, configurations may be employed to accommodate specimens other than those described in 5.1, refer to 5.1.1.

5. Test Specimens

5.1 The standard, or reference, test specimen shall be a uniform molded rectangular block a minimum of 13 mm (0.51 in.) in thickness, 30 mm (1.18 in.) in width, and 75 mm (2.95 in.) in length. The upper and lower surfaces, those opposite surfaces with the largest area, shall be parallel to within ±0.5 mm (±0.20 in).

5.1.1 The standard, or reference, test specimen shall be used when the plastometer is employed for the purpose of determining a standard, or reference, either within or between laboratories, that is, in other than routine testing.

5.2 In routine testing, specimens may be used with a configuration other than those of the standard, or reference, test specimen described in 5.1.

6. Procedure

6.1 *Measurement of Indentation of Standard, or Reference Specimens*:

6.1.1 When measuring the indentation on a standard, or reference specimen as described in 5.1, secure it in the specimen holder (refer to Fig. 1 and Section 4.1.5) with the bolts tightened sufficiently to hold it firmly without measurable compression.

6.1.2 Place the specimen holder on the support.

6.1.3 Mount the plastometer over the specimen so that the indentor shaft is perpendicular to the support and hence the specimen holder, to within ±0.05 mm (±0.002 in).

6.1.4 The plastometer and support shall be placed upon a flat surface in a manner that prevents unsteadiness or movement other than described in 6.3.

6.1.5 Lower the indentor shaft until the indentor is at the moment of contact with the specimen.

6.1.5.1 Adjust the depth indicator gage to record indentations up to 3 mm (0.12 in).

6.1.5.2 Adjust the depth indicator gage so the display indicates zero.

6.1.6 Lower the mass onto the indentor, in a fashion that eliminates shock, until the mass rests fully on the indentor.

6.1.7 The amount of indentation displayed on the depth indicator gage 60 s (±1 s) after the application of a total force of 9.8 N, shall be recorded.

6.1.8 Make no less than 3 such determinations on the specimen at least 13 mm (0.51 in) apart and from any edge.

6.1.9 The median of the determinations, expressed as a whole number indicating hundredths of millimetres, shall be reported as the Pusey and Jones Indentation Value, refer to 8.1.1.

6.2 *Measurement of Indentation of Specimens for Routine Tests (Nonstandard Specimens)*:

6.2.1 When making determinations on specimens other than those described in 5.1, specimen holders, supports or other suitable fixturing, similar to those previously described, may be employed and the procedure in 6.1 may be followed, otherwise:

6.2.2 Mount the plastometer over, or directly upon, the specimen, so that the indentor shaft is vertical and perpendicular to the specimen surface and both are level, as determined by means of a spirit level or similar device.

6.2.3 Position curved (convex or concave) or irregularly shaped specimens, so that the center line of the indentor shaft is perpendicular to the tangent of the specimen at the point of contact of the indentor and that determinations shall be made in accordance with 6.2.8.

6.2.4 The plastometer and specimen, or any fixtures employed, shall be secure and situated in a manner that prevents unsteadiness or movement other than described in 6.3.

6.2.5 Lower the indentor shaft until the indentor is at the moment of contact with the specimen.

AVA Documents
Document Sharing Hub

Full document details: ASTM D531-00(2005)