NOTICE: This standard has either been superseded and replaced by a new version or withdrawn.
Contact ASTM International (www.astm.org) for the latest information

Designation: D 5342 – 97 (Reapproved 2002)

An American National Standard

Standard Test Method for Resistance to Bending of Paper and Paperboard (Taber-Type Tester in Basic Configuration)[1]

This standard is issued under the fixed designation D 5342; the number immediately following the designation indicates the year of original adoption or, in the case of revision, the year of last revision. A number in parentheses indicates the year of last reapproval. A superscript epsilon (ϵ) indicates an editorial change since the last revision or reapproval.

1. Scope

1.1 This test method covers a procedure used to measure the resistance to bending of paper and paperboard.

1.2 The bending moment required to deflect the free end of a 38-mm (1.5-in.) wide vertically clamped specimen 15° from its center line when the load is applied 50 mm (1.97 in.) away from the clamp is determined. The resistance to bending is calculated from the bending moment.

1.3 Some instruments of the type described in this test method (see Section 6) may be equipped with ultrasensitive attachments or may be modified to accommodate shorter specimen lengths than that specified in this test method (see Section 9).

1.4 Test Method D 5650 describes a modification of the instrument described in this test method for measurements in the 0 to 10 Taber stiffness range only, and which requires a smaller test specimen. The modified procedure may be recommended for papers which are low in grammage or highly flexible, or both.

1.5 Test results obtained using modifications of the basic Taber-type instrument such as that described in Test Method D 5650 have been reported to be as much as 40 % different from those obtained using this test method, and such modifications must not be used when this test method is specified.

1.6 *This standard does not purport to address all of the safety concerns, if any, associated with its use. It is the responsibility of the user of this standard to establish appropriate safety and health practices and determine the applicability of regulatory limitations prior to use.*

2. Referenced Documents

2.1 *ASTM Standards:*

D 585 Practice for Sampling and Accepting a Single Lot of Paper, Paperboard, Fiberboard, or Related Products[2]

D 685 Practice for Conditioning Paper and Paper Products for Testing[2]

D 1968 Terminology Relating to Paper and Paper Products[2]

D 5650 Test Method for Resistance to Bending of Paper of Low Bending Stiffness (Taber-Type Tester in the 0 to 10 Taber Stiffness Unit Configuration)[2]

E 122 Practice for Calculating Sample Size to Estimate, with a Specified Tolerable Error, the Average for Characteristic of a Lot or Process[3]

3. Terminology

3.1 *Definitions*—Definitions shall be in accordance with Terminology D 1968 and the *Dictionary of Paper*.[4]

4. Summary of Test Method

4.1 A test specimen of defined dimensions is bent through a specified angle using a specific testing instrument. The resulting bending moment is read from the instrument scale.

4.2 The resistance to bending can be calculated from the bending moment.

5. Significance and Use

5.1 Bending resistance of paper relates to a number of end-use applications including wrapping, printing, copy machine performance, high-speed mechanical handling of documents, and other applications.

6. Apparatus

6.1 *Description*:

6.1.1 The basic instrument that has been used for the test described in this test method for nearly fifty years is a manually operated (crank-driven) instrument. Over the years, various improvements in the basic instrument have been made for improved ease of use or greater reproducibility of data, or both. These improvements include replacement of the manual (crank) drive system with a constant speed motor, addition of automatic data determination, and automated instrument (motor sequencing) operation. Fig. 1 shows the motor-driven version of the instrument (see 6.1.2). It is the motor-driven model of the basic instrument that is the basis for this test method. However, any of the instrument variations described

[1] This test method is under the jurisdiction of ASTM Committee D06 on Paper and Paper Products and is the direct responsibility of Subcommittee D06.92 on Test Methods.

Current edition approved Dec. 10, 1997. Published November 1998. Originally approved in 1993. Last previous edition approved in 1995 as D 5342 – 95.

[2] *Annual Book of ASTM Standards*, Vol 15.09.

[3] *Annual Book of ASTM Standards*, Vol 14.02.

[4] Available from the Technical Association of the Pulp and Paper Industry, P.O. Box 105113, Atlanta, GA 30348.

Copyright © ASTM International, 100 Barr Harbor Drive, PO Box C700, West Conshohocken, PA 19428-2959, United States.

Documents
Document Sharing Hub

Full document details: ASTM D5342-97(2002)

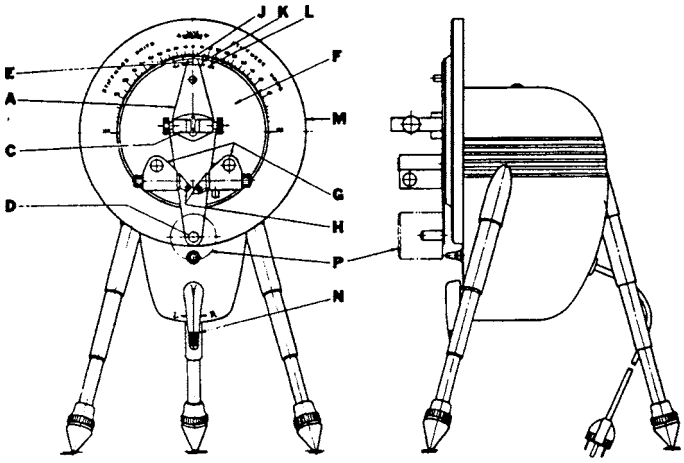

FIG. 1 Stiffness Instrument

in this section, when properly calibrated and operated, should yield the same result. The components of the basic instrument can be seen in Fig. 1 as follows:

6.1.1.1 A pendulum (A) supported in antifriction in bearings, carrying a vise (C) that has two clamping screws for holding and centering the test specimen, the lower edge of the vise coinciding with the center of the pendulum bearing. The pendulum is balanced, and at its lower end is a stud (D) to which weights may be attached and that loads the pendulum at a distance of 100 ± 0.025 mm (3.94 in.) from its center; without added weights the loading is 10 ± 0.001 g. A line (E) coinciding with the center line of the vise jaws and the weight stud (D), is engraved at the upper end of the pendulum.

6.1.1.2 A vertical disk (F), driven on the same axis as the pendulum by a driving mechanism, carried two driving arm attachments (G) so located as to provide the specimen with a cantilevered loading length of 50 ± 0.025 mm (1.97 in.) when it is deflected 15°. Fig. 1 does not show the crankdriving mechanism. The driving arms have rollers (H) that are adjustable to accommodate specimens of different thicknesses. On the periphery of the upper part of the disk is a marked line (J) coinciding with the center line between the driving rollers (H) and the axis, and two reference lines (K and L) are engraved on the periphery of the disk at angular distances of 7.5° and 15° on both sides of the center mark (J).

6.1.1.3 Located around the periphery of the disk (F) is a fixed annular disk (M) with a load scale from 0 to 100 on both sides of a zero point that is adjusted to coincide with the center line mark (J), the scale indicating the bending moment required to flex the specimen to the right or to the left, the divisions being in accordance with the sine of the angle through which the pendulum and weight are turned.

6.1.1.4 Various loading weights (P) for the pendulum, to give a maximum bending moment of 5000 g-cm (490 mN·m).

6.1.2 For operator convenience and improved testing reproducibility, the "driving mechanism" (crank) of the basic unit was replaced by a motor to drive the vertical disk (F) at a constant rate of 210 ± 20° per minute. Other than this change, the motor-driven instrument has the components of the "basic instrument" as described in 6.1.1. The motor is reversible using the switch (N), that preferably also operates an electric brake to stop the disk at any point on the scale. The motor-driven version of the instrument shown in Fig. 1 is the instrument in most wide use today, and is the basis of this test method.

6.1.3 More recently, automated versions of the basic instrument have become available. These are two types: automatic reading of results (only), and automation of instrument operation as well as reading of results.

6.1.3.1 Devices are available that may be retrofitted to the basic instrument for automatically determining and recording the scale readings (see section 10.2). Results are displayed on a digital readout device. In addition, the retrofitted unit may provide a signal output suitable for transmission to a standalone printer or an integrated acquisition system.

6.1.3.2 Totally automated versions of the basic motor-driven instrument (see 6.1.2), incorporating the components described in 6.1.2.1, and in addition automatically controlling the entire sequence of operations described in 10.2, are also available.

7. Sampling

7.1 *Acceptance Sampling*—Acceptance sampling shall be done in accordance with Practice D 585.

7.2 *Sampling for Other Purposes*—The sampling and the number of test specimens depends upon the purpose of the testing. Practice E 122 is recommended.

7.3 In sampling, take care not to bend, roll, score, or otherwise damage the area to be tested.

8. Test Specimens

8.1 From each test unit cut five test specimens, 38.1± 0.3 mm (1.50± 0.01 in.) wide by 70 ± 1 mm (2.75 ± 0.05 in.) long, with the length parallel to the machine direction. Cut another set of five test specimens with the length at right angles to the machine direction. All cut specimens must be free from scores or blemishes. A special cutter for cutting the samples may be available from the vendor, or a high-precision cutting board may be used.

9. Preparation of Apparatus

9.1 Place the instrument on a firm, level surface. A standard laboratory bench is generally quite satisfactory and should be checked with a carpenter's level to verify that it is level (front-to-back, side-to-side) when the instrument is initially installed. Set the loading disk (F) at zero and place a chosen weight (P) on the pendulum stud. If possible, choose a weight such that the resulting readings for the specimen to be tested are near the center of the measured test range. Close the two jaws of the vice (C) to meet on the center line of the pendulum and adjust the legs of the instrument so that the engraved mark (E) coincides with zero on the scale of M. Level the instrument front to back as well as side to side.

9.2 Displace the pendulum 15° and release it to check the bearing friction. It should make at least 20 complete swings before coming to rest. If it does not, check for obvious contamination by dust particles. In the absence of any obvious problem, contact the vendor to arrange service or maintenance.

9.3 If the instrument has a brake, check that it functions properly. It should "freeze" (stop and securely hold) the rotating disk (F) in place within less than one second after it

AVA Documents
Document Sharing Hub

Full document details: ASTM D5342-97(2002)