This international standard was developed in accordance with internationally recognized principles on standardization established in the Decision on Principles for the Development of International Standards, Guides and Recommendations issued by the World Trade Organization Technical Barriers to Trade (TBT) Committee.

Designation: D5500 – 20a

Standard Test Method for Vehicle Evaluation of Unleaded Automotive Spark-Ignition Engine Fuel for Intake Valve Deposit Formation[1]

This standard is issued under the fixed designation D5500; the number immediately following the designation indicates the year of original adoption or, in the case of revision, the year of last revision. A number in parentheses indicates the year of last reapproval. A superscript epsilon (ε) indicates an editorial change since the last revision or reapproval.

1. Scope*

1.1 This test method covers a vehicle test procedure for evaluation of intake valve deposit formation of unleaded spark-ignition engine fuels. This test method uses a 1985 model BMW 318i[2] vehicle. Mileage is accumulated following a specified driving schedule on either public road or test track. This test method is adapted from the original BMW of North America/Southwest Research Institute Intake Valve Deposit test and maintains as much commonality as possible with the original test. Chassis dynamometers shall not be used for this test procedure as the BMW NA/SwRI IVD Test was not intended to be applicable to chassis dynamometers and no correlation between road operation and chassis dynamometers has been established.

NOTE 1—If there is any doubt as to the latest edition of Test Method D5500, contact ASTM International.

1.2 The values stated in SI units are to be regarded as standard. The values given in parentheses after SI units are provided for information only and are not considered standard.

1.3 *This standard does not purport to address all of the safety concerns, if any, associated with its use. It is the responsibility of the user of this standard to establish appropriate safety, health, and environmental practices and determine the applicability of regulatory limitations prior to use.* Specific statements on hazards are given throughout this test method.

1.4 *This international standard was developed in accordance with internationally recognized principles on standardization established in the Decision on Principles for the Development of International Standards, Guides and Recommendations issued by the World Trade Organization Technical Barriers to Trade (TBT) Committee.*

2. Referenced Documents

2.1 *ASTM Standards:*[3]

D235 Specification for Mineral Spirits (Petroleum Spirits) (Hydrocarbon Dry Cleaning Solvent)

D4175 Terminology Relating to Petroleum Products, Liquid Fuels, and Lubricants

D4814 Specification for Automotive Spark-Ignition Engine Fuel

2.2 *ANSI Standard:*

MC 96.1 American National Standard for Temperature Measurement Thermocouples[4]

3. Terminology

3.1 For general terminology, refer to Terminology D4175.

3.2 *Definitions:*

3.2.1 *base fuel, n—in automotive spark-ignition engine fuels*, a material composed primarily of hydrocarbons that may also contain oxygenates, anti-oxidants, corrosion inhibitors, metal deactivators, and dyes but does not contain deposit control or lead additives.

3.2.1.1 *Discussion*—A jurisdiction may set limits on lead content from all sources.

3.2.2 *deposit control additive, n*—material added to the fuel to prevent or remove deposits in one or more of the engine fuel, intake, and combustion systems.

3.2.2.1 *Discussion*—For the purpose of this test method, the performance evaluation of a deposit control additive is limited to the tulip area of intake valves.

3.2.3 *driveability, n—in vehicles equipped with internal combustion engines*, the quality of a vehicle's performance characteristics under a range of conditions as perceived by the operator. **D4814**

3.2.3.1 *Discussion*—The operating conditions may include cold starting and warm-up, acceleration, idling, and hot start.

[1] This test method is under the jurisdiction of ASTM Committee D02 on Petroleum Products, Liquid Fuels, and Lubricants and is the direct responsibility of Subcommittee D02.A0.01 on Gasoline and Gasoline-Oxygenate Blends.

Current edition approved June 1, 2020. Published June 2020. Originally approved in 1994. Last previous edition approved in 2020 as D5500 – 20. DOI: 10.1520/D5500-20A.

[2] Originally obtained from BMW NA new car dealerships in the United States as a 1985 model year vehicle, the vehicle is currently available through the used vehicle market.

[3] For referenced ASTM standards, visit the ASTM website, www.astm.org, or contact ASTM Customer Service at service@astm.org. For *Annual Book of ASTM Standards* volume information, refer to the standard's Document Summary page on the ASTM website.

[4] Available from American National Standards Institute (ANSI), 25 W. 43rd St., 4th Floor, New York, NY 10036, http://www.ansi.org.

***A Summary of Changes section appears at the end of this standard**

Copyright © ASTM International, 100 Barr Harbor Drive, PO Box C700, West Conshohocken, PA 19428-2959. United States

Documents
Document Sharing Hub

Full document details: ASTM D5500-20a

The performance characteristics may include engine hesitation, stumble, and stall. D4814

3.2.4 *intake valve deposit, n*—material accumulated on the tulip area of the intake valve of internal combustion engines, generally composed of carbon, decomposition products of fuel, lubricant, and additives, and atmospheric contaminants.

3.3 *Definitions of Terms Specific to This Standard:*

3.3.1 *alternate mileage accumulation (AMA) driving cycle, n*—a driving schedule that is based on the U.S. Environmental Protection Agency Durability Driving Schedule, which contains various driving cycles for durability testing of emission control systems.[5]

3.3.2 *intake system, n*—components of the engine whose function it is to prepare and deliver an air/fuel mixture to the combustion chamber and includes the throttle, intake manifold hot spot and runners, exhaust gas recirculation (EGR) and positive crankcase ventilation (PCV) ports, cylinder head runners and ports, intake valves, and fuel injectors.

3.3.3 *merit rating, n*—the visual evaluation by a trained rater of the volume of deposits accumulated on a specific engine component based on a comparison with a reference scale (see CRC Manual 16[6]).

3.3.4 *test fuel, n*—base fuel with or without the addition of a deposit control additive which is used to accumulate mileage as described in this test method.

3.3.5 *vehicle exhaust emissions (tailpipe), n*—combustion products from the test fuel including unburned hydrocarbons (HC), carbon monoxide (CO), carbon dioxide (CO_2), oxygen (O_2), and oxides of nitrogen (NO_x).

4. Summary of Test Method

4.1 This test method utilizes a 1985 BMW 318i vehicle equipped with a four-speed automatic transmission and air conditioning. This vehicle is equipped with a four-stroke cycle, four-cylinder engine having a total displacement of 1.8 L. The cylinder head is an aluminum alloy casting and the cylinder block is cast iron. The engine features an overhead camshaft, hemispherical combustion chambers, two valves per cylinder, and electronic port fuel injection.

4.2 Each test begins with a clean, rebuilt cylinder head that meets a rigid set of specifications. New, weighed intake valves are used to rebuild the cylinder head. A standard engine oil is used for each test and a new oil filter is installed. All routine vehicle maintenance is performed in accordance with BMW Schedule I and Schedule II service lists. The test vehicle's fuel system is flushed of fuel from the previous test. The vehicle fuel tank is then filled with the new test fuel. The vehicle is subjected to a rigorous quality control procedure to verify proper engine and overall vehicle operation. To ensure compliance to the test objective, a data logger is active at all times after the test has begun, during all mileage accumulation and soak time.

4.3 The vehicle is operated on a cycle consisting of 10 % (based on mileage) city (part of the AMA driving schedule), 20 % suburban, and 70 % highway mode per day. This cycle is repeated to accumulate a minimum of 16 090 km (10 000 miles) but no more than 16 250 km (10 100 miles).

4.4 After the required mileage (see 10.4.5) has been accumulated, the cylinder head is removed from the engine and disassembled. The valves are weighed, visually assigned merit ratings, and photographed. Operational and mechanical criteria are then reviewed to determine if the test shall be considered valid.

5. Significance and Use

5.1 *Test Method*—It was determined through field testing that intake valve deposits could adversely affect the driveability of certain automobiles.[7] Southwest Research Institute and BMW of North America (BMW NA) jointly conducted testing to develop this test method to determine an unleaded automotive spark-ignition engine fuel's propensity to form intake valve deposits. This testing concluded that if an automotive spark-ignition engine fuel could keep intake valve deposits at or below a certain average weight per valve at the end of mileage accumulation, then that automotive spark-ignition engine fuel could be used in the BMW vehicle-engine combination for a specified period without intake valve deposits causing driveability degradation. Minimizing intake valve deposits may be necessary to maintain vehicle driveability and tailpipe emissions control.

5.1.1 *State and Federal Legislative and Regulatory Action*—Legislative activity and rulemaking primarily by California Air Resources Board[8] and the Environmental Protection Agency[9] necessitate the acceptance of a standardized test method to evaluate the intake system deposit forming tendency of an automotive spark-ignition engine fuel.

5.1.2 *Relevance of Results*—The operating conditions and design of the engine and vehicle used in this test method are not representative of all modern automobiles. These factors shall be considered when interpreting test results.

5.2 *Test Validity:*

5.2.1 *Procedural Compliance*—The test results are not considered valid unless the test is completed in compliance with all requirements of this test method. Deviations from the parameter limits presented in Sections 10 and 11 will result in an invalid test. Engineering judgment shall be applied during conduct of the test method when assessing any anomalies to ensure validity of the test results.

5.2.2 *Vehicle Compliance*—A test is not considered valid unless the vehicle met the quality control inspection requirements as described in Section 10.

[5] Code of Federal Regulations, Title 40, Part 86, Appendix IV.

[6] CRC Manual 16, Carburetor and Induction System Rating Manual. Available from the Coordinating Research Council Inc., 219 Perimeter Center Parkway, Atlanta, GA 30346.

[7] Bitting, B., et al., "Intake Valve Deposits-Fuel Detergency Revisited," SAE 872117, Society of Automotive Engineers, 1987.

[8] State of California Air Resources Board-Stationary Source Division, Test Method for Evaluating Intake Valve Deposits (IVDs) in Vehicle Engines (California Code of Regulations, Title 13, Section 2257).

[9] Clean Air Act Amendments of 1990.

Documents
Document Sharing Hub

Full document details: ASTM D5500-20a

6. Apparatus

6.1 *Automobile*—The test automobile used for this procedure is a 1985 model BMW 318i. The powerplant is a 1.8 L-line four-cylinder, four-stroke cycle engine with single overhead camshaft, two valves per cylinder, and electronic port fuel injection. Vehicles equipped with four-speed automatic transmissions and air conditioning are required for the test method. Both 49 state and California engine calibrations are allowed for this test method.

6.1.1 *Engine Cooling System*—Experience has shown that the original equipment cooling system has marginal performance at ambient conditions above approximately 35 °C (95 °F). To ensure engine coolant temperature compliance with test validity criteria in 10.4.3, the vehicle may be retrofitted with the radiator and other appropriate components as outlined in Annex A1.

6.1.2 *Electronic Port Fuel Injectors*—Prior to installation, all injectors shall be evaluated for conformance to spray-pattern and flow rate acceptance criteria (see 8.5). Injectors may be reused if the criteria are satisfied.

6.1.3 *Tires*—Tires shall be size P195/60R14, maintained at 190 kPa ± 10 kPa (28 psi ± 1 psi).

6.1.4 *Miscellaneous Parts*—All powertrain components, front end accessory drive, air intake system, and exhaust system, except as specified, shall be original equipment, original equipment manufacturer replacement parts, or equivalent.

6.1.5 *New Engine Parts Required*—Table 1 contains those new parts with the corresponding BMW NA part number to be used for preparing the vehicle to run this test method.

6.1.5.1 Other parts may be necessary and are listed in Annex A2.

6.1.6 *Disable Cruise Control*—Disconnect cruise control cable from the throttle. The cruise control shall not be used for this test method.

6.1.7 *Reusable Engine Parts*—The parts listed in Table 2 may be reused. The replacement frequency is noted in the footnotes. All parts shall be discarded when they become unserviceable. See Annex A3 for guidelines regarding the reuse of parts.

6.2 *Laboratory Facilities:*

6.2.1 *Engine/Cylinder Head Build-up and Measurement Area*—The ambient atmosphere of the engine build-up and measurement area shall be reasonably free of contaminants and maintained at a uniform temperature ±3 °C (±5 °F) between 10 °C to 27 °C (50 °F to 80 °F). Uniform temperature is necessary to ensure repeatable dimensional measurements and deposit evaluation. The specific humidity shall be maintained at a uniform comfortable level.

TABLE 1 New Engine Parts Lists

Part	Part No.
Filter, fuel	13 32 1 270 038
Filter, oil	11 42 1 278 059
Gasket, head set	11 12 1 287 381
Gasket, water	11 51 0 686 135
Jet valve, nozzle	11 12 1 250 937
Spark plug	12 12 1 272 128
Thermostat	11 53 1 468 056
Valve, intake	11 34 1 254 625

TABLE 2 Reusable Engine Parts

Air flow meter	Idle control valve
Air pressure sensor	Ignition coil
Alternator	Ignition wire set[A]
Camshaft	Intake manifold
Camshaft drive	Intake, rocker shaft
Cylinder block assembly[B]	Lambda probe
Cylinder head	O_2 sensor
Distributor	Pump, water
Distributor cap	Radiator
Electronic engine control computer unit	Radiator cooling fan
Engine wiring harness	Rocker arm
Exhaust rocker shaft	Rotor
Exhaust system	Sensor, temperature fan
Filter, air[A]	Sensor, vacuum advance
Fuel injectors	Throttle body
Front end accessory drive	Valve springs[C]
Idle control relay	

[A] These parts shall be changed in accordance with BMW NA Service Schedule I (Annex A4), or more frequently.
[B] The cylinder block can be reused for approximately ten tests (160 000 km) (100 000 miles), depending on condition of cylinder head bolt holes (radial cracks appear on the block deck) and cylinder bore wear. (Refer to the BMW 318i Service Manual which is available from BMW NA dealer service departments.)
[C] Valve springs may be reused as long as they meet the procedural requirements for tension in 8.4.12.

6.2.2 *Part Rating and Intake Valve Weighing Area*—The ambient atmosphere of the rating and weighing area shall be reasonably free of contaminants. The induction system ratings shall be performed in accordance to CRC Manual 16, Carburetor and Induction System Rating Manual.

6.2.3 *Fuel Injector Testing Area*—The ambient atmosphere of the fuel injector testing area shall be reasonably free of contaminants. The temperature and humidity shall be maintained at a uniform level to ensure repeatable measurements. This area shall be ventilated for health and safety reasons in accordance with all regulations. (**Warning—**Provide adequate ventilation and fire protection in areas where flammable or volatile liquids and solvents, or both, are used. Suitable protective clothing is recommended.)

6.2.4 *Intake Valve Rinsing and Parts Cleaning Area*—The ambient atmosphere of the intake valve rinsing and parts cleaning area shall be reasonably free of contaminants. The temperature shall be maintained at ±3 °C (±5 °F) between 10 °C to 27 °C (50 °F to 80 °F). The specific humidity shall be maintained at a uniform comfortable level. Because of the delicate nature of the deposits, do not subject the deposits to extreme changes in temperature or humidity. (**Warning—**See 6.2.3.)

6.2.5 *Garage/Maintenance Area*—The ambient atmosphere of the garage/maintenance area shall be reasonably free of contaminants. The temperature and humidity shall be maintained at a uniform, comfortable level. Because of the delicate nature of the deposits, do not subject the deposits to extreme changes in temperature or humidity. (**Warning—**Adequate ventilation and fire protection are necessary in areas where automotive spark-ignition engine fuel and deposit control additives are handled, and also when concerning the venting of the vehicle exhaust and working on vehicle fuel systems. Suitable protective clothing is recommended.)

AVA Documents
Document Sharing Hub

Full document details: ASTM D5500-20a

6.2.6 *Test Fuel Blending Facilities*—Instead of supplying a finished test fuel, the test sponsor may supply concentrated additive in bulk to the test laboratory. The test requestor shall obtain concurrence from the test laboratory regarding the supply of base fuels and additives and their packaging. For those laboratories offering the capability of blending additive and base fuel, the laboratories shall have the ability to handle and blend the additive into fuel supplied in either bulk or 210 L (55 gal) drums, or both. The laboratory shall have an appropriate balance or graduated cylinder to blend the additive at the recommended concentrations expressed as a volumetric or mass ratio. The base fuel and additive shall be placed, at the appropriate ratio, into 210 L (55 gal) drums or bulk storage tanks and clearly labeled. Provisions to stir or recirculate the fuel/additive blend to ensure a homogeneous mixture are necessary. Safe, clean storage shall be provided for base fuel, additive, and test fuel. The ambient atmosphere of the additive blending facility area shall be reasonably free of contaminants. Retain a 1 L sample of the fuel blend. Hold this sample for one month or release to test requestor. (**Warning—**See 6.2.5.)

6.2.7 *Fuel Storage and Refueling Facilities*—Sufficient finished test fuel shall be stored at the refueling station in clearly labeled drums or dispensers. In laboratories that may run several different test methods concurrently, dispensers or hand pumps for the drums shall not be switched between dissimilar test fuels. To ensure the test fuels are not contaminated either by other test fuels or foreign matter, a suitable structure shall be provided to contain the test fuels safely. The laboratory shall have a protocol to ensure the test vehicle receives the proper test fuel. (**Warning—**See 6.2.5.)

6.3 *Laboratory Equipment:*

6.3.1 *Data Acquisition*—A data acquisition device, capable of providing the raw data, as outlined in 10.4, is required.

6.3.2 *Temperature Measurement Equipment*—Temperature measurement equipment and locations for the required temperatures are specified in 6.3.2.1 – 6.3.2.4. Alternative temperature measurement equipment may be used if equipment performance can be demonstrated. The accuracy and resolution of the temperature measurement sensors and the complete temperature measurement system shall follow guidelines detailed in the Research Reports "Data Acquisition Task Force Report" and "Instrumentation Task Force Report to the ASTM Technical Guidance Committee."[10]

6.3.2.1 If thermocouples are used, all thermocouples except the intake air thermocouple shall be premium, sheathed types. The intake air thermocouple may be an open-tip type. Thermocouples of 3.2 mm, 4.8 mm, or 6.4 mm (0.125 in., 0.1875 in., 0.25 in.) diameter may be used. However, 3.2 mm thermocouples are recommended at locations which require short immersion depths to prevent undesirable temperature gradients. Thermocouple, wires, and extension wires shall be matched to perform in accordance with the limits of error as defined by ANSI publication MC 96.1. Type J (Iron-Constantan), Type T (Copper-Constantan), or Type K (Chromel-Alumel) thermocouples are acceptable.

6.3.2.2 *Intake Air Temperature*—Install the tip of the temperature measuring device midstream in the intake air horn (see A4.1). A 6.4 mm (0.25 in.) thermocouple is adequate if an open-tip thermocouple is used.

6.3.2.3 *Engine Coolant Outlet*—Install the thermocouple tip at the center of the flow stream at the engine out radiator hose connection (see A4.1). The recommended thermocouple diameter is 3.2 mm (0.125 in.).

6.3.2.4 *Engine Oil Sump Temperature*—Install the thermocouple tip such that it extends 25 mm (1 in.) inside the oil sump mounted in the drain plug (see A4.1). The recommended thermocouple diameter is 3.2 mm (0.125 in.).

6.3.3 *Vehicle Speed*—A suitable sensor shall be utilized to measure vehicle speed ±2 km/h (±1 mph).

6.3.4 *Engine-On Time*—A suitable interface shall be utilized to connect ignition power to the data acquisition equipment.

6.4 *Garage Equipment:*

6.4.1 *Timing Light*—A suitable adjustable timing light shall be used to check ignition timing as specified in 8.7.5.2.

6.4.2 *Multimeter*—A multimeter capable of measuring milliamperes is required to set idle mixture as specified in 8.7.5.4.

6.4.3 *BMW Service Test Unit*—A BMW Service Test Unit (Part Number 12 6 400) is necessary to adjust idle carbon monoxide as specified in 8.7.5.5.

6.4.4 *Computerized Diagnostic Machine*—A computerized diagnostic machine is used to verify proper engine operation by measuring vehicle tailpipe exhaust oxygen, carbon monoxide, carbon dioxide, hydrocarbons, ignition performance, and charging system performance. Typical values are given in 8.8.4.

6.4.5 *Throttle Retainer*—A device constructed as shown in Fig. 1 may be used to hold the throttle open during tune-up procedures.

6.5 *Special Measurement and Assembly Equipment:*

6.5.1 *Graduated Cylinder*—Blending of the deposit control additive may be required and the concentration may be given as a volumetric ratio. A 1000 mL graduate is recommended.

NOTE 2—Volumetric measurement of the deposit control additive is not recommended. Mass-based measurement is preferred.

6.5.2 *Analytical Balance*—Blending of the additive may be required and the concentration may be given as a mass ratio.

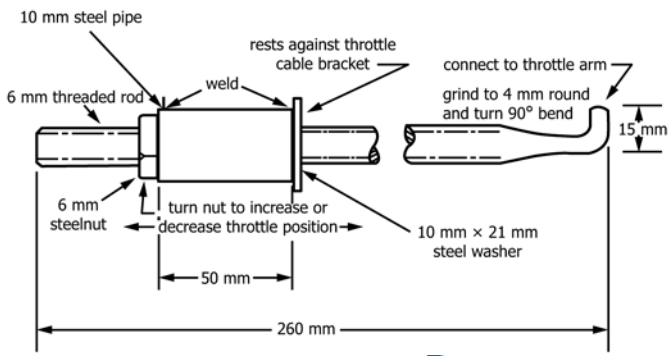

FIG. 1 Throttle Retainer

[10] Supporting data have been filed at ASTM International Headquarters and may be obtained by requesting Research Report RR:D02-1210 and RR:D02-1218. Contact ASTM Customer Service at service@astm.org.

AVA Documents
Document Sharing Hub
Full document details: ASTM D5500-20a

An analytical balance capable of 0.01 g resolution with a maximum capacity of at least 2000 g is recommended. Also, a balance is required to determine intake valve weight, which is approximately 100 g, with accuracy of 0.25 % of full scale and resolution of 0.0001 g. The balance shall be calibrated following the manufacturer's procedure and frequency recommendations.

6.5.3 *Desiccator*—An airtight chamber with lid shall contain an adequate amount of desiccant to maintain a relatively moisture-free environment for intake valves with deposits (see 7.10).

6.5.4 *Oven*—A natural convection oven shall be used that is capable of maintaining 93 °C ± 2 °C (200 °F ± 5 °F) for evaporating the cleaning solvents from the valves. The oven shall have sufficient dimensions to stand the valve upright. There shall be no arcing contacts in the oven and the oven shall be installed in a fume hood.

6.5.5 *Power Wire Wheel*—A power wire wheel (bench grinder fitted with a fine, 15 cm (6 in.) diameter steel wire wheel) shall be used to clean the intake valves as specified. See 8.3.1 and 10.1.

6.5.6 *Walnut Shell Blaster*—Similar to a sand blaster, the walnut shell blaster uses shop air pressure; however, a fine, abrasive media of crushed walnut shells is used instead of sand. The walnut shells are sufficiently abrasive to remove carbon while not removing metal from the surface being cleaned. The walnut shell blaster technique is more effective than solvents and generally preferred over a wire brush for removing carbon deposits from the valves and the cylinder head.

6.5.7 *Valve Stem and Guide Measuring Equipment*—Special equipment is necessary to measure valve stem-to-guide clearances in the cylinder head as required in this test method (see 8.4.1). Any of the methods listed below are acceptable for measuring valve stem-to-guide clearance. One method is specified in the BMW 318i Service Manual. Other commercially available automotive equipment may also be used. Alternatively, air bore gaging equipment can be used to measure the guide diameter, and a micrometer can be used to measure the valve stem diameter.

NOTE 3—Accurate measurements are mandatory to determine stem-to-guide clearance as this parameter can affect oil consumption and intake valve deposit accumulation.

6.5.8 *Vernier Caliper*—A vernier caliper is necessary to measure valve seat width of the cylinder head as required in this test method (see 8.4.4).

NOTE 4—Accurate measurement of valve seat width is required as this parameter can affect heat transfer from the valves, particularly the intake valve and the surface where deposits may accumulate, ultimately affecting deposit accumulation.

6.5.9 *Valve Spring Compression Testing Machine*—A valve spring compression testing machine capable of assessing valve spring condition as specified in 8.4.12 is required.

6.5.10 *Cylinder Head Stand*—A BMW NA cylinder head stand (BMW NA Part Number 11 1 047), or equivalent, shall be used to securely hold the cylinder head during assembly and disassembly.

6.5.11 *Valve Lapping Tool*—A device to rotate or oscillate the valves on the seat shall be used to lap the valves. Suitable valve lapping tools are available from automotive tool supply sources.

6.5.12 *Valve and Valve Seat Cutting Equipment*—Equipment may be needed to ensure valve and valve seat mating quality as outlined in 8.4.4. Acceptable equipment is available from automotive tool supply sources.

6.5.13 *Blowby Meter*—The blowby meter is a device to measure flow rate of the gas passing the piston rings and entering the crankcase. This flow rate is a method to evaluate the condition of the piston rings and cylinder bore and, therefore, is used as a quality assurance and test rejection criteria. The device shall have an accuracy of 5 % full scale and a resolution of 0.3 L/s (0.01 CFM).

6.5.14 *Fuel Injector Test Rig*—A suitable device capable of accurate, repeatable flow measurement of port fuel injectors is required. This device shall be capable of performing necessary port fuel injector evaluations as outlined in 8.5. No suitable commercially available apparatus has been identified.

6.5.15 *Special BMW 318i Service Tools*—Several special tools are necessary for rebuilding the cylinder head.

6.5.15.1 *Rocker Shaft Removal Tool*—A rocker shaft removal tool may be constructed as shown in Fig. 2.

6.5.15.2 *Valve Stem Seal Installation Tool*— BMW NA Part Number 11 1 200.

6.5.15.3 *Valve Lash Adjustment Tool*—BMW NA Part Number 11 3 070.

7. Reagents and Materials

7.1 *Additive/Base Fuel*—Some test requestors may require the test fuel be blended at the test laboratory and, therefore, will supply the neat deposit control additive and untreated base fuel. The test requestor shall supply the deposit control additive and base fuel in appropriate volumes and packaging to ensure

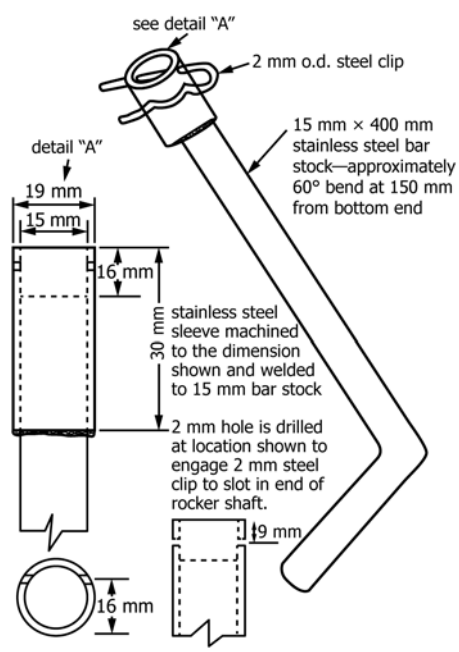

FIG. 2 Rocker Shaft Removal Tool

AVA Documents
Document Sharing Hub

Full document details: ASTM D5500-20a

safe and efficient handling. Blending instructions detailing the concentration ratio, either volumetric-based or mass-based, shall accompany all deposit control additives. Mass-based measurement is preferred. However, it is most desirable to have the additive supplied in premeasured, individual containers. The blended fuel shall be clearly identified.

7.1.1 *Base Fuel*—The base fuel used for this test procedure shall be typical of commercial unleaded automotive spark-ignition engine fuel. The base fuel may contain oxygenates typical of those being used commercially. The base fuel shall allow the vehicle to operate satisfactorily (that is, no knocking, surging, and so forth) creating no driver complaints.

7.1.2 *Additive/Base Fuel Shipment and Storage*—The additive shall be shipped in a container as dictated by safety and environmental regulations. The additive shall be stored in accordance with all applicable safety and environmental regulations.

7.2 *Test Fuel*—A blended test fuel shall be a homogeneous blend of additives and base fuel. Sufficient fuel shall be blended before the start of the test to complete a selected mileage interval which may be 10 000 miles or less. If the initial mileage interval is less than 10 000 miles, an additional fuel blend consisting of the same base fuel and same concentration/deposit control additive may be done if the vehicle is to complete the 10 000 mile test. The fuel may be stored in drums or tankage, and shall be clearly labeled to prevent misfueling. Quantities of fuel and additive blended and dispensed shall be measured and recorded for use in determining the fuel consumption, which is one of the operational validity criteria. Approximately 1900 L (500 gal) of fuel are required for this test method.

7.3 *Engine Oil/Assembly Lubricant*—The standard engine oil and assembly lubricant used for all tests shall be commercial quality (API SG, EC II) SAE 15W40 multigrade oil. Approximately 10 L (10 qt) are needed for this test method, including engine assembly, initial crankcase fill, and 8000 km (5000 mile) change.

7.4 *Engine Coolant*—The coolant is a mixture of equal volumes of a commercial ethylene glycol-based low-silicate antifreeze and distilled or demineralized water. Do not use uninhibited ethylene glycol. The coolant should offer protection from aluminum corrosion (cylinder head) and deposition of aluminum salts (radiator).

7.5 *Solvents and Cleaners:*

7.5.1 *Normal-Hexane or Cyclohexane Valve Rinse*—The valves are rinsed with either *n*-hexane or cyclohexane. (**Warning—**See 6.2.3.)

NOTE 5—The California Air Resources Board specifically requires the use of *n*-hexane to rinse the intake valves. When conducting this test method for approval to market automotive spark-ignition engine fuels in the State of California, the test method shall be conducted using *n*-hexane as the valve rinse solvent.

NOTE 6—Reagent-grade chemicals will be used for all test procedures. Unless otherwise noted, it is intended that all reagents conform to the specifications of the Committee on Analytical Reagents of the American Chemical Society,[11] where such specifications are available. Other grades may be used provided it is first ascertained that the reagent is of sufficient purity to permit its use without lessening the accuracy of the determination.

7.5.2 *Aerosol Spray Cleaner*—Wash all new intake valves and other parts (that is, valve train parts, cylinder head, intake manifold, throttle body) as required with an aerosol spray cleaner to remove any residue remaining from manufacture or deposits or fluid residues from the previous test.

7.5.3 *Naphtha Solvent*—Stoddard solvent conforming to Type I of Specification D235 is recommended. Proprietary solvents of this general type may be used. This fluid may be used for cleaning parts (that is, valve train parts cylinder head, intake manifold, throttle body) and as a fuel injector test fluid.

7.6 *Fuel Injector Test Fluid:*

7.6.1 *Naphtha Solvent*—See 7.5.3.

7.6.2 *Isooctane*—Reagent grade 2,2,4-Trimethylpentane may be used (see Note 6).

7.7 *Sealing Compounds*—Sealing compounds are not specified. Engineering judgment shall be used governing the use of sealing components. (**Warning—**Silicone-based sealers may elevate the indicated silicone content of the used engine oil and cause problems with exhaust gas oxygen sensors. Allow sufficient curing time prior to running the engine.)

7.8 *Valve Lapping Compound*—Grade A280-grit valve lapping compound shall be used.

7.9 *Crushed Walnut Shells*—A walnut shell blaster may be used to remove carbon and deposits from the head. Clean, fresh walnut shells shall be used. This media is available commercially from industrial and automotive supply sources.

7.10 *Desiccant*—This granular form of anhydrous $CaSO_4$ is placed in an airtight container. The material absorbs moisture. The appropriate gradation shall be used.

8. Preparation of Apparatus

8.1 *Cylinder Head Disassembly*—This section is written under the assumption that the cylinder head has been removed from the engine as outlined in 9.5.1 and the intake and exhaust valves have been removed as outlined in 9.5.2. Any disassembly instructions not detailed in 8.1.1 – 8.1.5 shall be completed in accordance with the instructions in the BMW 318i Service Manual. Disassemble and thoroughly clean the head before each test using specified solvents (see 7.5) and walnut shell blaster (see 6.5.6).

8.1.1 Mount the cylinder head on the fixture (or equivalent) (see 6.5.10).

8.1.2 With the head in an upward position (combustion chamber down), remove the eight exhaust manifold bolts along with the manifold and gasket. Discard the gasket.

[11] *ACS Reagent Chemicals, Specifications and Procedures for Reagents and Standard-Grade Reference Materials*, American Chemical Society, Washington, DC. For suggestions on the testing of reagents not listed by the American Chemical Society, see *Analar Standards for Laboratory Chemicals*, BDH Ltd., Poole, Dorset, U.K., and the *United States Pharmacopeia and National Formulary*, U.S. Pharmacopeial Convention, Inc. (USPC), Rockville, MD.

AVA Documents
Document Sharing Hub

Full document details: ASTM D5500-20a

8.1.3 Remove the five bolts securing the distributor flange to the head and remove the flange. Remove any gasket material or deposits from the mating surfaces with a gasket scraper.

8.1.4 Remove and discard intake and exhaust valve stem seals.

8.1.5 Remove the head from the stand and place the head in a suitable area for cleaning.

8.2 *Cleaning Components to Be Reused*—Thoroughly clean the cylinder head, intake manifold, and throttle body before each test using specified solvents, walnut shell blaster, gasket scraper, or other means as appropriate. Avoid using a wire brush on cylinder heads and other aluminum alloy surfaces as this tool may reduce the useful life of the cylinder head.

NOTE 7—California Air Resources Board requires the use of a wire brush to clean cylinder heads. When conducting this test method for approval to market automotive spark-ignition engine fuels in the State of California, 8.2 shall be conducted using a wire brush.

8.2.1 *Cylinder Head*—Clean the intake and exhaust manifold mating surfaces of any gasket material or deposit using a gasket scraper, the appropriate solvent (see 7.5), or a walnut blaster, or both.

8.2.1.1 Clean the head by spraying it thoroughly with solvent to remove oil, fuel, and lapping compound. Pour solvent through all coolant and oil passages, and blow dry with compressed air. Be certain to blow air through all oil and coolant passages. (**Warning—**Wear eye protection and other protective clothing when spraying solvents and when using compressed air to blow debris from parts.)

8.2.1.2 Remove all hardened deposits from the cylinder head with a walnut shell blaster or a wire brush. Pay particular attention to the intake and exhaust ports and the combustion chambers. After all deposits are removed, blow the head out with compressed air to remove any residual walnut shell material from the water and oil passages.

8.2.1.3 Rinse the head, including the oil and coolant passages, again with solvents and blow dry with compressed air.

8.2.2 *Intake Manifold*—Clean the cylinder head and throttle body mating surfaces and fuel injector tips of any gasket material or deposit using a gasket scraper and the appropriate solvents (see 7.5) or a walnut shell blaster, or both.

8.2.2.1 Clean the intake runner with aerosol cleaner. Rest the intake manifold on its side as the cleaner is sprayed so that it will drain through the runner and out the side that attaches to the head. Continue to spray cleaner into the runner until the fluid draining out is clear. Be sure to spray and clean the fuel injector tips which are still installed in the runner with solvent only. Dry the inside of the runner with a clean rag.

8.2.2.2 The fuel rail and injectors are removed from the intake runner. Remove the injectors from the fuel rail by removing the retaining clips from the rail which secure the injectors.

8.2.3 *Throttle Body*—Clean the throttle body mating surfaces of any gasket material or deposit using a gasket scraper and the appropriate solvents (see 7.5) or a walnut shell blaster, or both.

8.2.3.1 Clean the throttle body with aerosol cleaner. Rest the throttle body on its side as the cleaner is sprayed so it will drain through the throttle bore and out the side which attaches to the head. Make sure to clean all areas of the throttle body. Continue to spray cleaner into the throttle body until the fluid draining out is clear. Dry the inside of the throttle body with a clean rag.

8.2.4 *Cylinder Block*—Clean the cylinder head mating surfaces and piston crowns of any gasket material or deposit, using a gasket scraper, the appropriate solvents (see 7.5), a walnut shell blaster, or other appropriate tools, or combination thereof.

8.2.4.1 Piston crowns shall be cleaned with a gasket scraper, fine wire brush, or similar tools. Do not allow debris to fall into the water jacket or oil passages. Care shall be exercised so that the piston crowns are not damaged during cleaning. A shop-type vacuum cleaner may be used to evacuate the loose carbon from the piston and piston/bore crevice.

NOTE 8—Before cleaning the piston crowns, ensure that photographs have been taken (if requested).

8.3 *Valve Preparation*—Clean the valves before assembly measurements are taken. After measurements are taken, the seating surfaces checked or adjusted, or both, and the valves lapped, the intake valves, not the exhaust valves, are weighed.

8.3.1 *Intake Valve Cleaning*—New intake valves shall be used.

8.3.1.1 Mark the new intake valves as shown in Fig. 3 in accordance with the test vehicle and cylinder in which they will be installed.

8.3.1.2 Before weighing the new intake valves, they shall be thoroughly buffed to remove any surface oxidation. Perform this using a bench grinder fitted with a wire wheel brush (see 6.5.5). The entire valve shall be buffed, not just the tulip.

8.3.1.3 After buffing, spray the valve with *n*-hexane, cyclohexane, or an aerosol cleaner (see 7.5) and wipe completely with a dry, clean rag.

8.3.2 *Intake Valve Weighing*—Weigh the intake valve after completing the preparation of the intake valve seat area, including lapping (see 8.4.1 – 8.4.5).

8.3.2.1 *Valve Rinse*—Wash the valves gently with *n*-hexane or cyclohexane. This procedure shall be performed only once. The solvent is to be discharged from a hand squeeze bottle onto the valve. Gently rinse the valve starting at the top of the stem

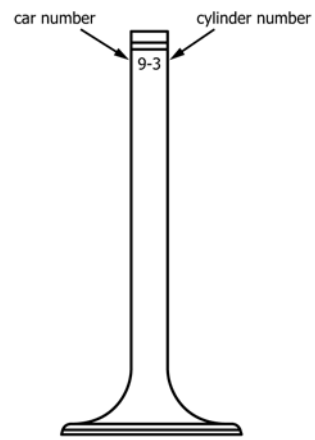

FIG. 3 Location of Valve Identification

AVA Documents
Document Sharing Hub

Full document details: ASTM D5500-20a

and proceeding towards the tulip section. While discharging the solvent, rotate the valve (which is held in gloved hand) to ensure removal of all oily residues. Continue the washing process until the solvent running off the valve is clear. Gently shake off any remaining solvent. (**Warning—**See 6.2.3 and Note 5.)

8.3.2.2 *Removing the Rinse*—Immediately after the wash is complete, place the intake valves inside an oven (see 6.5.4) for 5 min to remove any remaining solvent through vaporization. The oven temperature shall be 93 °C ± 2 °C (200 °F ± 5 °F).

8.3.2.3 *Warm Valve Handling Technique*—Use tongs to transfer the valves from the oven directly into a desiccator.

8.3.2.4 *Desiccator*—The valves shall remain in the desiccator for a minimum of 1 h while they cool to room temperature. Conduct a periodic check of the desiccant to ensure its proper functioning. Monitoring of color change is usually the method employed.

8.3.2.5 Weigh the valves to the nearest 0.0001 g using an analytical balance as specified in 6.5.2. Record the weights and other required data using the form in Fig. 4.

8.3.2.6 The repeatability of the balance between the start and the end of this procedure is to be confirmed by weighing and recording the weight of a reference weight before and after weighing the four valves. Reference shall range from 90 g to 110 g. The *start* and *end* reference weighings shall not differ by more than 0.0010 g. If the absolute difference is greater than 0.0010 g, then repeat 8.3.2.5.

8.3.3 *Exhaust Valve Cleaning:*

8.3.3.1 Prepare the exhaust valves by buffing each with a free wire wheel to remove accumulated deposits. Unlike procedures in 8.3.1 for the intake valves, clean all areas except the stem. Provided that the exhaust valves are still within specifications as described in 8.4.2, they may be reused.

Project No. _____ Technician: _____
Buildup Data: _____ Date: _____
Test No. _____ Vehicle No: _____

MEASURMENTS

Cylinder Number	Position	IN Valve Guide		IN Valve Stern		IN Valve Clearance		EX Valve Guide		EX Valve Stern		EX Valve Clearance		Valve Seat Width
		0°	90°	0°	90°	0°	90°	0°	90°	0°	90°	0°	90°	
1	Top													
	Bottom													
2	Top													
	Bottom													
3	Top													
	Bottom													
4	Top													
	Bottom													

CYLINDER	INTAKE VALVE WEIGHTS	
1	Start of Test _____ End of Test _____ Deposit Weight _____	Clean, End of Test _____ End of Test _____ Deposit Weight _____
2	Start of Test _____ End of Test _____ Deposit Weight _____	Clean, End of Test _____ End of Test _____ Deposit Weight _____
3	Start of Test _____ End of Test _____ Deposit Weight _____	Clean, End of Test _____ End of Test _____ Deposit Weight _____
4	Start of Test _____ End of Test _____ Deposit Weight _____	Clean, End of Test _____ End of Test _____ Deposit Weight _____
		Average Deposit Weight _____

Start of Test Weigh Date: _____ Reference Valve Weight Before: _____ Reference Valve Weight After: _____ Delta: _____ Technician: _____	End of Test Weigh Date: _____ Reference Valve Weight Before: _____ Reference Valve Weight After: _____ Delta: _____ Technician: _____

Comments:

FIG. 4 Valve Measurements and Weights

Documents
Document Sharing Hub

Full document details: ASTM D5500-20a

8.4 *Cylinder Head Preparation and Assembly*—Assemble using intake and exhaust valves as prepared in 8.3. Refer to the manufacturer's specifications and procedures as specified in BMW 318i Service Manual for any additional information not provided in this test method. All parts for the reassembly shall be cleaned in accordance with the procedures outlined in 8.2 and 8.3. This section assumes the necessary parts have been cleaned and the cylinder head is mounted in the head stand.

8.4.1 *Measure Stem-to-Guide Clearance*—The intake and exhaust valve stem-to-guide clearances shall be determined.

8.4.1.1 Measure intake and exhaust valve guides using an appropriate gage (see 6.5.7) to take two measurements 90° apart at positions 2 mm (0.08 in.) from the top and bottom of the valve guides. These four measurements shall be taken to the nearest 0.025 mm (0.001 in.). Record on the form as shown in Fig. 4 and repeat for all cylinders.

8.4.1.2 Measure intake and exhaust valve stems using an appropriate gage (see 8.4.4) to take two measurements 90° apart at positions 2 mm from the top and bottom on the valve stems as shown in Fig. 5. These four measurements shall be taken to the nearest 0.025 mm (0.001 in.). Record on the form as shown in Fig. 4 and repeat for all cylinders.

8.4.2 *Calculate Stem-to-Guide Clearance*—Measurements taken in 8.4.1.1 and will be sufficient to check the taper and out-of-round of the guide. Calculation of stem-to-guide clearance is defined as the maximum guide diameter minus the minimum stem diameter. This calculation shall be executed for each valve and recorded as shown on the data sheet in Fig. 4.

8.4.2.1 With all of the measurements recorded, each valve stem clearance is determined as follows:

$$\text{clearance} = \text{maximum guide diameter} - \text{minimum stem diameter} \quad (1)$$

8.4.2.2 *Specification*—Clearance for all valves shall be less than 0.15 mm (0.006 in.). Refer to BMW 318i Service Manual for minimum clearance.

8.4.2.3 If the maximum specification for clearance is not met for either intake or exhaust valves, the cylinder head shall not be used. Replacement of valve guides or refurbishing (that is, knurling and honing) is not permitted as any oil control change or heat transfer change may alter the deposit accumulation. If it is determined that a new head is required, a new head shall be obtained from BMW NA (see Annex A2).

8.4.3 *New Head Procedure*—If a new cylinder head is required, the cylinder head supplied will be unassembled. Thoroughly rinse the new cylinder head with a solvent (see 7.5). Be sure to rinse all oil and coolant passages. Assemble the cylinder head in accordance with the procedures outlined in this section.

8.4.4 *Measurement of Valve Seat Quality*—Measure all valve and corresponding valve seats using a dye removal method.

8.4.4.1 Cover the seating surface of the intake valve with a thin film of dye, such as Prussian blue dye, and place it back into the corresponding guide. Rotate the valve by the stem not more than ¼ revolution (±⅛ revolution) while gently pulling it towards the seat. This rotation will rub dye off the valve face at the seating surface. Measure the maximum and minimum width of the etched circle on the valve face using a vernier caliper and record on the appropriate form (see Fig. 4).

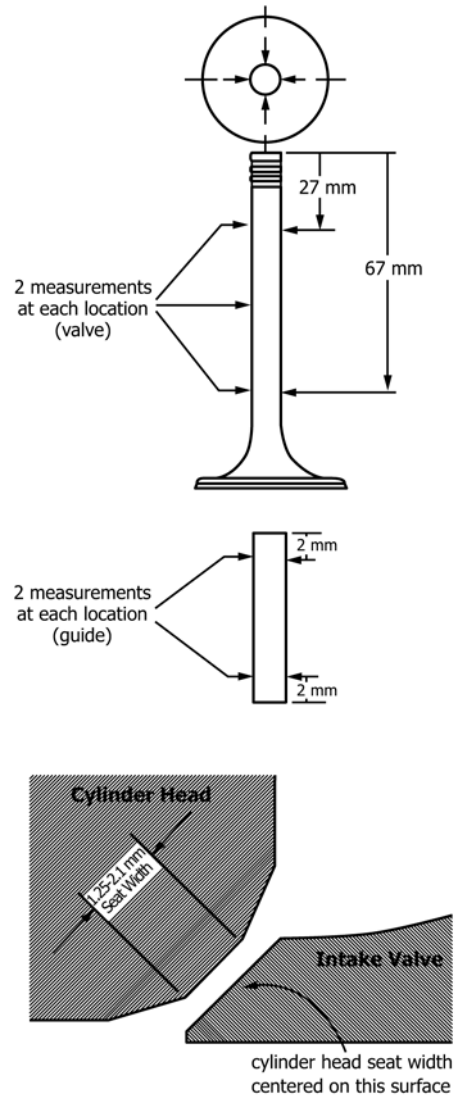

Proper Intake Valve Seat Orientation

FIG. 5 Location of Stem and Guide Measurements

8.4.4.2 The valve seat widths shall be between 1.25 mm and 2.1 mm (0.051 in. and 0.089 in.). The cylinder head seat shall contact the valve in the center of the machined valve face surface as shown in Fig. 5.

8.4.4.3 The cylinder head valve seat or valve, or both, shall be adjusted to meet these requirements or the part shall be discarded. The cylinder head valve seat and valve shall be cut as outlined in the BMW 318i Service Manual with the appropriate equipment (see 6.5.12).

8.4.4.4 Remove the cylinder head from the head stand and place it on a bench with the combustion chamber side up.

8.4.5 *Lap Valves*—Lap the valve in the proper cylinder as identified on the stem. Lap the valve until the seating surface is uniform.

8.4.5.1 Lightly coat the valve seat surface being lapped with lapping compound (7.8). Using a valve lapping tool (see 6.5.11), lap the valve until the seating surface is uniform. Do not lap the valves more than is necessary for obtaining a

AVA Documents
Document Sharing Hub

Full document details: ASTM D5500-20a