NOTICE: This standard has either been superseded and replaced by a new version or withdrawn.
Contact ASTM International (www.astm.org) for the latest information.

Designation: D5650 – 97 (Reapproved 2007)

An American National Standard

# Standard Test Method for Resistance to Bending of Paper of Low Bending Stiffness (Taber-Type Tester in 0 to 10 Taber Stiffness Unit Configuration)[1]

This standard is issued under the fixed designation D5650; the number immediately following the designation indicates the year of original adoption or, in the case of revision, the year of last revision. A number in parentheses indicates the year of last reapproval. A superscript epsilon (ε) indicates an editorial change since the last revision or reapproval.

## 1. Scope

1.1 This test method covers a procedure used to measure the resistance to bending of papers which are of low grammage or high flexibility, or both, and which exhibit bending stiffness in the range from 0 to 10 Taber stiffness units.

1.2 The bending moment required to deflect the free end of a 38-mm (1.5-in.) wide vertically clamped specimen 15° from its center line when the load is applied 10 mm (0.39 in.) away from the clamp is determined. The resistance to bending is calculated from the bending moment.

1.3 The instrument used in this test method is identical to that described in Test Method D5342, used in the modified configuration described in Section 9.

1.4 Test results obtained using the Taber-Type tester as described in this test method have been reported to be as much as 40 % different from those obtained using Test Method D5342, and this test method shall not be used where Test Method D5342 is specified.

1.5 *This standard does not purport to address all of the safety concerns, if any, associated with its use. It is the responsibility of the user of this standard to establish appropriate safety and health practices and determine the applicability of regulatory limitations prior to use.*

## 2. Referenced Documents

2.1 *ASTM Standards:*[2]

D585 Practice for Sampling and Accepting a Single Lot of Paper, Paperboard, Fiberboard, and Related Product

D685 Practice for Conditioning Paper and Paper Products for Testing

D1968 Terminology Relating to Paper and Paper Products

D5342 Test Method for Resistance to Bending of Paper and Paperboard (Taber-Type Tester in Basic Configuration)

E122 Practice for Calculating Sample Size to Estimate, With Specified Precision, the Average for a Characteristic of a Lot or Process

## 3. Terminology

3.1 *Definitions*—Definitions shall be in accordance with Terminology D1968 and the *Dictionary of Paper*.[3]

## 4. Summary of Test Method

4.1 A test specimen of defined dimensions is bent through a specified angle using a specific testing instrument. The resulting bending moment is read from the instrument scale.

4.2 The resistance to bending can be calculated from the bending moment.

## 5. Significance and Use

5.1 Bending resistance of paper relates to a number of end use applications including wrapping, printing, copy machine performance, high speed mechanical handling of documents, and other applications.

## 6. Apparatus

6.1 *Description*:

6.1.1 The basic instrument that has been used for the test described in this test method for nearly fifty years is a manually operated (crank-driven) instrument. Over the years, various improvements in the basic instrument have been made for improved ease of use or greater reproducibility of data, or both. These improvements include replacement of the manual (crank) drive system with a constant speed motor, addition of automatic data determination, and automated instrument (motor sequencing) operation. Fig. 1 shows the motor-driven version of the instrument (see 6.1.2). It is the motor-driven model of the basic instrument that is the basis for this test method. However, any of the instrument variations described in this section, when properly calibrated and operated, should yield the same result. The components of the basic instrument can be seen in Fig. 1 as follows:

[1] This test method is under the jurisdiction of ASTM Committee D06 on Paper and Paper Products and is the direct responsibility of Subcommittee D06.92 on Standard Documents Relating to Paper and Paper Products.

Current edition approved Dec. 1, 2007. Published December 2007. Originally approved in 1995. Last previous edition approved in 2002 as D5650 – 97 (2002). DOI: 10.1520/D5650-97R07.

[2] For referenced ASTM standards, visit the ASTM website, www.astm.org, or contact ASTM Customer Service at service@astm.org. For *Annual Book of ASTM Standards* volume information, refer to the standard's Document Summary page on the ASTM website.

[3] Available from Technical Association of the Pulp and Paper Industry (TAPPI), 15 Technology Parkway South, Norcross, GA 30092, http://www.tappi.org.

Copyright © ASTM International, 100 Barr Harbor Drive, PO Box C700, West Conshohocken, PA 19428-2959, United States.



Documents
Document Sharing Hub

Full document details: ASTM D5650-97(2007)

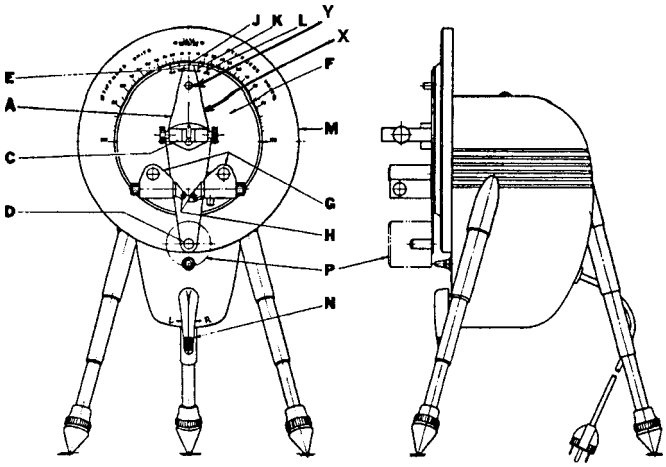


FIG. 1 Stiffness Instrument

6.1.1.1 A pendulum (A) supported in antifriction in bearings, carrying a vise (C) that has two clamping screws for holding and centering the test specimen, the lower edge of the vise coinciding with the center of the pendulum bearing. The pendulum is balanced, and at its lower end is a stud (D) to which weights may be attached and that loads the pendulum at a distance of 100 ± 0.025 mm (3.94 in.) from its center; without added weights the loading is 10 ± 0.001 g. A line (E) coinciding with the center line of the vise jaws and the weight stud (D), is engraved at the upper end of the pendulum.

6.1.1.2 A vertical disk (F), driven on the same axis as the pendulum by a driving mechanism, carries two driving arm attachments (G) so located as to provide the specimen with a cantilevered loading length of 50 ± 0.025 mm (1.97 in.) when it is deflected 15°. Fig. 1 does not show the crankdriving mechanism. The driving arms have rollers (H) that are adjustable to accommodate specimens of different thicknesses. On the periphery of the upper part of the disk is a marked line (J) coinciding with the center line between the driving rollers (H) and the axis, and two reference lines (K and L) are engraved on the periphery of the disk at angular distances of 7.5° and 15° on both sides of the center mark (J).

6.1.1.3 Located around the periphery of the disk (F) is a fixed annular disk (M) with a load scale from 0 to 100 on both sides of a zero point that is adjusted to coincide with the center line mark (J), the scale indicating the bending moment required to flex the specimen to the right or to the left, the divisions being in accordance with the sine of the angle through which the pendulum and weight are turned.

6.1.1.4 Various loading weights (P) for the pendulum, to give a maximum bending moment of 5000 g·cm (490 mN·m).

6.1.1.5 A10 Unit compensating weight (X) to be mounted on the stud (Y) near the top of the pendulum when the instrument is used as described in this test method.

6.1.2 For operator convenience and improved testing reproducibility, the "driving mechanism" (crank) of the basic unit was replaced by a motor to drive the vertical disk (F) at a constant rate of 210 ± 20° per minute. Other than this change, the motor-driven instrument has the components of the "basic instrument" in accordance with 6.1.1. The motor is reversible using the switch (N), that preferably also operates an electric brake to stop the disk at any point on the scale. The motor-driven version of the instrument shown in Fig. 1 is the instrument in most wide use today, and is the basis of this test method.

6.1.3 More recently, automated versions of the basic instrument have become available. These are two types: automatic reading of results (only), and automation of instrument operation as well as reading of results.

6.1.3.1 Devices are available that may be retrofitted to the basic instrument for automatically determining and recording the scale readings (see 10.2 ). Results are displayed on a digital readout device. In addition, the retrofitted unit may provide a signal output suitable for transmission to a stand-alone printer or an integrated acquisition system.

6.1.3.2 Totally automated versions of the basic motor-driven instrument (see 6.1.2), incorporating the components described in 6.1.2.1, and in addition automatically controlling the entire sequence of operations described in 10.2, are also available.

## 7. Sampling

7.1 *Acceptance Sampling*—Acceptance sampling shall be done in accordance with Practice D585.

7.2 *Sampling for Other Purposes*—The sampling and the number of test specimens depends upon the purpose of the testing. Practice E122 is recommended.

7.3 In sampling, take care not to bend, roll, score, or otherwise damage the area to be tested.

## 8. Test Specimens

8.1 From each test unit, cut ten square test specimens 38.1 ± 0.3 mm (1.50 ± 0.01 in.) in each dimension. At the very edge of each test specimen, mark or in some other way identify the machine direction of each square specimen, being careful not to damage the specimens in any way. All cut specimens must be free from scores or blemishes. A special cutter for cutting the samples may be available from the vendor, or a high-precision cutting board may be used.

## 9. Preparation of Apparatus

9.1 Place the instrument on a firm, level surface. A standard laboratory bench is generally quite satisfactory and should be checked with a carpenter's level to verify that it is level (front-to-back, side-to-side) when the instrument is initially installed. Set the loading disk (F) at zero and place a chosen weight (P) on the pendulum stud. If possible, choose a weight such that the resulting readings for the specimen to be tested are near the center of the measured test range. Close the two jaws of the vice (C) to meet on the center line of the pendulum and adjust the legs of the instrument so that the engraved mark (E) coincides with zero on the scale of M. Level the instrument front to back as well as side to side.

9.2 Displace the pendulum 15° and release it to check the bearing friction. It should make at least 20 complete swings before coming to rest. If it does not, check for obvious contamination by dust particles. In the absence of any obvious problem, contact the vendor to arrange service or maintenance.

9.3 If the instrument has a brake, check that it functions properly. It should "freeze" (stop and securely hold) the

AVA Documents
Document Sharing Hub



Full document details: ASTM D5650-97(2007)