This international standard was developed in accordance with internationally recognized principles on standardization established in the Decision on Principles for the Development of International Standards, Guides and Recommendations issued by the World Trade Organization Technical Barriers to Trade (TBT) Committee.

Designation: D5898/D5898M – 96 (Reapproved 2021)

Standard Guide for Standard Details for Adhered Sheet Waterproofing[1]

This standard is issued under the fixed designation D5898/D5898M; the number immediately following the designation indicates the year of original adoption or, in the case of revision, the year of last revision. A number in parentheses indicates the year of last reapproval. A superscript epsilon (ε) indicates an editorial change since the last revision or reapproval.

1. Scope

1.1 This guide covers details for typical conditions encountered in adhered sheet waterproofing on below-grade structures and plazas.

1.2 This guide does not cover liquid-applied waterproofing.

1.3 The values stated in either SI units or inch-pound units are to be regarded separately as standard. The values stated in each system may not be exact equivalents; therefore, each system shall be used independently of the other. Combining values from the two systems may result in nonconformance with the standard.

1.4 *This international standard was developed in accordance with internationally recognized principles on standardization established in the Decision on Principles for the Development of International Standards, Guides and Recommendations issued by the World Trade Organization Technical Barriers to Trade (TBT) Committee.*

2. Referenced Documents

2.1 *ASTM Standards:*[2]

D1079 Terminology Relating to Roofing and Waterproofing

3. Terminology

3.1 *Definitions*—For definitions of terms used in this guide, refer to Terminology D1079.

3.2 *Definitions of Terms Specific to This Standard:*

3.2.1 *adhered sheet waterproofing, n*—a system consisting of one or more plies of organic or glass fiber felts or fabrics applied in hot or cold bitumens or modified bitumens, or one or more plies of a manufactured sheet of modified bitumen that may be reinforced or laminated with scrim or polyethylene, or a polymeric or vulcanized elastomeric membrane. The system is applied directly to concrete or masonry surfaces below grade.

3.2.2 *elevated slab, n*—a framed or suspended concrete slab over a habitable or useable space.

3.2.3 *fillet, n*—liquid-applied modified bitumen or mastic used at internal corners before membrane application to form a transition of less than 90°.

3.2.4 *reinforcement, n*—generally, one or more strips of membrane, felts, or fabrics, installed at corners and over construction joints.

3.3 *Abbreviations:*

3.3.1 *LAM*—liquid-applied membrane.

3.3.2 *SS*—stainless steel.

3.3.3 *EJ*—expansion joint.

3.3.4 *NR*—not recommended.

3.3.5 *MTL*—noncorrosive metal.

4. Significance and Use

4.1 This guide illustrates general details for below-grade and plaza waterproofing. It serves as a guide that will enable the designer to prepare complete waterproofing details for each specific condition that occurs on a project.

5. Drawings

5.1 This guide is not all inclusive. The designer should detail all typical and special conditions on the project, paying particular attention to transitions in plane and intersection of different details. The applicator should provide shop drawings of each condition to confirm field conditions and to verify his understanding of the design intent.

5.2 Waterproofing membranes and reinforcement are indicated on the figures as a single thick line, regardless of the number of plies.

5.3 Protection layers have been omitted for clarity. See Section 6.

6. Protection

6.1 Protection materials are required over all waterproofing to prevent damage from backfill, reinforcing chairs, and construction traffic, unless the membrane system incorporates

[1] This guide is under the jurisdiction of ASTM Committee D08 on Roofing and Waterproofing and is the direct responsibility of Subcommittee D08.22 on Waterproofing and Dampproofing Systems.

Current edition approved Dec. 1, 2021. Published December 2021. Originally approved in 1996. Last previous edition approved in 2013 as D5898 – 96 (2013). DOI: 10.1520/D5898_D5898M-96R21.

[2] For referenced ASTM standards, visit the ASTM website, www.astm.org, or contact ASTM Customer Service at service@astm.org. For *Annual Book of ASTM Standards* volume information, refer to the standard's Document Summary page on the ASTM website.

Copyright © ASTM International, 100 Barr Harbor Drive, PO Box C700, West Conshohocken, PA 19428-2959. United States

Copyright by ASTM Int'l (all rights reserved); Wed Dec 08 07:44:07 GMT 2021
Downloaded/printed by
University of Toronto (University of Toronto) pursuant to License Agreement. No further reproductions authorized.
Full document details: ASTM D5898/D5898M-96(2021)

an integral protection layer. Protection also is required where membranes terminate above grade and may be exposed to ultraviolet light.

6.2 Materials for protection include: asphalt composition boards, plastic drainage panels, low-density expanded polystyrene boards, and extruded polystyrene insulation. Low-density expanded polystyrene boards and some types of plastic drainage panels are not suitable for protection on horizontal surfaces. Protection materials are loose-laid on horizontal membranes and attached to vertical membranes with compatible adhesives. They should be installed as soon as possible after the membrane, or each portion of it, is completed or water tested.

7. Reinforcement

7.1 Reinforcement is required for built-up and modified bitumen membranes at transitions, such as internal and external corners and at static concrete construction joints and cracks. Reinforcement also is required where reinforcing bars, pipes, and conduits penetrate the membrane. Separate reinforcement generally is not required for polymeric and vulcanized elastomeric membranes.

7.2 Reinforcement usually is installed before the membrane but may be applied over it. Refer to the membrane manufacturer for details.

7.3 The minimum reinforcement is one ply. Systems using a multiple-ply membrane usually require two or more reinforcement plies, whereas single-ply modified bitumen systems generally require one.

7.4 When additional plies are used as reinforcement, they should extend at least 150 mm [6 in.] beyond the corner or penetration and each succeeding ply should extend 75 mm [3 in.] beyond the previous ply.

7.5 Where reinforcing bars penetrate waterproofing, such as at rock anchors and wall-to-slab transitions, they should be sealed with reinforcing plies finger cut around the bars or liquid-applied membrane or both.

7.6 Some manufacturers require cementitious cants or a liquid-applied waterproofing or mastic fillet at reentrant angles, chamfered external corners, and other special conditions to be implemented during construction. These should be indicated on project details.

7.7 Details should recognize the normal sequencing of construction. Foundation walls may be cast before or after slabs on grade. Structural slabs are cast after walls. Waterproofing of individual elements frequently follows this sequence, for example, walls are waterproofed before the structural slab is cast. The resultant cold joints may be dynamic.

8. Penetrations

8.1 Flashing at penetrations should accommodate differential movement between the slab and the pipe, conduit, or drain. For built-up and modified bitumen membranes, lead reinforcing is recommended where pipes or drains are installed in sleeves but is optional where they are cast into the wall or slab. Cast iron drains, cast into the slab with flanges flush with or slightly below the slab, are preferred. Additional plies of reinforcement should be installed at drains.

8.2 Wearing courses on plaza decks move differentially from the structural slab. To prevent damage to the drainage system or flashing rupture from this movement, drains should be installed in the structural slab with inlets in the wearing course divorced from the drain body.

9. Expansion Joints

9.1 Structural expansion joints should be designed to permit independent movement of structural elements on each side of the joint. Control joints should be located to permit nonreversible movement and may be dynamic. The size and location of expansion and control joints should be determined by the structural engineer. Expansion joint covers should be designed to maintain continuity at all changes in plane. They should be designed to prevent displacement when subjected to water pressure. Where they occur in elevated slabs, they should be raised above the surface. Control joints are not detailed as expansion joints but should be reinforced in all membrane systems.

10. Structural Items

10.1 Water stops, keyways, and other structural elements that are frequently installed in construction and control joints are not indicated on the details.

11. Mud Mats

11.1 Mud mats are cast on the subgrade to support waterproofing. Protection boards and tamped sand beds may be acceptable alternates with some manufacturers.

12. Planters, Bench, and Equipment Supports

12.1 Waterproofing membranes on horizontal surfaces should be carried under planters and supports without interruption. Such items should be installed on the concrete protection slab. Waterproofing of planters should be independent of the slab waterproofing.

13. Explanatory Notes

13.1 Fig. 1—Standard details for adhered sheet waterproofing.

13.2 Fig. 2—This detail is applicable to tunnels and conditions where the width of excavations is limited. Alternately, the mud mat may be omitted and waterproofing applied to the top of a structural slab and turned down to the toe. Then, waterproofing is covered with a cementitious wearing course.

13.3 Fig. 3—Slab with mud mat.

13.4 Fig. 4—Footing with mud mat.

13.5 Fig. 5—This detail is applicable to conditions where there is no hydrostatic head below the slab.

13.6 Figs. 6-8—Where internal and external vertical corners meet horizontal surfaces, isometric drawings prepared by the designer or applicator are required to indicate the assembly of the overlapping plies.

AVA Documents
Document Sharing Hub

Copyright by ASTM Int'l (all rights reserved); Wed Dec 08 07:44:07 GMT 2021
Downloaded/printed by
University of Toronto (University of Toronto) pursuant to License Agreement. No further reproductions authorized.
Full document details: ASTM D5898/D5898M-96(2021)

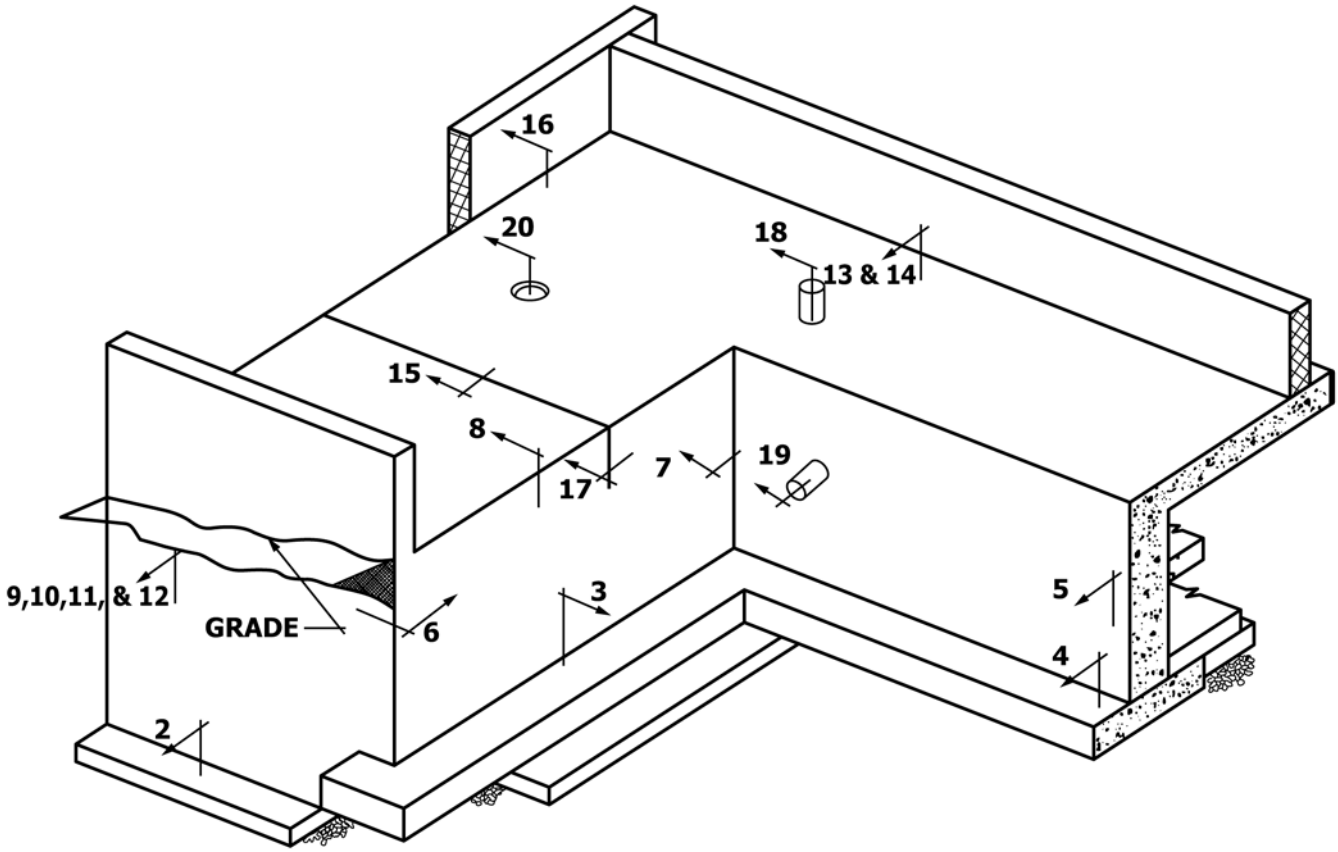

FIG. 1 Standard Details for Adhered Sheet Waterproofing

13.7 Figs. 9 and 10—Waterproofing should not be terminated below grade. Even when a reglet is used to terminate the sheet, or a cap flashing is installed in a reglet, water can migrate behind the sheet through cracks above the reglet. Because most of the adhered sheet waterproofing materials are subject to degradation by ultraviolet light or heat, it is recommended that foundation waterproofing be carried to a brick shelf or haunch below grade and terminated. This will permit it to be protected until cladding above is installed. Counterflashing should be carried at least 200 mm [8 in.] above grade behind a permanent cladding. Suitable cladding materials at or below grade include granite and similar low permeable stones, SW grade brick, precast concrete, cement plaster, and corrosion-resistant metal. The dotted line indicates that a dense, impervious protection board is required under the masonry.

13.8 Figs. 11 and 12—These details are applicable where foundation walls are extended 300 mm [12 in.] or more above grade. Waterproofing should be extended to a brick shelf where the top edge can be sealed and protected by cap flashing. The membrane is promptly covered with a protection layer. Finishes such as stucco, or insulation and stucco, are applied over the protection layer.

13.9 Figs. 13 and 14—These details are applicable to walls or parapets supported by the slab where the vertical element is supported on the slab and the joint is not dynamic. Horizontal waterproofing is elevated 37 mm [1.5 in.] above the slab on a cast-in-place cant, 100 mm [4 in.] wide. A compressible filler is required between wearing surface assemblies and the protection layer over the membrane. Protection board is required between the membrane and the metal flashing. It is recommended that the flashing terminate in a receiver to permit installation of the metal cap flashing after masonry is completed and to provide a suitable surface for the caulking. Fig. 14 depicts a method of concealing the base flashing.

13.10 Fig. 15—This detail is applicable to expansion joints in the elevated slab. The joint is raised as in Fig. 13. Expansion joint covers in the plane of the elevated slab should be avoided. A compressible closed-cell neoprene tube or proprietary formed member is used to permit the membrane to flex. A plastic, neoprene, butyl or polymer-modified bitumen hammock is installed to support the tubing, act as a bitumen stop, and as a vapor retarder. Although insulation reduces the heat loss, it may lower the temperature of the vapor retarder below the dewpoint temperature. The first ply over the tube should be an elastomeric material similar to the hammock and disbonded from the tube. One or more plies of elastomeric material then are applied extending over the slab. The alternate proprietary formed member does not require a hammock. While the elimination of the hammock reduces the redundancy of the joint cover, it does offer more convenient leak detectability. A gutter under the expansion joint is optional with the hammock system but strongly recommended without it.

AVA Documents
Document Sharing Hub

Copyright by ASTM Int'l (all rights reserved); Wed Dec 08 07:44:07 GMT 2021
Downloaded/printed by
University of Toronto (University of Toronto) pursuant to License Agreement. No further reproductions authorized.
Full document details: ASTM D5898/D5898M-96(2021)

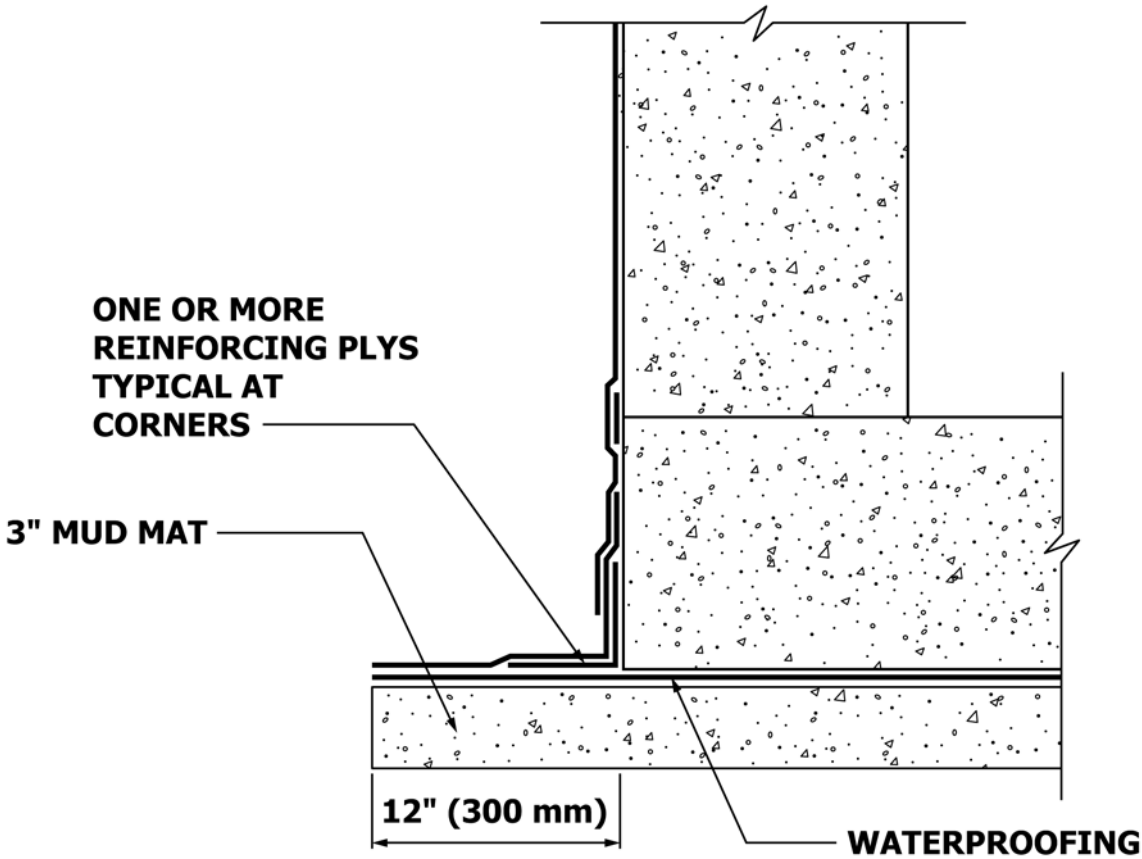

FIG. 2 Tunnel with Mud Mat

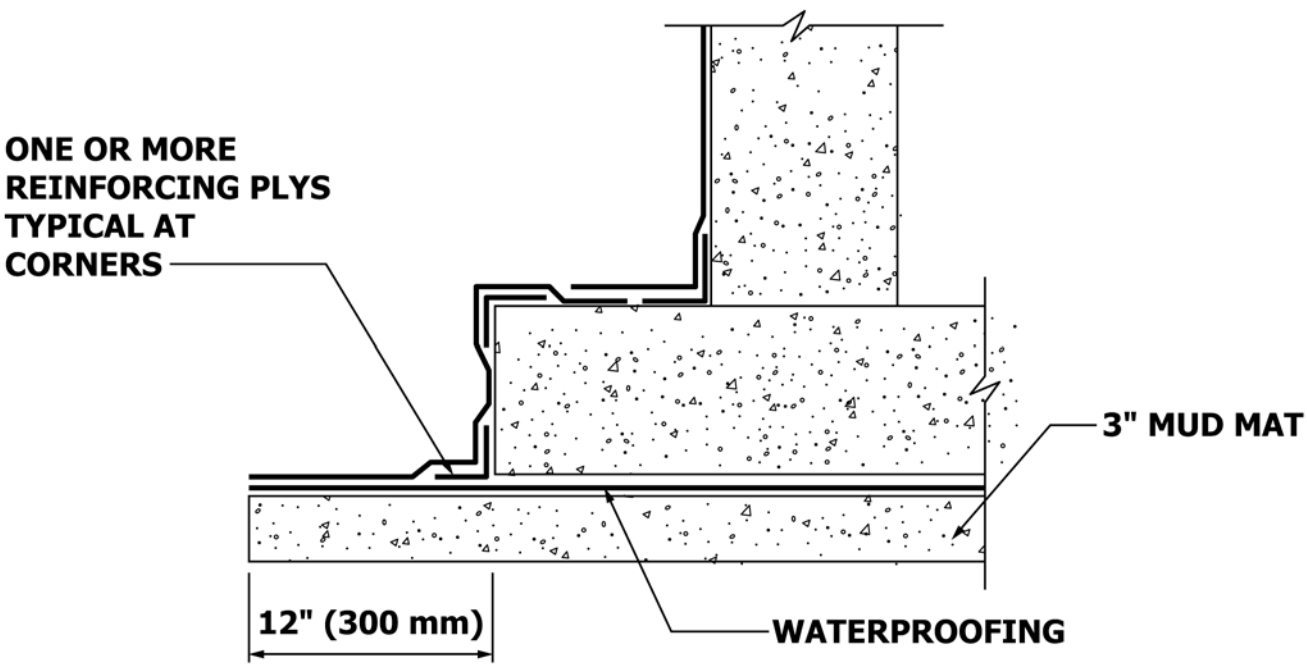

FIG. 3 Slab with Mud Mat

13.11 Fig. 16—This detail is applicable to walls or parapets that are not supported by the elevated slab, where the joint is dynamic. Comments in Paragraph 13.9 apply to Fig. 16.

13.12 Fig. 17—This detail is applicable to an expansion joint in a foundation wall.

Copyright by ASTM Int'l (all rights reserved); Wed Dec 08 07:44:07 GMT 2021
Downloaded/printed by
University of Toronto (University of Toronto) pursuant to License Agreement. No further reproductions authorized.
Full document details: ASTM D5898/D5898M-96(2021)

AVA Documents
Document Sharing Hub

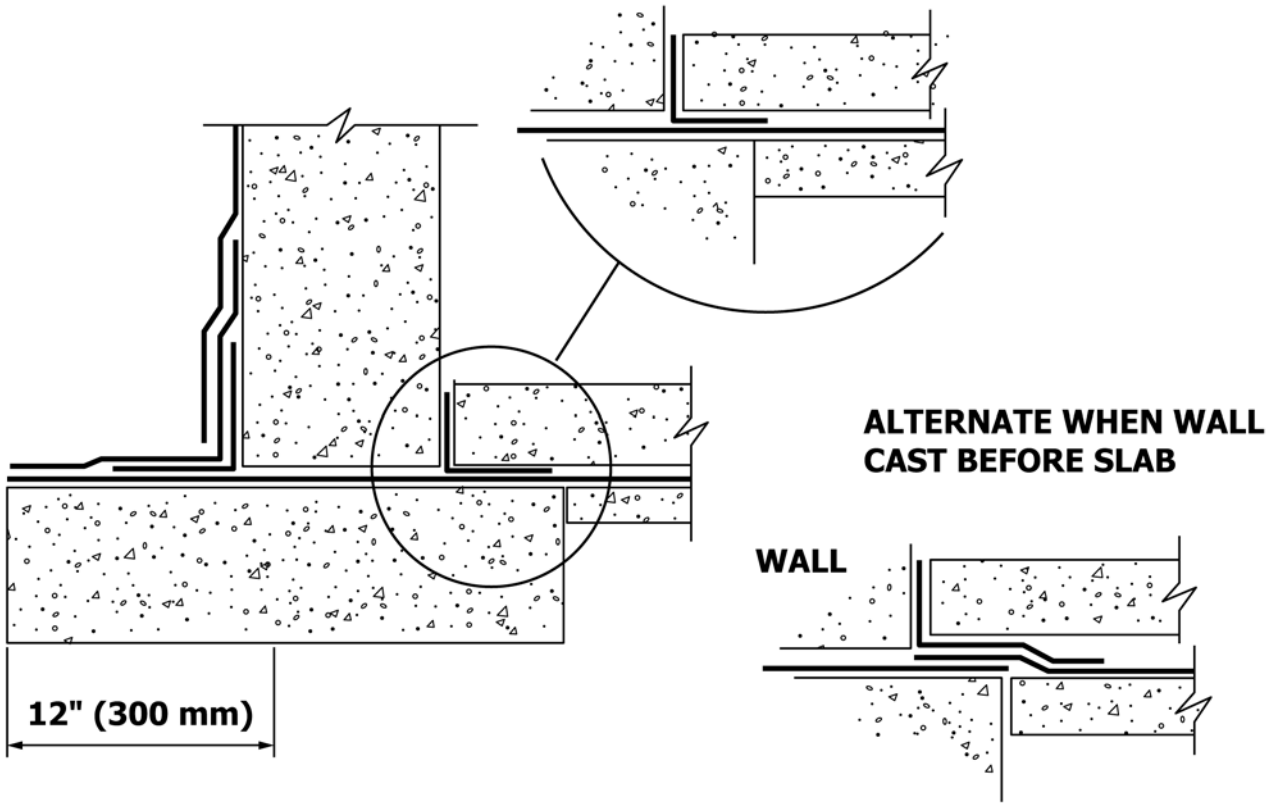

FIG. 4 Footing with Mud Mat

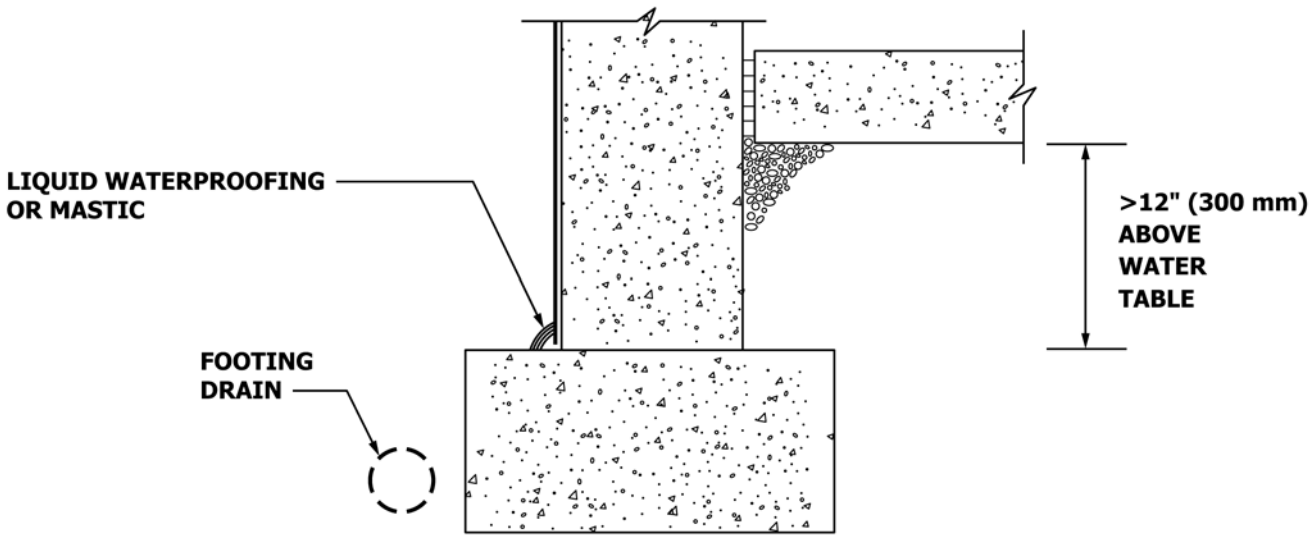

FIG. 5 Footing with Raised Slab

13.13 Fig. 18—Penetrations through horizontal waterproofed surfaces are usually conduits and water piping. Flashing should extend a minimum of 200 mm [8 in.] above grade.

Copyright by ASTM Int'l (all rights reserved); Wed Dec 08 07:44:07 GMT 2021
Downloaded/printed by
University of Toronto (University of Toronto) pursuant to License Agreement. No further reproductions authorized.
Full document detail: ASTM D5898/D5898M-96(2021)
Documents
Document Sharing Hub