This international standard was developed in accordance with internationally recognized principles on standardization established in the Decision on Principles for the Development of International Standards, Guides and Recommendations issued by the World Trade Organization Technical Barriers to Trade (TBT) Committee.

Designation: D5961/D5961M – 23

Standard Test Method for Bearing Response of Polymer Matrix Composite Laminates[1]

This standard is issued under the fixed designation D5961/D5961M; the number immediately following the designation indicates the year of original adoption or, in the case of revision, the year of last revision. A number in parentheses indicates the year of last reapproval. A superscript epsilon (ε) indicates an editorial change since the last revision or reapproval.

1. Scope

1.1 This test method covers the bearing response of pinned or fastened joints using multi-directional polymer matrix composite laminates reinforced by high-modulus fibers by double-shear tensile loading (Procedure A), single-shear tensile or compressive loading of a two-piece specimen (Procedure B), single-shear tensile loading of a one-piece specimen (Procedure C), or double-shear compressive loading (Procedure D). Standard specimen configurations using fixed values of test parameters are described for each procedure. However, when fully documented in the test report, a number of test parameters may be optionally varied. The composite material forms are limited to continuous-fiber or discontinuous-fiber (tape or fabric, or both) reinforced composites for which the laminate is balanced and symmetric with respect to the test direction. The range of acceptable test laminates and thicknesses are described in 8.2.1.

1.2 This test method is consistent with the recommendations of MIL-HDBK-17, which describes the desirable attributes of a bearing response test method.

1.3 The multi-fastener test configurations described in this test method are similar to those used by industry to investigate the bypass portion of the bearing bypass interaction response for bolted joints, where the specimen may produce either a bearing failure mode or a bypass failure mode. Note that the scope of this test method is limited to bearing and fastener failure modes. Use Test Method D7248/D7248M for by-pass testing.

1.4 The values stated in either SI units or inch-pound units are to be regarded separately as standard. The values stated in each system may not be exact equivalents; therefore, each system shall be used independently of the other. Combining values from the two systems may result in non-conformance with the standard.

1.4.1 Within the text the inch-pound units are shown in brackets.

1.5 *This standard does not purport to address all of the safety concerns, if any, associated with its use. It is the responsibility of the user of this standard to establish appropriate safety, health, and environmental practices and determine the applicability of regulatory limitations prior to use.*

1.6 *This international standard was developed in accordance with internationally recognized principles on standardization established in the Decision on Principles for the Development of International Standards, Guides and Recommendations issued by the World Trade Organization Technical Barriers to Trade (TBT) Committee.*

2. Referenced Documents

2.1 *ASTM Standards:*[2]

D792 Test Methods for Density and Specific Gravity (Relative Density) of Plastics by Displacement

D883 Terminology Relating to Plastics

D953 Test Method for Pin-Bearing Strength of Plastics

D2584 Test Method for Ignition Loss of Cured Reinforced Resins

D2734 Test Methods for Void Content of Reinforced Plastics

D3171 Test Methods for Constituent Content of Composite Materials

D3410/D3410M Test Method for Compressive Properties of Polymer Matrix Composite Materials with Unsupported Gage Section by Shear Loading

D3878 Terminology for Composite Materials

D5229/D5229M Test Method for Moisture Absorption Properties and Equilibrium Conditioning of Polymer Matrix Composite Materials

D5687/D5687M Guide for Preparation of Flat Composite Panels with Processing Guidelines for Specimen Preparation

D7248/D7248M Test Method for High Bearing - Low Bypass Interaction Response of Polymer Matrix Composite Laminates Using 2-Fastener Specimens

D8509 Guide for Test Method Selection and Test Specimen Design for Bolted Joint Related Properties

E4 Practices for Force Calibration and Verification of Testing Machines

[1] This test method is under the jurisdiction of ASTM Committee D30 on Composite Materials and is the direct responsibility of Subcommittee D30.05 on Structural Test Methods.

Current edition approved Sept. 1, 2023. Published September 2023. Originally approved in 1996. Last previous edition approved in 2017 as D5961/D5961M – 17. DOI: 10.1520/D5961_D5961M-23.

[2] For referenced ASTM standards, visit the ASTM website, www.astm.org, or contact ASTM Customer Service at service@astm.org. For *Annual Book of ASTM Standards* volume information, refer to the standard's Document Summary page on the ASTM website.

Copyright © ASTM International, 100 Barr Harbor Drive, PO Box C700, West Conshohocken, PA 19428-2959. United States

Documents
Document Sharing Hub
Full document details: ASTM D5961/D5961M-23

E6 Terminology Relating to Methods of Mechanical Testing
E83 Practice for Verification and Classification of Extensometer Systems
E122 Practice for Calculating Sample Size to Estimate, With Specified Precision, the Average for a Characteristic of a Lot or Process
E177 Practice for Use of the Terms Precision and Bias in ASTM Test Methods
E238 Test Method for Pin-Type Bearing Test of Metallic Materials
E456 Terminology Relating to Quality and Statistics
E691 Practice for Conducting an Interlaboratory Study to Determine the Precision of a Test Method

2.2 *Other Document:*
MIL-HDBK-17, *Polymer Matrix Composites*, Vol 1, Section 7[3]

3. Terminology

3.1 *Definitions*—Terminology D3878 defines terms relating to high-modulus fibers and their composites. Terminology D883 defines terms relating to plastics. Terminology E6 defines terms relating to mechanical testing. Terminology E456 and Practice E177 define terms relating to statistics. In the event of a conflict between terms, Terminology D3878 shall have precedence over the other documents.

NOTE 1—If the term represents a physical quantity, its analytical dimensions are stated immediately following the term (or letter symbol) in fundamental dimension form, using the following ASTM standard symbology for fundamental dimensions, shown within square brackets: [*M*] for mass, [*L*] for length, [*T*] for time, [*I*] for thermodynamic temperature, and [*nd*] for nondimensional quantities. Use of these symbols is restricted to analytical dimensions when used with square brackets, as the symbols may have other definitions when used without the brackets.

3.2 *Definitions of Terms Specific to This Standard*—Refer to Guide D8509.

3.3 *Symbols:*

A = minimum cross-sectional area of a specimen
CV = coefficient of variation statistic of a sample population for a given property (in percent)
d = fastener or pin diameter
D = specimen hole diameter
d_{csk} = countersink depth
d_{fl} = countersink flushness (depth or protrusion of the fastener in a countersunk hole)
e = distance, parallel to force, from hole center to end of specimen; the edge distance
E_x^{br} = bearing chord stiffness in the test direction specified by the subscript (for determination of offset bearing strength)
f = distance, parallel to force, from hole edge to end of specimen
F_x^{bru} = ultimate bearing strength in the test direction specified by the subscript
F_x^{bro} (e %) = offset bearing strength (at e % bearing strain offset) in the test direction specified by the subscript
g = distance, perpendicular to force, from hole edge to shortest edge of specimen
h = specimen thickness
k = calculation factor used in bearing equations to distinguish single-fastener tests from double-fastener tests
K = calculation factor used in bearing equations to distinguish hole deformation in one member of the assembly from hole deformation shared between two members of the assembly in a strain equation
L_g = extensometer gage length
n = number of specimens per sample population
P = force carried by test specimen
P^f = force carried by test specimen at failure
P^{max} = maximum force carried by test specimen prior to failure
s_{n-1} = standard deviation statistic of a sample population for a given property
w = specimen width
x_i = test result for an individual specimen from the sample population for a given property
$\bar{x}$ = mean or average (estimate of mean) of a sample population for a given property
δ = extensional displacement
ε = general symbol for strain, whether normal strain or shear strain
ε^{br} = bearing strain
σ^{br} = bearing stress

4. Summary of Test Method

4.1 *Procedure A, Double Shear, Tension:*

4.1.1 A flat, constant rectangular cross-section test specimen with a centerline hole located near the end of the specimen, as shown in the test specimen drawings of Figs. 1 and 2, is loaded at the hole in bearing. The bearing force is normally applied through a close-tolerance, lightly torqued fastener (or pin) that is reacted in double shear by a fixture similar to that shown in Fig. 3 and Fig. A1.1. The bearing force is created by loading the assembly in tension in a testing machine.

4.1.2 Refer to Guide D8509 for additional test details and for the standard test configuration.

4.2 *Procedure B, Single Shear, Two-Piece Specimen:*

4.2.1 The flat, constant rectangular cross-section test specimen is composed of two like halves fastened together through one or two centerline holes located near one end of each half, as shown in the test specimen drawings of Figs. 4-7. The eccentricity in applied force that would otherwise result is minimized by a doubler bonded to, or frictionally retained against each grip end of the specimen, resulting in a force line-of-action along the interface between the specimen halves, through the centerline of the hole(s).

4.2.1.1 *Unstabilized Configuration (No Support Fixture)*—The ends of the test specimen are gripped in the jaws of a test machine and loaded in tension.

4.2.1.2 *Stabilized Configuration (Using Support Fixture)*—The test specimen is face-supported in a multi-piece bolted support fixture, similar to that shown in Fig. 8. The test specimen/fixture assembly is clamped in hydraulic wedge grips and the force is sheared into the support fixture and then

[3] Available from Standardization Documents Order Desk, DODSSP, Bldg. 4, Section D, 700 Robbins Ave., Philadelphia, PA 19111-5098, http://dodssp.daps.dla.mil.

AVA Documents Document Sharing Hub

Full document details: ASTM D5961/D5961M-23

DRAWING NOTES:

1. INTERPRET DRAWING IN ACCORDANCE WITH ANSI Y14.5M-1982, SUBJECT TO THE FOLLOWING:
2. ALL DIMENSIONS IN MILLIMETRES WITH DECIMAL TOLERANCES AS FOLLOWS:

NO DECIMAL	.X	.XX
±1	±0.3	±0.1

3. ALL ANGLES HAVE TOLERANCE OF ± .5°.
4. PLY ORIENTATION DIRECTION TOLERANCE RELATIVE TO -A- IS RECOMMENDED TO BE WITHIN ± .5°. (See Section 6.1.)
5. FINISH ON MACHINED EDGES NOT TO EXCEED 1.6 (SYMBOLOGY IN ACCORDANCE WITH ASA B46.1, WITH ROUGHNESS HEIGHT IN MICROMETRES.)
6. VALUES TO BE PROVIDED FOR THE FOLLOWING, SUBJECT TO ANY RANGES SHOWN ON THE FIELD OF DRAWING: MATERIAL, LAY-UP, PLY ORIENTATION REFERENCE RELATIVE TO -A-, OVERALL LENGTH, HOLE DIAMETER, AND COUPON THICKNESS
7. FOR PROCEDURE D, REDUCE LENGTH, L, AS REQUIRED IN ORDER TO PREVENT BUCKLING

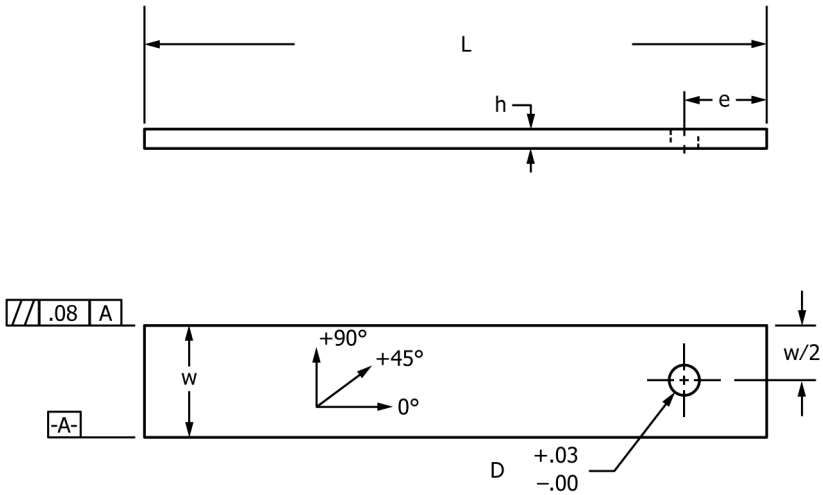

Parameter	Standard Dimension, mm
fastener or pin diameter, d	6 + 0.00/−0.03
hole diameter, D	6 + 0.03/−0.00
thickness range, h	2-4
length, L	135
width, w	36 ± 1
edge distance, e	18 ± 1
countersink	none

FIG. 1 Double-Shear and Single-Shear One-Piece Test Specimen Drawing (SI)

sheared into the specimen. The stabilized configuration is primarily intended for compressive loading, although the specimen/fixture assembly may be loaded in either tension or compression.

4.2.2 Refer to Guide D8509 for additional test details and for the standard test configuration.

4.3 *Procedure C, Single Shear, One-Piece Specimen:*

4.3.1 A flat, constant rectangular cross-section test specimen with a centerline hole located near the end of the specimen, as shown in the test specimen drawings of Figs. 1 and 2, is loaded at the hole in bearing. The bearing force is normally applied, by a fixture similar to that shown in Fig. A2.1, through a close-tolerance, lightly torqued fastener that is reacted in single shear, as shown in Fig. 9. The bearing force is created by loading the assembly in tension in a testing machine.

4.3.2 Refer to Guide D8509 for additional test details and for the standard test configuration.

4.4 *Procedure D, Double Shear, Compression:*

4.4.1 A flat, constant rectangular cross-section test specimen with a centerline hole located near the end of the specimen, as shown in the test specimen drawings of Figs. 1 and 2, is loaded at the hole in bearing. The bearing force is normally applied, by a fixture similar to that shown in Fig. A3.1, through a close-tolerance, lightly torqued fastener (or pin) that is reacted in double shear, as shown in Fig. 10. The bearing force is created by loading the assembly in compression in a testing machine.

4.4.2 Refer to Guide D8509 for additional test details and for the standard test configuration.

5. Significance and Use

5.1 Refer to Guide D8509.

6. Interferences

6.1 Refer to Guide D8509.

Documents
Document Sharing Hub

Full document details: ASTM D5961/D5961M-23

DRAWING NOTES:
1. INTERPRET DRAWING IN ACCORDANCE WITH ANSI Y14.5M-1982, SUBJECT TO THE FOLLOWING:
2. ALL DIMENSIONS IN INCHES WITH DECIMAL TOLERANCES AS FOLLOWS:

.X	.XX	.XXX
± .1	± .03	± .01

3. ALL ANGLES HAVE TOLERANCE OF ± .5°.
4. PLY ORIENTATION DIRECTION TOLERANCE RELATIVE TO -A- IS RECOMMENDED TO BE WITHIN ± .5°. (See Section 6.1.)
5. FINISH ON MACHINED EDGES NOT TO EXCEED 64√ (SYMBOLOGY IN ACCORDANCE WITH ASA B46.1, WITH ROUGHNESS HEIGHT IN MICROINCHES.)
6. VALUES TO BE PROVIDED FOR THE FOLLOWING, SUBJECT TO ANY RANGES SHOWN ON THE FIELD OF DRAWING: MATERIAL, LAY-UP, PLY ORIENTATION REFERENCE RELATIVE TO -A-, OVERALL LENGTH, HOLE DIAMETER, AND COUPON THICKNESS.
7. FOR PROCEDURE D, REDUCE LENGTH, L, AS REQUIRED IN ORDER TO PREVENT BUCKLING

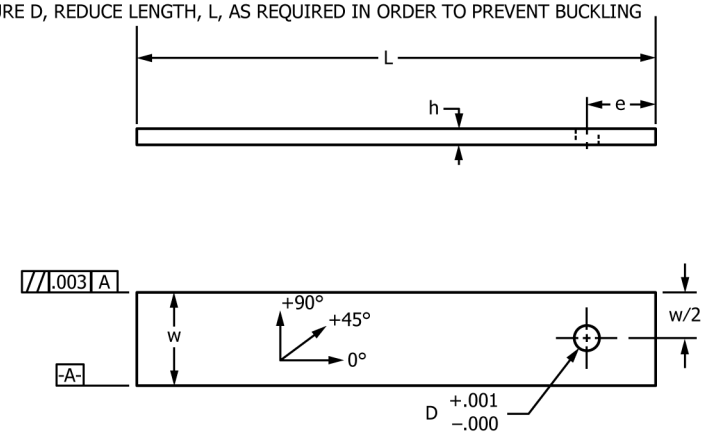

Parameter	Standard Dimension, in.
fastener or pin diameter, d	0.250 + 0.000/–0.001
hole diameter, D	0.250 + 0.001/–0.000
thickness range, h	0.08-0.17
length, L	5.5
width, w	1.5 ± 0.03
edge distance, e	0.75 ± 0.03
countersink	none

FIG. 2 Double-Shear and One-Piece Single-Shear Test Specimen Drawing (Inch-Pound)

7. Apparatus

7.1 *Micrometers*—The micrometer(s) shall use a 4 mm to 6 mm [0.16 in. to 0.25 in.] nominal diameter ball-interface on irregular surfaces such as the bag-side of a laminate, and a flat anvil interface on machined edges or very smooth tooled surfaces. The accuracy of the instrument(s) shall be suitable for reading to within 1 % of the sample width and thickness. For typical specimen geometries, an instrument with an accuracy of ±2.5 µm [±0.0001 in.] is desirable for thickness measurement, while an instrument with an accuracy of ±25 µm [±0.001 in.] is desirable for width measurement.

7.2 *Loading Fastener or Pin*—The fastener (or pin) type and, if applicable, nut type, shall be specified as initial test parameters and reported. Both fastener and nut shall be strong enough to preclude yielding at maximum applied force, unless fastener type is a test parameter (in which case expected fastener yield force shall be reported). The assembly torque (if applicable) shall be specified as an initial test parameter and reported. This value may be a measured torque or a specification torque for fasteners with lock-setting features. A measured torque, run-on torque and clamp-up torque shall be separately specified if run-on torque is expected to be more than 10 % of clamp-up torque. If washers are utilized, the washer type, number of washers, and washer location(s) shall be specified as initial test parameters and reported. The reuse of fasteners is not recommended due to potential differences in through-thickness clamp-up for a given torque level, caused by wear of the threads. If fasteners are reused, this shall be noted and reported.

7.3 *Overall Test Fixture and Instrumentation Assembly:*

7.3.1 *Procedure A*—The force shall be applied to the specimen by means of a double-shear clevis similar to that shown in Fig. 3 and Fig. A1.1, using a single loading fastener or pin. For torqued tests, the clevis shall allow a torqued fastener to apply a transverse compressive force to the specimen only around the periphery of the hole, to an extent of 2D (twice the hole diameter). While flat loading plates may be used in lieu of the bossed configuration shown in Fig. 3 and Fig. A1.1, both the 2D contact surface feature (e.g., inner and outer diameters) and pin bending distirbution (e.g., boss height) must be maintained through use of a suitable washer. The fixture shall allow a bearing strain indicator to monitor the hole deformation relative to the fixture as shown in Fig. 11.

7.3.2 *Procedure B*—The force shall be applied to the one- or two-fastener two-piece specimen either by directly gripping in the test frame grips, or by means of an optional support fixture, as shown in Fig. 8. The line of action of the force shall be adjusted by specimen doublers to be coincident and parallel to the interface between the test specimen halves. Support fixture details are described in 7.4. The assembled two-piece test

AVA Documents
Document Sharing Hub

Full document details: ASTM D5961/D5961M-23

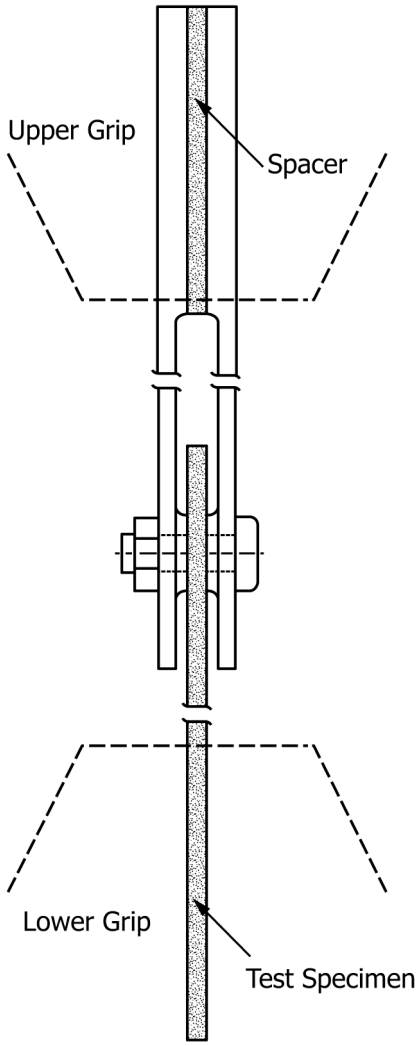

FIG. 3 Fixture Assembly for Procedure A

specimen and support fixture (if used) will allow a bearing strain indicator to measure the required hole deformation between specimen halves, as shown in Fig. 11.

7.3.3 *Procedure C*—The force shall be applied to the specimen by means of a single-shear fixture similar to that shown in Fig. 9 and Fig. A2.1, using a single loading fastener. The fixture shall allow a bearing strain indicator to monitor the hole deformation, as shown in Fig. 11.

7.3.4 *Procedure D*—The force shall be applied to the specimen by means of a double-shear clevis similar to that shown in Fig. 10 and Fig. A3.1, using a single loading fastener or pin. For torqued tests, the clevis shall allow a torqued fastener to apply a transverse compressive force to the specimen around the periphery of the hole. The fixture shall provide adequate column buckling stability such that essentially no loading eccentricity occurs. The fixture shall allow a bearing strain indicator to monitor the hole deformation, as shown in Fig. 11.

7.4 *Procedure B Support Fixture*—If compressive forces are applied, a support fixture shall be used to stabilize the specimen. The fixture is a face-supported test fixture as shown in Fig. 8. The fixture consists of two short-grip/long-grip assemblies, two support plates, and stainless steel shims as required to maintain a nominally zero (0.00 mm to 0.12 mm [0.000 in. to 0.005 in.] tolerance) gap between the support plates and the long grips. If this gap does not meet the minimum requirement, shim the contact area between the support plate and the short grip with brass, aluminum, or stainless steel shim stock. If the gap is too large, shim between the support plate and the long grip, holding the shim stock on the support plate with tape. Fig. 12 shows shim requirements. The fixture should be checked for conformity to engineering drawings. Each short-grip/long-grip assembly is line-drilled as shown in Fig. A4.1 and Fig. A5.1 and must be used as a matched set. The threading of the support plate is optional. Standard test specimens for single- and multiple-fastener configurations are 36 mm by 340 mm [1.5 in. by 13.5 in.] to allow testing of both configurations in the same support fixture. The fixture is hydraulically gripped on each end and the force is sheared by means of friction through the fixture and into the test specimen. A cutout exists on both faces of the fixture for a thermocouple, fastener(s) and surface-mounted extensometer, and the width of the long grip face is less than that of the test specimen to accommodate edge-mounted extensometry. The long and short fixtures have an undercut along the corner of the specimen grip area so that specimens are not required to be chamfered and to avoid damage caused by the radius. The fixtures also allow a slight clearance between the fixture and the gage section of the specimen, in order to minimize grip failures and friction effects.

7.4.1 *Procedure B Support Fixture Details*—The detailed drawings for manufacturing the support fixture are contained in Fig. A4.2, Fig. A5.2, Fig. A4.3, Fig. A5.3, Fig. A4.4, Fig. A5.4, Fig. A4.5, and Fig. A5.5. An optional threaded support plate is shown in Fig. A4.6 and Fig. A5.6, to be used instead of the support plate shown in Fig. A4.5 and Fig. A5.5 and the nuts called out in Fig. 8. Other fixtures that meet the requirements of this section may be used. The following general notes apply to these figures:

7.4.1.1 Machine surfaces to a 3.2 [125] finish unless otherwise specified.

7.4.1.2 Break all edges.

7.4.1.3 Specimen-gripping area shall be thermal sprayed with tungsten-carbide particles using high-velocity oxygen fueled (HVOF), electrospark deposition (ESD), or equivalent process.

7.4.1.4 The test fixture may be made of low-carbon steel for ambient temperature testing. For non-ambient environmental conditions, the recommended fixture material is a nonheat-treated ferritic or precipitation-hardened stainless steel (heat treatment for improved durability is acceptable but not required).

NOTE 2—Experience has shown that all of the fixtures described in 7.3 and 7.4 may be damaged in use, thus periodic re-inspection of the fixture dimensions and tolerances is important.

7.5 *Testing Machine*—The testing machine shall be in conformance with Practices E4, and shall satisfy the following requirements:

AVA Documents
Document Sharing Hub

Full document details: ASTM D5961/D5961M-23

DRAWING NOTES:
1. INTERPRET DRAWING IN ACCORDANCE WITH ANSI Y14.5M–1982, SUBJECT TO THE FOLLOWING:
2. ALL DIMENSIONS IN MILLIMETRES WITH DECIMAL TOLERANCES AS FOLLOWS:

NO DECIMAL	.X	.XX
±1	±0.3	±0.1

3. ALL ANGLES HAVE TOLERANCE OF +/– .5°.
4. PLY ORIENTATION DIRECTION TOLERANCE RELATIVE TO -A- WITHIN +/– .5°.
5. FINISH ON MACHINED EDGES NOT TO EXCEED 1.6 SYMBOLOGY IN ACCORDANCE WITH ASA B46.1, WITH ROUGHNESS HEIGHT IN MICROMETRES.)
6. VALUES TO BE PROVIDED FOR THE FOLLOWING, SUBJECT TO ANY RANGES SHOWN ON THE FIELD OF DRAWING; MATERIAL, LAY–UP, PLY ORIENTATION REFERENCE RELATIVE TO -A-, OVERALL LENGTH, HOLE DIAMETER, COUNTERSINK DETAILS, COUPON THICKNESS, DOUBLER MATERIAL, DOUBLER ADHESIVE.

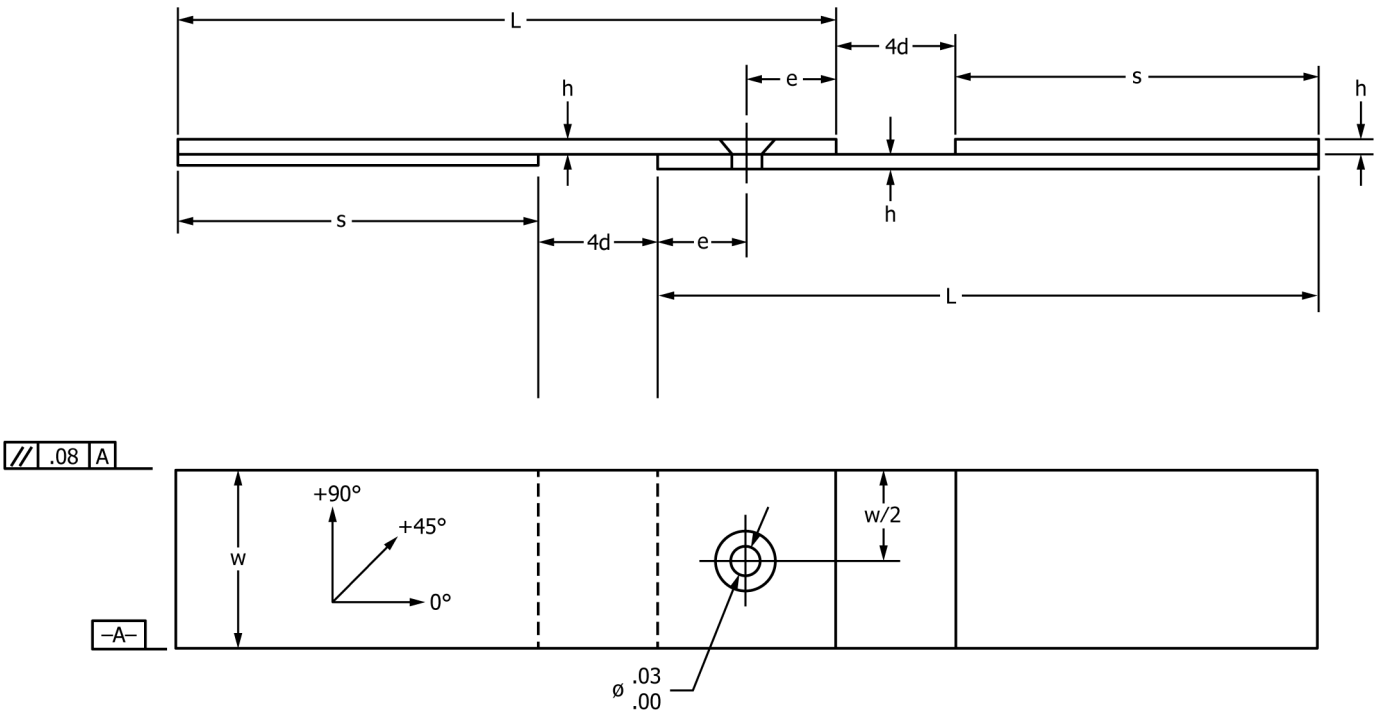

Parameters	Standard Dimensions of Specimen (mm)	
	without support fixture	with support fixture
fastener diameter, d	6+0.00/–0.03	6+0.00/–0.03
hole diameter, ø	6+0.03/–0.00	6+0.03/–0.00
thickness range, h	2-4	2-4
length, L	135	189
width, w	36 +/– 1	36 +/– 1
edge distance, e	18 +/– 1	18 +/– 1
countersink	none(optional)	none (optional)
doubler length, s	75	129

FIG. 4 Single-Shear, Two-Piece Single-Fastener Test Specimen Drawing (SI)

7.5.1 *Testing Machine Configuration*—The testing machine shall have both an essentially stationary head and a movable head. A short loading train and rigidly mounted hydraulic grips shall be used for Procedure B using the support fixture, Procedure C, and Procedure D.

7.5.2 *Drive Mechanism*—The testing machine drive mechanism shall be capable of imparting to the movable head a controlled velocity with respect to the stationary head. The velocity of the movable head shall be capable of being regulated as specified in 11.4.

AVA Documents
Document Sharing Hub

Full document details: ASTM D5961/D5961M-23

DRAWING NOTES:
1. INTERPRET DRAWING IN ACCORDANCE WITH ANSI Y14.5M–1982, SUBJECT TO THE FOLLOWING:
2. ALL DIMENSIONS IN INCHES WITH DECIMAL TOLERANCES AS FOLLOWS:

.X	.XX	.XXX
+/–.1	+/–.03	+/–.003

3. ALL ANGLES HAVE TOLERANCE OF +/– .5°.
4. PLY ORIENTATION DIRECTION TOLERANCE RELATIVE T O -A- WITHIN +/– .5°.
5. FINISH ON MACHINED EDGES NOT TO EXCEED 64 SYMBOLOGY IN ACCORDANCE WITH ASA B46.1, WITH ROUGHNESS HEIGHT IN MICROINCHES.)
6. VALUES TO BE PROVIDED FOR THE FOLLOWING, SUBJECT TO ANY RANGES SHOWN ON THE FIELD OF DRAWING; MATERIAL, LAY–UP, PLY ORIENTATION REFERENCE RELATIVE TO -A-, OVERALL LENGTH, HOLE DIAMETER, COUNTERSINK DETAILS, COUPON THICKNESS, DOUBLER MATERIAL, DOUBLER ADHESIVE.

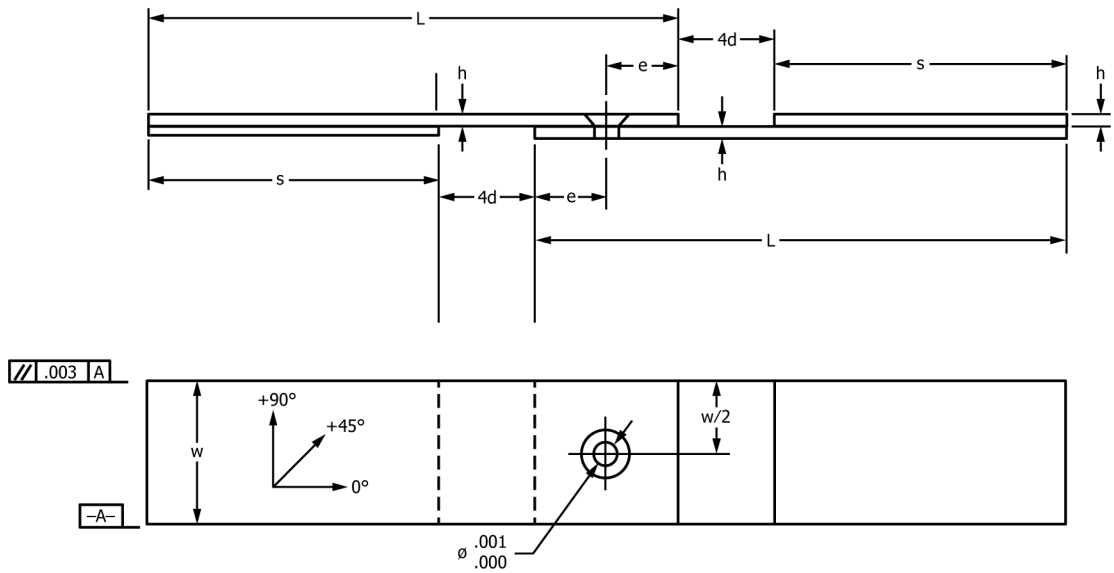

Parameters	Standard Dimensions of Specimen (inches)	
	without support fixture	with support fixture
fastener diameter, d	0.250 + 0.000/–0.001	0.250 + 0.000/–0.001
hole diameter, ø	0.250 + 0.001/–0.000	0.250 + 0.001/–0.000
thickness range, h	0.08–0.17	0.08–0.17
length, L	5.5	7.5
width, w	1.5 +/– 0.03	1.5 +/– 0.03
edge distance, e	0.75 +/– 0.03	0.75 +/– 0.03
countersink	none(optional)	none (optional)
doubler length, s	3.0	5.0

FIG. 5 Single-Shear Two-Piece Test Specimen Drawing (Inch-Pound)

7.5.3 *Force Indicator*—The testing machine force-sensing device shall be capable of indicating the total force being carried by the test specimen. This device shall be essentially free from inertia-lag at the specified rate of testing and shall indicate the force with an accuracy over the force range(s) of interest of within ±1 % of the indicated value.

7.5.4 *Grips*—Each head of the testing machine shall be capable of holding one end of the test assembly so that the direction of force applied to the specimen is coincident with the longitudinal axis of the specimen. Wedge grips shall apply sufficient lateral pressure to prevent slippage between the grip face and the test specimen or support fixture.

7.6 *Bearing Strain Indicator*—Bearing strain data shall be determined by one or two bearing strain indicators capable of measuring longitudinal hole deformation, as shown in Fig. 11. Note that face-mounted extensometry is not possible for Procedure B when the optional support fixture is used. Attachment of the bearing strain indicator(s) to the specimen shall not cause damage to the specimen surface. Transducers shall satisfy, at a minimum, Practice E83, Class B-2 requirements for the bearing strain/displacement range of interest, and shall be calibrated over that range in accordance with Practice E83. The transducers shall be essentially free of inertia lag at the specified speed of testing.

NOTE 3—While not shown in Fig. 11, a matched set of extensometers mounted on opposite faces would be required to quantify and correct for out-of-plane joint rotation in an unstabilized single-shear loading configuration.

AVA Documents
Document Sharing Hub

Full document details: ASTM D5961/D5961M-23

DRAWING NOTES:
1. INTERPRET DRAWING IN ACCORDANCE WITH ANSI Y14.5M–1982, SUBJECT TO THE FOLLOWING:
2. ALL DIMENSIONS IN MM WITH DECIMAL TOLERANCES AS FOLLOWS:

NO DECIMAL	.X	.XX X
±1	±0.3	±0.1

3. ALL ANGLES HAVE TOLERANCE OF +/– .5°.
4. PLY ORIENTATION DIRECTION TOLERANCE RELATIVE TO –A– WITHIN +/– .5°.
5. FINISH ON MACHINED EDGES NOT TO EXCEED 1.6 SYMBOLOGY IN ACCORDANCE WITH ASA B46.1, WITH ROUGHNESS HEIGHT IN MICROMETRES.)
6. VALUES TO BE PROVIDED FOR THE FOLLOWING, SUBJECT TO ANY RANGES SHOWN ON THE FIELD OF DRAWING; MATERIAL, LAY–UP, PLY ORIENTATION REFERENCE RELATIVE TO –A–, OVERALL LENGTH, HOLE DIAMETER, COUNTERSINK DETAILS, COUPON THICKNESS. DOUBLER MATERIAL, DOUBLER ADHESIVE.

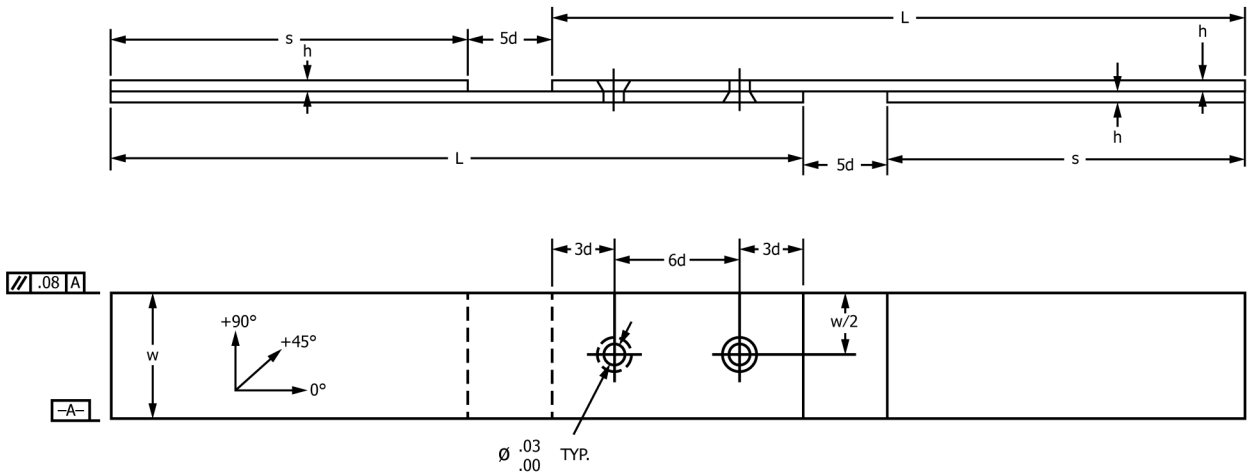

Parameters	Standard Dimensions of Specimen (mm) without support fixture	with support fixture
fastener diameter, d	6 + 0.00/–0.03	6 + 0.00/–0.03
hole diameter, Ø	6 + 0.03/–0.00	6 + 0.03/–0.00
thickness range, h	2-4	2-4
length, L	210	210
width, w	36 +/– 1	36 +/– 1
edge distance, e	18 +/– 1	18 +/– 1
countersink	none(optional)	none (optional)
doubler length, s	108	108

FIG. 6 Single-Shear, Two-Piece Double-Fastener Test Specimen Drawing (SI)

7.6.1 *Torque Wrench*—If using a torqued fastener, a torque wrench used to tighten a joint fastener shall be capable of determining the applied torque to within ±10 % of the desired value.

7.7 *Environmental Test Chamber*—An environmental test chamber is required for test environments other than ambient testing laboratory conditions. This chamber shall be capable of maintaining the gage section of the test specimen at the required test environment during the mechanical test.

8. Sampling and Test Specimens

8.1 *Sampling*—Test at least five specimens per test condition unless valid results can be gained through the use of fewer specimens, as in the case of a designed experiment. For statistically significant data the procedures outlined in Practice E122 should be consulted. The method of sampling shall be reported.

NOTE 4—If specimens are to undergo environmental conditioning to equilibrium, and are of such type or geometry that the weight change of the material cannot be properly measured by weighing the specimen itself (such as a tabbed mechanical specimen), then use a traveler specimen of the same nominal thickness and appropriate size (but without tabs) to determine when equilibrium has been reached for the specimens being conditioned.

8.2 *Test Specimen Geometry:*

8.2.1 *Stacking Sequence*—The standard laminate shall have multidirectional fiber orientations (fibers shall be oriented in a minimum of two directions), and balanced and symmetric stacking sequences. Nominal thickness shall be as close as possible to 4 mm [0.16 in.], with a permissible range from 2 mm to 4 mm [0.08 in. to 0.17 in.], inclusive, for a 6 mm [0.250 in.] diameter pin or fastener. Fabric laminates containing satin-type weaves shall have symmetric warp surfaces, unless otherwise specified and noted in the report.

NOTE 5—Typically, a $[45_i/0_j/\text{-}45_i/90_k]_{ms}$ tape or $[45_i/0_j]_{ms}$ fabric laminate should be selected such that a minimum of 5 % of the fibers lay in each of the four principal orientations. This laminate design has been found to yield the highest likelihood of acceptable failure modes.

8.2.2 *Configuration:*

AVA Documents
Document Sharing Hub

Full document details: ASTM D5961/D5961M-23

DRAWING NOTES:
1. INTERPRET DRAWING IN ACCORDANCE WITH ANSI Y14.5M–1982, SUBJECT TO THE FOLLOWING:
2. ALL DIMENSIONS IN INCHES WITH DECIMAL TOLERANCES AS FOLLOWS:

.X	.XX	.XXX
+/– .1	+/– .03	+/– .003

3. ALL ANGLES HAVE TOLERANCE OF +/– .5°.
4. PLY ORIENTATION DIRECTION TOLERANCE RELATIVE TO [–A–] WITHIN +/– .5°.
5. FINISH ON MACHINED EDGES NOT TO EXCEED 64 √ SYMBOLOGY IN ACCORDANCE WITH ASA B46.1, WITH ROUGHNESS HEIGHT IN MICROINCHES.)
6. VALUES TO BE PROVIDED FOR THE FOLLOWING, SUBJECT TO ANY RANGES SHOWN ON THE FIELD OF DRAWING; MATERIAL, LAY–UP, PLY ORIENTATION REFERENCE RELATIVE TO [–A–], OVERALL LENGTH, HOLE DIAMETER, COUNTERSINK DETAILS, COUPON THICKNESS, DOUBLER MATERIAL, DOUBLER ADHESIVE.

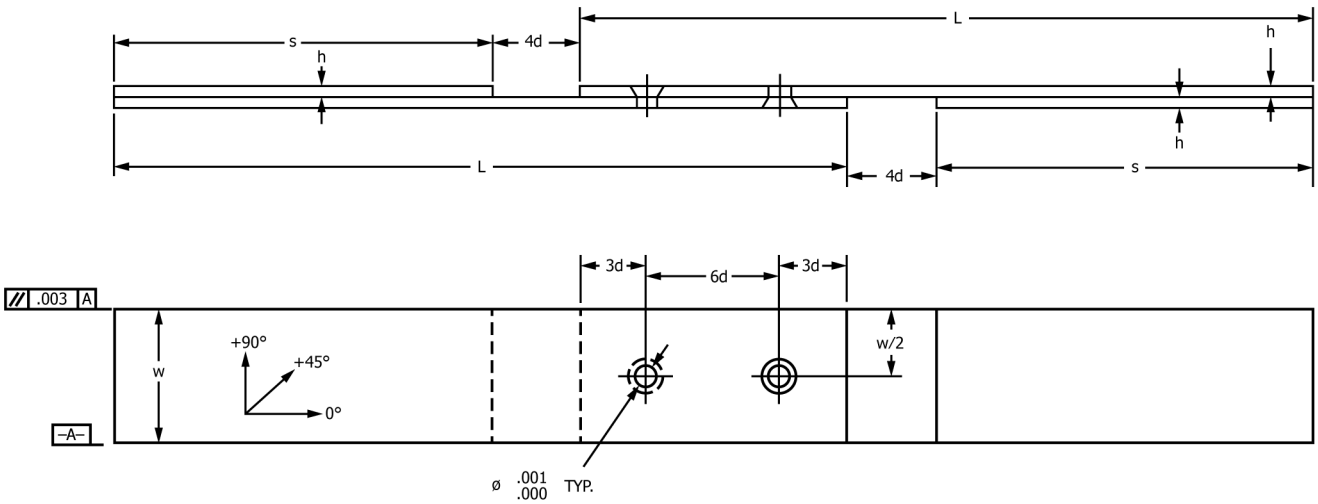

Parameters	Standard Dimensions of Specimen (inches) without support fixture	with support fixture
fastener diameter, d	0.250 + 0.000/–0.001	0.250 + 0.000/–0.001
hole diameter, ø	0.250 + 0.001/–0.000	0.250 + 0.001/–0.000
thickness range, h	0.08-0.17	0.08-0.17
length, L	8.25	8.25
width, w	1.5 +/– 0.03	1.5 +/– 0.03
edge distance, e	0.75 +/– 0.03	0.75 +/– 0.03
countersink	none(optional)	none (optional)
doubler length, s	4.25	4.25

FIG. 7 Single-Shear, Two-Piece Double Fastener Test Specimen Drawing (Inch-Pound)

8.2.2.1 *Procedures A, C, and D*—The geometry of the specimen for Procedures A, C, and D is shown in Figs. 1 and 2. For Procedure D, it is acceptable to reduce the overall specimen length as required to prevent buckling of the unsupported segment between the bearing fixture and the specimen grip. Maximum unsupported length may be estimated using Table 3 in Test Method D3410/D3410M, or similar buckling analysis methods.

8.2.2.2 *Procedure B*—The geometry of the specimen for Procedure B is shown in Figs. 4 and 5 for a single-fastener joint and Figs. 6 and 7 for a double-fastener joint. Note that the countersink(s) shown in the drawings is optional. For a double-fastener configuration, extend the length of each specimen half by the required distance and place a second bearing hole in line with the first, as shown in Figs. 6 and 7. If the double-fastener specimen is using countersunk fasteners, one countersink should be located on each side of the specimen, as shown. Note that if the support fixture is used for either the single- or double-fastener specimen configuration, the length of each specimen half and doubler must be adjusted as shown in Figs. 4-7 to accommodate loading with the fixture.

NOTE 6—When the double-fastener specimen is using countersunk fasteners, the countersink as shown is located on opposing faces of the specimen in order to provide an exact 50:50 force split between the two fasteners. This configuration has the potential to produce a net section failure mode at the first fastener (nearest the grips) rather than a pure bearing failure mode. As the scope of this test method is limited to bearing response, a net section failure mode at the first fastener location shall be clearly noted in the report and is cause for declaring the bearing test value invalid. If an alternate configuration, such as locating the countersink for both fasteners on the same face of the specimen, is desired to better represent an actual structural joint, the deviation shall be clearly noted in the test report.

AVA Documents
Document Sharing Hub

Full document details: ASTM D5961/D5961M-23

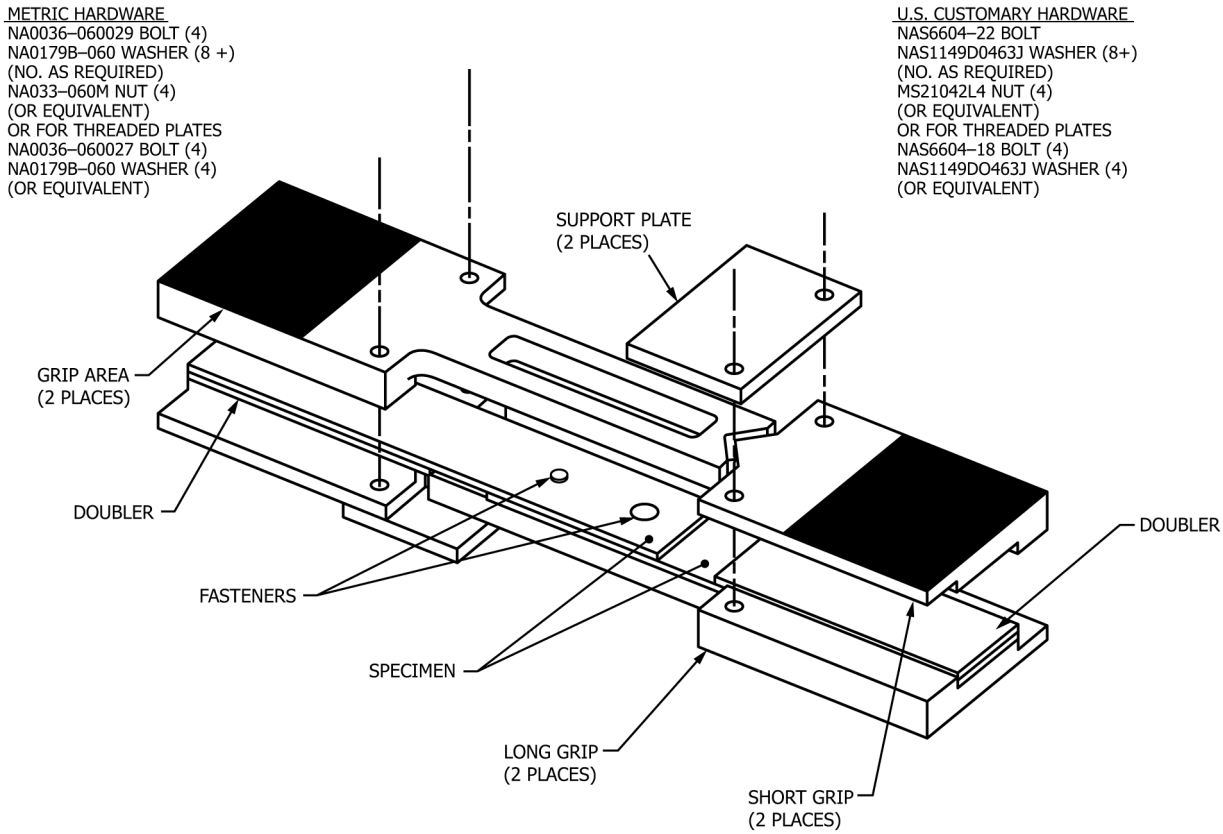

FIG. 8 Support Fixture Assembly for Procedure B

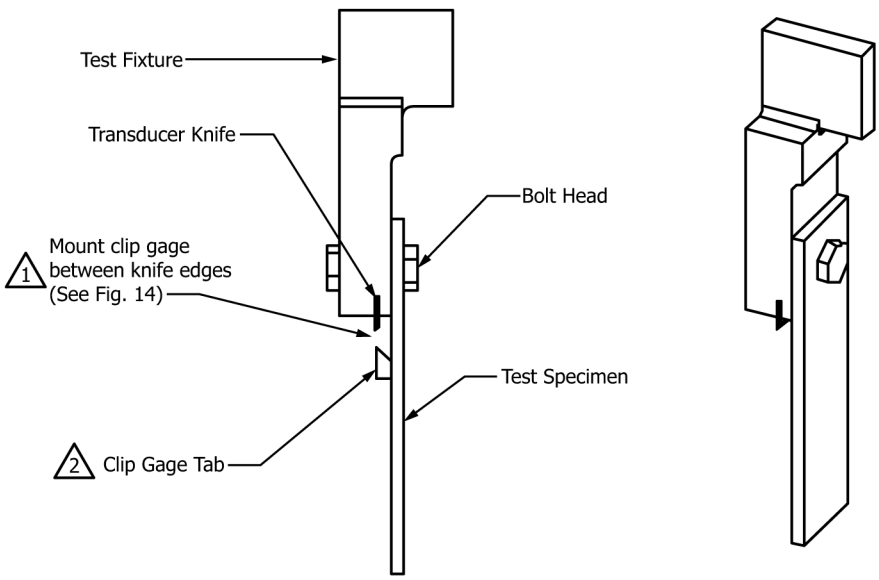

NOTES:
1. Knife blade tip and clip gage tab tip shall be co-planar ± Q (see Figure 10)
2. Manufacture clip gage tab from suitable material such that deformation or other damage to the tab is prevented. Clamp or bond (with suitable adhesive) clip gage tab to specimen as appropriate for clip gage and test environment, taking care not to damage specimen or interfere with load introduction.

FIG. 9 One-Piece Single-Shear Test Set-Up (Procedure C)

8.2.3 *Doubler Material*—The use of doublers made from the same laminate as the specimen being tested is recommended for all single-shear tests, as this ensures that the doublers are the same thickness as the laminate being tested, which is critical for proper loading of the single-shear test configuration.

AVA Documents
Document Sharing Hub

Full document details: ASTM D5961/D5961M-23