NOTICE: This standard has either been superseded and replaced by a new version or withdrawn.
Contact ASTM International (www.astm.org) for the latest information

Designation: D 5963 – 97a (Reapproved 2001)$^{\epsilon 1}$

Standard Test Method for Rubber Property—Abrasion Resistance (Rotary Drum Abrader)[1]

This standard is issued under the fixed designation D 5963; the number immediately following the designation indicates the year of original adoption or, in the case of revision, the year of last revision. A number in parentheses indicates the year of last reapproval. A superscript epsilon (ϵ) indicates an editorial change since the last revision or reapproval.

ϵ^1 NOTE—Footnotes 7, 8, 9, and 10 were editorially updated in October 2002.

1. Scope

1.1 This test method covers the measurement of abrasion resistance of rubbers (vulcanized thermoset rubbers and thermoplastic elastomers) that are subject to abrasive/frictional wear in actual service. The abrasion resistance is measured by moving a test piece across the surface of an abrasive sheet mounted to a revolving drum, and is expressed as volume loss in mm^3 or abrasion resistance index in percent. For volume loss, a smaller number indicates better abrasion resistance, while for the abrasion resistance index, a smaller number denotes poorer abrasion resistance.

1.2 Test results obtained by this test method shall not be assumed to represent the wear behavior of rubber products experienced in actual service.

1.3 The values stated in SI units are to be regarded as the standard. The values in parentheses are for information only.

1.4 *This standard does not purport to address all of the safety concerns, if any, associated with its use. It is the responsibility of the user of this standard to establish appropriate safety and health practices and determine the applicability of regulatory limitations prior to use.*

2. Referenced Documents

2.1 *ASTM Standards:*

D 297 Test Methods for Rubber Products—Chemical Analysis[2]

D 1765 Classification System for Carbon Blacks Used in Rubber Products[2]

D 2240 Test Method for Rubber Property—Durometer Hardness[2]

D 3182 Practice for Rubber—Materials, Equipment, and Procedures for Mixing Standard Compounds and Preparing Standard Vulcanized Sheets[2]

D 4483 Practice for Determining Precision for Test Method Standards in the Rubber and Carbon Black Industries[3]

2.2 *Other Standards:*

DIN 53516 Determination of Abrasion Resistance[4]

ISO 868 Plastics and Ebonite—Determination of Indentation Hardness by Means of a Durometer (Shore Hardness)[5]

ISO 2393 Rubber Test Mixes—Preparation, Mixing and Vulcanization—Equipment and Procedures[5]

ISO 2781 Rubber, Vulcanized—Determination of Density[5]

ISO 4649 Rubber—Determination of Abrasion Resistance Using a Rotating Cylindrical Drum Device[5]

ISO 5725 Precision of Test Methods—Determination of Repeatability and Reproducibility for a Standard Test Method by Interlaboratory Tests[5]

ISO 9298 Rubber Compounding Ingredients—Zone Oxide Test Methods[5]

3. Terminology

3.1 *abrasion loss, A,* (mm^3), *n*—the volume loss of a defined rubber test piece determined by sliding the test piece under specified conditions over the surface of an abrasive sheet of "nominal abrasiveness," S_O, mounted to a rotating drum of specified dimensions.[6]

3.1.1 *Discussion*—The designation A_A is used to indicate that the test was run in accordance with Method A.

3.2 *abrasion resistance index ARI (%)*, *n*—the ratio of the volume loss of a Standard Rubber to that of a test rubber expressed in percent, with the volume loss determined by

[1] This test method is under the jurisdiction of ASTM Committee D11 on Rubber and is the direct responsibility of Subcommittee D11.15 on Degradation Tests.

Current edition approved Nov. 10, 1997. Published May 1998.

This test method is an adaptation of ISO Standard 4649 (1985 revision), Rubber—Determination of Abrasion Resistance Using a Rotating Cylindrical Drum Device, and is being coordinated with a current draft revision of that standard (see Appendix X1).

[2] *Annual Book of ASTM Standards*, Vol 09.01.

[3] *Annual Book of ASTM Standards*, Vol 09.02.

[4] Available from DIN (Deutches Institut Fuer Normung), Burggrafenstrasse 6, 10787,Berlin, Germany.

[5] Available from American National Standards Institute, 25 W. 43rd St., 4th Floor, New York, NY 10036.

[6] This corresponds to the test method of DIN 53516 and to Method A (Relative volume loss) of ISO 4649:1985. The same calculation could be made for the other test methods if the proper value for the "nominal abrasiveness," S_0, for the test method were known or assumed. (150 mg has been indicated as a possible value for Method D but its accuracy has not been established to the degree of the Method A value.)

Copyright © ASTM International, 100 Barr Harbor Drive, PO Box C700, West Conshohocken, PA 19428-2959, United States.

Documents
Document Sharing Hub

Full document details: ASTM D5963-97a(2001)e1

sliding a defined rubber test piece under specified conditions over the surface of an abrasive sheet of known abrasiveness *S* (180 to 220 mg) mounted to a rotating drum of specified dimensions.

3.2.1 *Discussion*—The designations ARI_A, ARI_B, ARI_C, and ARI_D are used to indicate that the test was run in accordance with Method A, B, C or D, respectively.

3.3 *"nominal abrasiveness," S_O of the abrasive sheet*, (mg), *n*—a specified (theoretical) mass loss of 200 mg of a defined test piece of a Standard Rubber, obtained by sliding the test piece under specified conditions over the surface of the abrasive sheet mounted to a rotating drum of specified dimensions.

3.4 *abrasiveness, S of the abrasive sheet,* (mg), *n*—the actual mass loss, within a specified range of 180 to 220 mg, of a defined test piece of a Standard Rubber, obtained by sliding the test piece under specified conditions over the surface of the abrasive sheet mounted to a rotating drum of specified dimensions.

3.5 *Standard Rubber*—A natural rubber compound of specified composition, mixed and vulcanized under defined conditions.

3.5.1 *Discussion*—Standard Rubber # 1 is used to determine the abrasiveness, *S*, of the abrasive sheet and to ensure that *S* is within the specified range of 180 to 220 mg. The ratio of the "nominal abrasiveness," S_O, and the actual abrasiveness, *S*, is used to correct the abrasion loss of a test rubber for any deviation of the abrasiveness of the abrasive sheet from the specified "nominal abrasiveness" (200 mg).

4. Summary of Test Method

4.1 This test method provides procedures for preparing cylindrical test pieces of specified dimensions from vulcanized thermoset rubbers or thermoplastic elastomers and for evaluating their abrasion resistance by sliding a test piece across the surface of an abrasive sheet attached to a rotating drum. It also describes the preparation and compliance testing of a Standard Rubber (see Annex A1).

4.2 The test is performed under specified conditions of contact pressure, sliding distance, and travel speed of the test piece, rotational speed of the drum, and degree of abrasiveness of the abrasive sheet.

4.3 The abrasiveness, *S*, of the abrasive sheet is defined by the mass loss in mg of a test piece prepared from Standard Rubber #1 when tested under the same specified conditions.

4.4 Four different methods may be used to test the abrasion resistance. Method A, uses a *non-rotating* test piece and Method B a *rotating* test piece, both utilizing Standard Rubber #1 as the reference. Methods C and D use Standard Rubber #2 as reference with a *non-rotating* and *rotating* test piece, respectively. The rotating test pieces provide, in many cases, a more uniform abrasion wear pattern.

4.5 The abrasion resistance, A_A, obtained in accordance with Method A is reported as abrasion (volume) loss in mm^3, calculated from the mass loss of the test piece, density of the test rubber and the abrasiveness of the abrasive sheet in relation to the "nominal abrasiveness," S_O, defined by a mass loss of 200 mg. A smaller number indicates a higher resistance to abrasion.

4.6 The abrasion resistance, ARI_{A-D}, obtained in accordance with Methods A, B, C and D is reported as the abrasion resistance index in percent, calculated from the mass losses and densities of the Standard Rubbers and test rubbers. A smaller number indicates a lower resistance to abrasion.

4.7 The mass loss obtained by the different methods can differ and the same method shall therefore be used if mass (and volume) losses are to be compared directly.

5. Significance and Use

5.1 Abrasion resistance is a performance factor of paramount importance for many rubber products, such as tires, conveyor belts, power transmission belts, hoses, footwear, and floor covering. A test capable of measuring resistance to abrasion of rubber, including uniformity of wear behavior under abrasive/frictional service conditions is therefore highly desirable.

5.2 This test method may be used to estimate the relative abrasion resistance of different rubbers. Since conditions of abrasive wear in service are complex and vary widely, no direct correlation between this accelerated test and actual performance can be assumed.

5.3 This test method is suitable for comparative testing, quality control, specification compliance testing, referee purposes, and research and development work.

6. Limitations

6.1 Test pieces containing voids or porosity, or both, will yield unreliable test results.

6.2 Test pieces that bounce (chatter) over the surface of the abrasive sheet rather than running smoothly will produce inaccurate test results.

6.3 Test pieces that tend to extensively smear the surface of the abrasive sheet will provide meaningless test results.

6.4 Test results obtained under any of the above conditions shall not be used to reach conclusions regarding the relative abrasion resistance of rubbers.

7. Apparatus and Materials

7.1 *Abrasion Tester.*[7]

7.1.1 The abrasion tester consists of a machine frame holding a laterally movable test piece holder, a rotary cylindrical drum to which an abrasive sheet can be fastened and a drive system as shown in Fig. 1. Dimensions are given in Fig. 2.

7.1.2 The diameter of the cylindrical drum shall be 150.0 ± 0.2 mm (5.906 ± 0.008 in.) and its length approximately 500 mm (20 in.), operating at a rotational frequency of 0.11 ± 0.003 rad/s (40 ± 1 rpm).

7.1.3 The abrasive sheet shall be bonded tightly to the drum using three evenly spaced double faced pressure-sensitive adhesive tapes, extending the full length of the drum. The tapes shall be about 50 mm (2 in.) wide and not more than 0.2 mm

[7] A suitable tester can be obtained under the name Zwick 6102 Abrasion Tester, from Zwick USA, 1620 Cobb International Blvd., Suite 1, Kennesaw, GA 30152, website: www.zwick.com, e-mail: info@zwickusa.com, or from Zwick GmbH & Co., August Nagel Strasse 11, Postfach 4350, D 89079 Ulm, Germany, website: www.zwick.de, e-mail: info@zwick.de.

AVA Documents
Document Sharing Hub

Full document details: ASTM D5963-97a(2001)e1

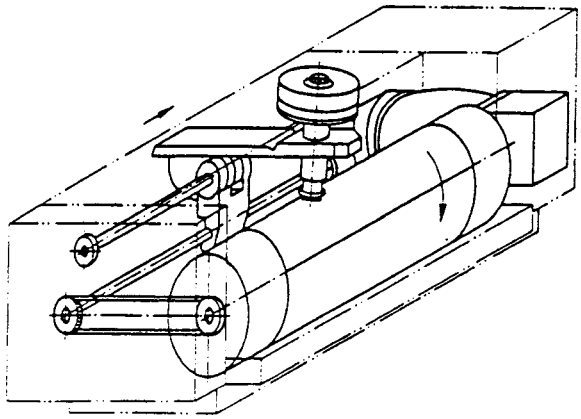

FIG. 1 Abrasion Tester

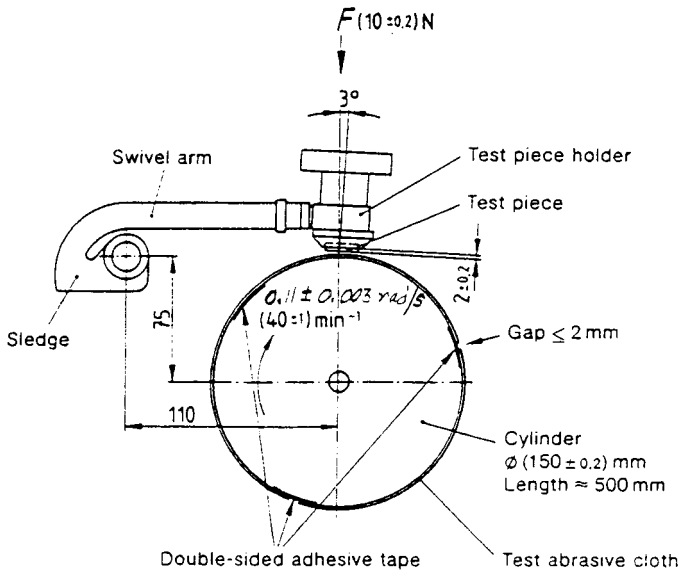

FIG. 2 Side View and Dimensions of Abrasion Tester

(0.008 in.) thick. The gap where the ends of the abrasive sheets meet on the adhesive tapes shall not exceed 2 mm (0.08 in.).

7.1.4 It is mandatory that the abrasive sheet is bonded to the drum in the direction of rotation marked on the surface or back of the sheet.

7.1.5 The test piece holder shall be mounted on a pivoted swivel arm, which can be swung into vertical position to insert and remove the test piece (see Note 1).

NOTE 1—It is recommended to install a device preventing the test piece holder and abrasive sheet from coming into contact and damaging each other.

7.1.6 Suitable attachments may be provided to rotate the test piece around its own axis during the test run by rotation of the test piece holder (Methods B and D). The test piece shall rotate at the rate of 1 revolution for each 50 revolutions of the cylindrical drum with the abrasive sheet fastened to the drum.

7.1.7 The center axis of the test piece holder shall have an angle of 3° to the perpendicular in the direction of rotation and the center of the test piece shall be within ±1 mm (±0.04 in.) directly above the longitudinal axis of the drum.

7.1.8 The design of the swivel arm and holder shall be such that the test piece is pressed against the abrasive sheet with a force of 10.0 ± 0.2 N (2.25 ± 0.04 lbf). Both swivel arm and holder shall be free from vibration during operation.

7.1.9 The test piece holder shall consist of a cylindrical opening with an adjustable diameter of at least 15.5 mm (0.610 in.) to 16.3 mm (0.642 in.) and a device for adjusting the length of the test piece protruding from the opening to 2.0 ± 0.2 mm (0.08 ± 0.008 in.).

7.1.10 The swivel arm with the test piece holder is connected to a worm gear that moves the holder on a guide rod laterally across the surface of the abrasive sheet attached to the cylindrical drum. The lateral displacement shall be approximately 4.2 mm (0.165 in.) per revolution of the drum, so that the test piece passes only four times across the same area of the sheet during one test cycle.

7.1.11 Placement of the holder with the test piece on the drum at the beginning of the test and removal at the end shall be automatic. The normal length of the abrasion path shall be 40.0 ± 0.2 m (131.2 ± 0.7 ft). This is equivalent to about 84 revolutions when allowing for the thickness of 1 mm (0.04 in.) for the abrasive sheet.

7.1.12 For special cases of very high volume loss, half the length of the abrasion path, that is, 20 ± 0.1 m (65.6 ± 0.3 ft), equivalent to roughly 42 revolutions, may be used.

7.1.13 The test machine may be equipped with a vacuum hose and a brush that contacts the drum and aids in the removal of debris.

7.2 *Abrasive Sheet.*[8]

7.2.1 Corundum (aluminum oxide) of grit 60 bonded to a carrier sheet of at least 400 mm (15.8 in.) width, 474 ± 1 mm (18.66 ± 0.04 in.) length and an average thickness of 1 mm (0.04 in.) shall be used as the abrasive medium.

7.2.2 The sheets shall be of an abrasiveness as to cause a mass loss between 180 and 220 mg when tested over an abrasion path of 40 m (131.2 ft) using a non-rotating test piece (Method A) of Standard Rubber #1 specified in Section 8.

7.2.3 Since the abrasiveness of virgin abrasive sheets is usually higher than desired, it is necessary to blunt the sheets with one or two test runs using a steel test piece in place of the Standard Rubber to bring it into the desired range. The direction of rotation used for blunting shall be marked on the sheets.

7.2.4 After blunting, the abrasive sheets shall be thoroughly cleaned by brushing, blowing, or suction and two test runs with the Standard Rubber shall be made.

7.2.5 Test results obtained with abrasive sheets, thus calibrated, are more consistent, and it is normally possible to run several hundred single tests using the same sheet.

7.3 *Test Piece Cutting Tool.*[9]

[8] Suitable abrasive sheets can be obtained under Item No. 1027.10–1 from Zwick USA, 1620 Cobb International Blvd., Suite 1, Kennesaw, GA 30152, website: www.zwick.com, e-mail: info@zwickusa.com, or from Bundesanstalt für Materialforschung und-prüfung (BAM), Unter den Eichen 87, Postfach POB, D 12200 Berlin, Germany, website: www.zwick.de, e-mail: info@zwick.de.

[9] A suitable cutting tool can be obtained under Item No. BH04.6102.060 from Zwick USA, 1620 Cobb International Blvd., Suite 1, Kennesaw, GA 30152, website: www.zwick.com, e-mail: info@zwickusa.com, or from Zwick GmbH & Co., August Nagel Strasse 11, Postfach 4350, D 89079 Ulm, Germany, website: www.zwick.de, e-mail: info@zwick.de.

AVA Documents
Document Sharing Hub

Full document details: ASTM D5963-97a(2001)e1