Designation: D5992 – 96 (Reapproved 2011)

Standard Guide for Dynamic Testing of Vulcanized Rubber and Rubber-Like Materials Using Vibratory Methods[1]

This standard is issued under the fixed designation D5992; the number immediately following the designation indicates the year of original adoption or, in the case of revision, the year of last revision. A number in parentheses indicates the year of last reapproval. A superscript epsilon (ε) indicates an editorial change since the last revision or reapproval.

1. Scope

1.1 This guide covers dynamic testing of vulcanized rubber and rubber-like (both hereinafter termed "rubber" or "elastomeric") materials and products, leading from the definitions of terms used, through the basic mathematics and symbols, to the measurement of stiffness and damping, and finally through the use of specimen geometry and flexing method, to the measurement of dynamic modulus.

1.2 This guide describes a variety of vibratory methods for determining dynamic properties, presenting them as options, not as requirements. The methods involve free resonant vibration, and forced resonant and nonresonant vibration. In the latter two cases the input is assumed to be sinusoidal.

1.3 While the methods are primarily for the measurement of modulus, a material property, they may in many cases be applied to measurements of the properties of full-scale products.

1.4 The methods described are primarily useful over the range of temperatures from −70°C to +200°C (−100°F to +400°F) and for frequencies from 0.01 to 100 Hz. Not all instruments and methods will accommodate the entire ranges.

1.5 When employed for the measurement of dynamic modulus, the methods are intended for materials having complex moduli in the range from 100 to 100 000 kPa (15 to 15 000 psi) and damping angles from 0 to 90°. Not all instruments and methods will accommodate the entire ranges.

1.6 Both translational and rotational methods are described. To simplify generic descriptions, the terminology of translation is used. The subject matter applies equally to the rotational mode, substituting "torque" and "angular deflection" for "force" and "displacement."

1.7 This guide is divided into sections, some of which include:

	Section
Terminology and Symbols	3
Factors Influencing Dynamic Measurement	7
Test Methods and Specimens	8
Nonresonant Analysis Methods and Their Influence on Results	9
Report	10
Mechanical and Instrumentation Factors Influencing Dynamic Measurement	Annex A1
Guide to Further Reading	Appendix X1
Double-Shear Specimens—Derivation of Equations and Descriptions of Specimens	Appendix X2
Torsion Specimens—Derivation of Equations and Descriptions of Specimens	Appendix X3
Compression/Tension Specimens—Derivation of Equations and Descriptions of Specimens	Appendix X4
Free Resonant Vibration—Equations for Log Decrement and Stiffness	Appendix X5
Obtaining Loss Factor and Elastic Stiffness from Transmissibility Curves	Appendix X6

1.8 The values stated in SI units are to be regarded as the standard. The values given in parentheses are for information only.

1.9 *This standard does not purport to address all of the safety concerns, if any, associated with its use. It is the responsibility of the user of this standard to establish appropriate safety and health practices and determine the applicability of regulatory limitations prior to use.*

2. Referenced Documents

2.1 *ASTM Standards:*[2]

D945 Test Methods for Rubber Properties in Compression or Shear (Mechanical Oscillograph)

D1566 Terminology Relating to Rubber

2.2 *ISO Document:*[3]

ISO 2856 Elastomers—General Requirements for Dynamic Testing

[1] This guide is under the jurisdiction of ASTM Committee D11 on Rubber and is the direct responsibility of Subcommittee D11.10 on Physical Testing.

Current edition approved May 1, 2011. Published July 2011. Originally approved in 1996. Last previous edition approved in 2006 as D5992 – 96 (2006)ε1. DOI: 10.1520/D5992-96R11.

[2] For referenced ASTM standards, visit the ASTM website, www.astm.org, or contact ASTM Customer Service at service@astm.org. For *Annual Book of ASTM Standards* volume information, refer to the standard's Document Summary page on the ASTM website.

[3] Available from American National Standards Institute (ANSI), 25 W. 43rd St., 4th Floor, New York, NY 10036, http://www.ansi.org.

Copyright © ASTM International, 100 Barr Harbor Drive, PO Box C700, West Conshohocken, PA 19428-2959. United States

Documents
Document Sharing Hub
Full document details: ASTM D5992-96(2011)

2.3 *DIN Document:*[4]

DIN 53 513 Determination of viscoelastic properties of elastomers on exposure to forced vibration at non-resonant frequencies

3. Terminology

3.1 *Definitions:*

3.1.1 Definitions— The following terms are listed in related groups rather than alphabetically (see also Terminology D1566).

3.1.2 *delta, δ, n— in the measurement of rubber properties*, the symbol for the phase angle by which the dynamic force leads the dynamic deflection; mathematically true only when the two dynamic waveforms are sine waves (Synonym— *loss angle*).

3.1.3 *tandel, tanδ, n*—mathematical tangent of the phase angle delta (δ); pure numeric; often written spaced: tan del; often written using "delta": tandelta, tan delta (Synonym—*loss factor*).

3.1.4 *phase angle, n*—in general, the angle by which one sine wave leads another; units are either radians or degrees.

3.1.5 *loss angle, n*—synonym for delta (δ).

3.1.6 *loss factor, n*—synonym for tandel (tanδ) (η).

3.1.7 *damping, n*—that property of a material or system that causes it to convert mechanical energy to heat when subjected to deflection; in rubber the property is caused by hysteresis; in some types of systems it is caused by friction or viscous behavior.

3.1.8 *hysteresis, n*—the phenomenon taking place within rubber undergoing strain that causes conversion of mechanical energy to heat, and which, in the "rubbery" region of behavior (as distinct from the glassy or transition regions), produces forces essentially independent of frequency. (See also *hysteretic* and *viscous*.)

3.1.9 *hysteresis loss, n*—per cycle, the amount of mechanical energy converted to heat due to straining; mathematically, the area within the hysteresis loop, having units of the product of force and length.

3.1.10 *hysteresis loop, n*—the Lissajous figure, or closed curve, formed by plotting dynamic force against dynamic deflection for a complete cycle.

3.1.11 *hysteretic, adj— as a modifier of damping*, descriptive of that type of damping in which the damping force is proportional to the amplitude of motion across the damping element.

3.1.12 *viscous, adj—as a modifier of damping*, descriptive of that type of damping in which the damping force is proportional to the velocity of motion across the damping element, so named because of its derivation from an oil-filled dashpot damper.

3.1.13 *equivalent viscous damping, c, n*—at a given frequency, the quotient of F"(1) divided by the velocity of the imposed deflection.

$$c = F''(1)/\omega X^*(1) \quad (1)$$

3.1.13.1 *Discussion*—The equivalent viscous damping is useful when dealing with equations in many texts on vibration. It is an equivalent only at the frequency for which it is calculated.

3.1.14 *dynamic, adj—in testing*, descriptive of a force or deflection function characterized by an oscillatory or transient condition, as contrasted to a static test.

3.1.15 *dynamic, adj—as a modifier of stiffness or modulus*, descriptive of the property measured in a test employing an oscillatory force or motion, usually sinusoidal.

3.1.16 *static, adj (1)—in testing*, descriptive of a test in which force or deflection is caused to change at a slow constant rate, within or in imitation of tests performed in screw-operated universal test machines.

3.1.17 *static, adj (2)—in testing*, descriptive of a test in which force or deflection is applied and then is truly unchanging over the duration of the test, often as the mean value of a dynamic test condition.

3.1.18 *static, adj (3)—as a modifier of stiffness or modulus*, descriptive of the property measured in a test performed at a slow constant rate.

3.1.19 *stiffness, n*—that property of a specimen that determines the force with which it resists deflection, or the deflection with which it responds to an applied force; may be static or dynamic (See also *complex, elastic, damping*.) (Synonym—*spring rate*).

3.1.20 *modulus, n*—the ratio of stress to strain; that property of a material which, together with the geometry of a specimen, determines the stiffness of the specimen; may be static or dynamic, and if dynamic, is mathematically a vector quantity, the phase of which is determined by the phase of the complex force relative to that of deflection. (See also *complex, elastic, damping*.)

3.1.21 *complex, adj—as a modifier of dynamic force*, descriptive of the total force; denoted by the asterisk (*) as a superscript symbol (F*); F* can be resolved into elastic and damping components using the phase of displacement as reference.

3.1.22 *elastic, adj—as a modifier of dynamic force*, descriptive of that component of complex force in phase with dynamic deflection, that does not convert mechanical energy to heat, and that can return energy to an oscillating mass-spring system; denoted by the single prime (') as a superscript symbol, as F'.

3.1.23 *damping, adj—as a modifier of dynamic force*, descriptive of that component of complex force leading dynamic deflection by 90 degrees, and that is responsible for the conversion of mechanical energy to heat; denoted by the double prime (") as a superscript symbol, as F".

3.1.24 *storage, adj—as a modifier of energy*, descriptive of that component of energy absorbed by a strained elastomer that is not converted to heat and is available for return to the overall

[4] Available from Beuth Verlag GmbH (DIN-- DIN Deutsches Institut fur Normung e.V.), Burggrafenstrasse 6, 10787, Berlin, Germany, http://www.en.din.de.

AVA Documents Document Sharing Hub

Full document details: ASTM D5992-96(2011)

mechanical system; by extension, descriptive of that component of modulus or stiffness that is elastic.

3.1.25 *Fourier analysis, n—in mathematics*, analysis of a periodic time varying function that produces an infinite series of sines and cosines consisting of a fundamental and integer harmonics which, if added together, would recreate the original function; named after the French mathematician Joseph Fourier, 1768–1830.

3.1.26 *shear, adj*—descriptive of properties measured using a specimen deformed in shear, for example, shear modulus.

3.1.27 *bonded, adj—in describing a test specimen*, one in which the elastomer to be tested is permanently cemented to members of much higher modulus for two purposes: (*1*) to provide convenient rigid attachment to the test machine, and (*2*) to define known areas for the application of forces to the elastomer.

3.1.28 *unbonded, adj—in describing a test specimen*, one in which the elastomer is molded or cut to shape, but that otherwise demands that forces be applied directly to the elastomer.

3.1.29 *bond area, n—in describing a bonded test specimen*, the cemented area between elastomer and high-modulus attachment member.

3.1.30 *contact area, n— in an unbonded specimen*, that area in contact with a high-modulus fixture, and through which applied forces pass; may or may not be constant, and if lubricated, may deliberately be allowed to change.

3.1.31 *lubricated, adj— in describing an elastomeric test specimen having at least two plane parallel faces and to be tested in compression*, one in which the plane parallel faces are separated from plane parallel platens of the apparatus by a lubricant, thereby eliminating, insofar as possible, friction between the elastomer and platens, permitting the contact surfaces of the specimen to expand in area as the platens are moved closer together.

3.1.32 *Mullins Effect, n*—the phenomenon occurring in vulcanized rubber whereby the second and succeeding hysteresis loops exhibit less area than the first, due to breaking of physical cross-links; may be permanent or temporary, depending on the nature of the material. (See also *preflex effect*.)

3.1.33 *preflex effect, n*—the phenomenon occurring in vulcanized rubber, related to the Mullins effect, whereby the dynamic moduli at low strain amplitude are less after a history to high strains than before. (See also *Mullins effect.*) (Also called strain history effect.)

3.1.34 *undamped natural frequency, n—in a single-degree-of-freedom resonant spring-mass-damper system*, that natural frequency calculated using the following equation:

$$f_n = \mathrm{SQRT}\,(K'/M) \tag{2}$$

where:

K' = the elastic stiffness of the spring, and
M = the mass.

3.1.35 *transmissibility, n—in the measurement of forced resonant vibration*, the complex quotient of response divided by input; may be absolute or relative.

3.1.36 *absolute, adj—in the measurement of vibration*, a quantity measured relative to the earth as reference.

3.1.37 *relative, adj—in the measurement of vibration*, a quantity measured relative to another body as reference.

3.1.38 *LVDT, n*—abbreviation for "Linear Variable Differential Transformer," a type of displacement transducer characterized by having a primary and two secondary coils arranged along a common axis, the primary being in the center, and a movable magnetic core free to move along the axis that induces a signal proportional to the distance from the center of its travel, and of a polarity determined by the phase of the signals from the two secondary coils. The rotary version is called a Rotary Variable Differential Transformer (RVDT).

3.1.39 *mobility analysis, n*—the science of analysis of mechanical systems employing a vector quantity called "mobility," characteristic of lumped constant mechanical elements (mass, stiffness, damping), and equal in magnitude to the force through the element divided by the velocity across the element.

3.1.40 *impedance analysis, n*—the science of analysis of mechanical systems employing a vector quantity called "impedance," characteristic of lumped constant mechanical elements (mass, stiffness, damping), and equal in magnitude to the velocity across the element divided by the force through the element.

3.1.40.1 *Discussion*—Mobility analysis is sometimes easier to employ than impedance because mechanical circuit diagrams are more intuitively constructed in the mobility system. Either will provide the understanding necessary in analyzing test apparatus.

3.2 *Symbols:*

3.2.1 *General Comments:*

3.2.1.1 Many symbols use parentheses. The (t) denotes a function of time. When enclosing a number, such as (1) or (2), the reference is to the number or "order" of the harmonic obtained through Fourier analysis (see Appendix X2). Thus, all of the parameters indicated as (1) are obtained from the fundamental, or first, harmonic. A second harmonic from the complex force would be denoted as F*(2), etc. It should be noted that each harmonic has a phase angle associated with it. In the case of the fundamental, it is the loss angle (δ). The phase angles become important for the higher harmonics if the reverse Fourier transform is employed to reconstitute data in the time domain.

3.2.1.2 Three superscripts are used: the asterisk (*), the single prime ('), and the double prime ("). This guide discusses dynamic motion and force. As raw data, each is a "complex" parameter, denoted by the asterisk. In this guide force is referenced to motion for its phase. The component of force in phase with motion is denoted by a single prime; the component leading motion by 90 degrees is denoted by the double prime. Quantities deriving from force, such as stress, stiffness, and modulus, like force, are also vector quantities and use the same superscripts to identify their phase relationship.

3.2.1.3 In some literature, the asterisk is omitted from the parameter imposed on the specimen. Thus, X*(t) is often

AVA Documents
Document Sharing Hub

Full document details: ASTM D5992-96(2011)

abbreviated X(t) for a motion-excited system, F*(t) as F(t) in a force-excited one. This guide uses the longer complete form for both.

3.2.2 *Motion, Force and Stiffness:*

3.2.2.1 Following are definitions of symbols describing test parameters and quantities derived from them, presented in the order in which they become available and are used. In forced nonresonant apparatus, X*(t) and F*(t) are measured directly by deflection and force transducers.

$X^*(t)$ = dynamic deflection of the specimen as a function of time.
$F^*(t)$ = dynamic complex force as a function of time.
$X^*(1)$ = dynamic deflection, single amplitude, of the fundamental component of X*(t); obtained by Fourier analysis or equivalent means.
$F^*(1)$ = dynamic complex force, single amplitude, of the fundamental component of F*(t), obtained by Fourier analysis or equivalent means.
δ = phase angle by which F*(1) leads X*(1); only true of F*(t) and X*(t) if both are pure sine waves, which does not occur with most elastomers.
η = $\tan\delta = F''(1)/F'(1)$ = loss factor.
$F'(1)$ = $F^*(1)\cos\delta$ = dynamic elastic force, single amplitude; that component of F*(1) in phase with X*(1).
$F''(1)$ = $F^*(1)\sin\delta$ = dynamic damping force, single amplitude; that component of F*(1) leading X*(1) by 90 degrees.
$K^*(1)$ = $F^*(1)/X^*(1)$ = dynamic complex stiffness, magnitude, obtained by taking the ratio of F*(1) and X*(1); has the phase of F*(1).
$K'(1)$ = $F'(1)/X^*(1)$ = dynamic elastic stiffness, magnitude, obtained by taking the ratio of F'(1) and X*(1); has the phase of F'(1).
$K''(1)$ = $F''(1)/X^*(1)$ = dynamic damping stiffness, magnitude, obtained by taking the ratio of F"(1) and X*(1); has the phase of F"(1).

3.2.2.2 From the last three, the dynamic stiffnesses, three corresponding dynamic moduli can be calculated using geometric factors appropriate to the specimen. In the case of shear moduli, the symbols are G*(1), G'(1), and G"(1). For extension or compression moduli, the symbols are E*(1), E'(1), and E"(1). Appendixes X2, X3, and X4 give the relationships for three common geometries.

3.2.3 *Resonant Systems:*

3.2.3.1 Additional symbols are used with resonant systems to describe the imposed and response motions and forces:

φ = phase angle by which either the imposed force or base motion leads the motion of the mass. (Should not be confused with the phase angle δ which is the angle by which complex force through a specimen leads the deflection across the specimen.)
β = frequency ratio, the quotient of the frequency of interest divided by the undamped natural frequency.
ζ = viscous damping ratio, c/c_c.
ω_n = undamped natural frequency, radians per second.
f_n = undamped natural frequency, Hz.

3.2.4 *Symbols for Torsion:*

3.2.4.1 Torsion functions are analogous to those of translation. The corresponding symbols and units are:

	Translational	Torsional
Displacement	X	θ
Units, SI	mm	radian
Units, English	inch	radian
Force, torque	F	S
Units, SI	newton	newton metre
Units, English	pound	pound inch

The asterisk, single and double prime, and parentheses are used exactly as for translational cases.

3.2.5 *Voltage Symbols:*

3.2.5.1 Symbols used to describe voltage signals from instrumentation require subscripts to identify what they represent. Hence, for example, E_x represents a voltage proportional to motion, and E_F a voltage proportional to force. Here also the asterisk, single and double primes, and the parentheses are used as with their corresponding mechanical counterparts.

3.2.6 *Geometric Symbols:*

3.2.6.1 Symbols used to describe specimens and apparatus are defined in the figures depicting the methods and specimens involved. A few symbols have been preempted. For instance, t always indicates time, never thickness. Frequency, not force, preempts the lower case *f*; force must use the upper case *F*. Dimensional symbols such as *a, b, r*, and *L* will have assignments specific to a particular specimen geometry and will mean other things in other geometries.

4. Summary

4.1 The methods covered in this guide are divided into three general categories:

4.1.1 Forced nonresonant vibration,
4.1.2 Free resonant vibration, and
4.1.3 Forced resonant vibration.

4.2 Brief descriptions of representative methods in each category are given, together with sufficient mathematical formulae to indicate how results are calculated and presented.

5. Significance and Use

5.1 This guide is intended to describe various methods for determining the dynamic properties of vulcanized rubber materials, and by extension, products utilizing such materials in applications such as springs, dampers, and flexible load-carrying devices, flexible power transmission couplings, vibration isolation components and mechanical rubber goods in general. As a guide, it is intended to provide descriptions of options available rather than to specify the use of any one in particular.

6. Hazards

6.1 There are no hazards inherent in the methods described; there are no reagents or hazardous materials used. The machinery used may be potentially hazardous, especially in forced nonresonant testing machines. These may involve the creation of significant forces and motions, and may move unexpectedly. Caution should always be used when operating such machinery. The problem is especially acute in servohydraulic machinery, which is at once the most versatile yet potentially

AVA Documents
Document Sharing Hub

Full document details: ASTM D5992-96(2011)

dangerous class of machines used in dynamic testing. The design of machines and fixtures should be done with this in mind; pinch points should be eliminated or guarded.

6.2 Normal safety precautions and good laboratory practice should be observed when setting up and operating any equipment. This is especially true when tests are to be performed at low or high temperatures, when flammable coolants or electrical heaters are apt to be used.

7. Factors Influencing Dynamic Measurement

7.1 Dynamic measurement of rubber is influenced by three major factors: (*1*) thermodynamic, having to do with the internal temperature of the specimen; (*2*) mechanical, having to do with the test apparatus; and (*3*) instrumentation and electronics, having to do with the ability to obtain and handle signals proportional to the needed physical parameters. The latter two factors are discussed in detail in Annex A1. The thermodynamic factor will be examined in 7.2 and 7.3.

7.2 Any rubber specimen exhibits a rise in internal temperature with mechanical strain. The magnitude of the rise is dependent on the damping coefficient (tandel), and the thermal properties and geometry of the rubber and metal. It is axiomatic that the thermodynamic behavior of a laboratory modulus-measurement specimen is never exactly like that of the commercial product whose behavior is to be predicted. Accordingly, the laboratory engineer and the product designer must work together. The laboratory must produce elastic and damping data for the rubber, measured with the entire body of rubber at the temperature reported. This needs to be done over a range of temperatures, frequencies, and strains, selected after consultation with the product designer. The designer then must take this information and predict the internal temperature of the product. This will require knowing the geometry and thermal properties of the rubber, the heat sink or source ability of attached metal or other rigid parts, the service conditions of motion, frequency, initial temperature, and operating time. Prediction may be an iterative process, where the first calculated temperature changes the stiffness and damping, which change the strain, which in turn changes the heat dissipation and hence the temperature, etc.

7.3 To put this matter in perspective, rubber having a loss factor of 0.7 may rise as much as 0.5°C (1°F) for each cycle of motion if the shear strain amplitude is ±100 %. Lesser strains, and lesser values of tandel, produce less temperature rise. The possibility of significant temperature rise, relative to the reported ambient or starting temperatures, points out the desirability of methods capable of performing a dynamic test in as few cycles as possible. Where many test conditions must be imposed, it is necessary to pause an appropriate time between conditions for the temperature to return to its specified value. Good heat sinking, either by conduction from the rubber to the grips, or by forced convection, helps in maintaining the desired temperature.

7.4 The selection of test apparatus and test method are influenced by the material discussed in 7.2 and 7.3. Especially in the measurement of modulus, a balance must be found between the needs of the analysis equipment for data (can it acquire data in a few cycles), the need of the modulus measurement to be at a known temperature (few cycles), and the probable need of the elastomer to be past the experience of the Mullins Effect (past the first cycle). Conversely, a stiffness measurement on a full-scale product might be desired at either a known temperature (few cycles) or at steady state, the latter requiring a heat sink typical of service.

8. Test Methods and Specimens

8.1 *Introduction:*

8.1.1 Three basic vibratory methods exist:

8.1.1.1 Forced vibration of a nonresonant system involving only the specimen,

8.1.1.2 Free vibration of a resonant system involving the specimen and a mass, and

8.1.1.3 Forced vibration of the above resonant system.

8.1.2 The first and third can be broken down further into two kinds of apparatus, those that impose a dynamic motion and those that impose a dynamic force. The imposed parameter could have any of the following wave shapes: sinusoidal, triangular, square, or random. In this guide we will assume that the imposed parameter is always sinusoidal.

8.1.3 In addition to the availability of three methods, there is also a choice of specimen geometry. Elastomers may be strained in:

8.1.3.1 *Shear*—May be single, double, or quad. Usually double, with two identical rubber elements symmetrically disposed on opposite sides of a central rigid member.

8.1.3.2 *Compression*—May be bonded, unbonded, or lubricated.

8.1.3.3 *Tension.*

8.1.3.4 *Bending*—May be fixed-free, fixed-fixed, fixed-guided, or three-point bending of beams.

8.1.3.5 *Torsion.*

8.1.4 Some materials exhibit a large change in dynamic modulus with change in dynamic strain. In applications where this is important, attention should be paid to whether the specimen geometry and flexing method impose uniform strain throughout the body of the specimen, or whether the strain varies within the specimen.

8.2 *Forced Nonresonant Vibration:*

8.2.1 Forced nonresonant vibration offers the broadest frequency range of all methods. It can be accomplished with mechanical crank-and-link mechanisms, with electrodynamic linear force motors, and with servohydraulics. When done with electrodynamics or servohydraulics it adds ease of amplitude adjustment. Servohydraulics offers, as well, the possibility of obtaining the required data in as few as one cycle, which makes temperature rise during the test negligible.

8.2.2 A typical servohydraulic test system is depicted in Fig. 1. An all-mechanical system having many of the same features is shown in Fig. 2. The former has the possibility of imposing either motion or force as the input. The mechanical system shown can apply only vibratory motion. Fig. 3 shows an electrodynamically excited system. (All-mechanical machines using rotating weights or oscillating masses to develop sinusoidal forces are possible but are extremely complex, and will not be dealt with here.)

AVA Documents
Document Sharing Hub

Full document details: ASTM D5992-96(2011)

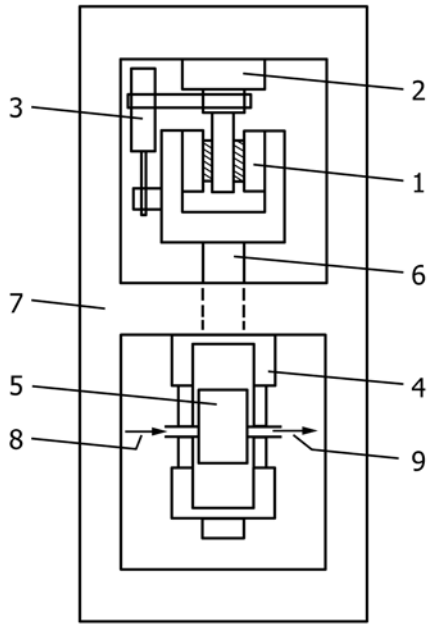

1 Test Specimen
2 Force Transducer
3 Deflection Transducer
4 Hydraulic Actuator
5 Electrohydraulic Servovalve
6 Actuator Piston Rod
7 Rigid Frame
8 Hydraulic Supply
9 Hydraulic Return

FIG. 1 Typical Servohydraulic Test System

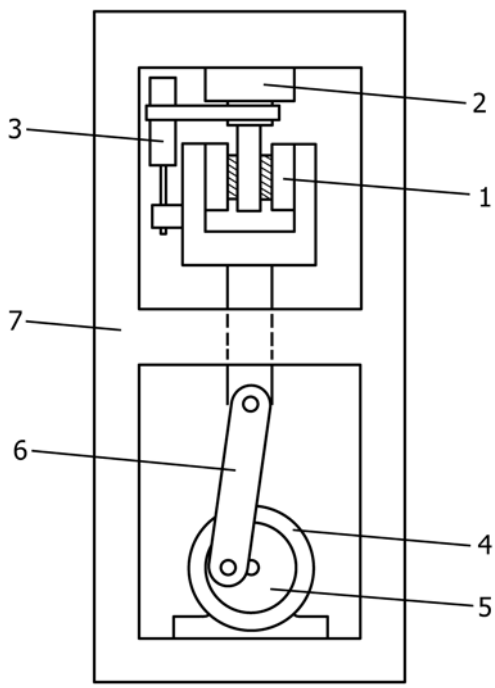

1 Test Specimen
2 Force Transducer
3 Deflection Transducer
4 Motor
5 Eccentric (may be adjustable)
6 Connecting Rod
7 Rigid Frame

FIG. 2 Typical All-Mechanical Test System

8.3 *Free Resonant Vibration:*

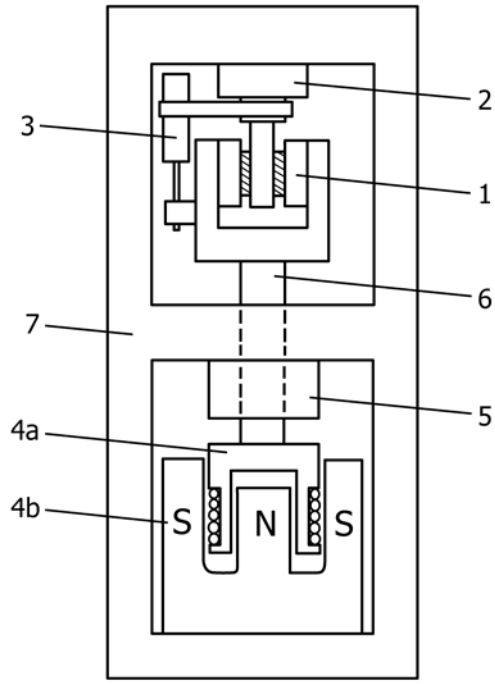

1 Test Specimen
2 Force Transducer
3 Deflection Transducer
4a Actuator Coil
4b Actuator Magnet
5 Piston Guide Bearing
6 Piston Rod
7 Rigid Frame

FIG. 3 Typical Test System Utilizing an Electrodynamic Exciter

8.3.1 Any resonant system consists of two essential elements: a spring and a mass. A third element, a damper, may be added to cause decay of the resonant vibration amplitude. In elastomers, the elasticity (springiness) and damping are both inherent in the material. Testing by free resonant vibration involves deflecting the specimen, then releasing it and allowing the mass to oscillate freely (hence "free" vibration) at a frequency determined by the stiffness of the specimen and the magnitude of the mass. This frequency of natural oscillation is termed, appropriately, the "natural frequency."

8.3.2 As the mass and spring oscillate, they pass energy back and forth. It alternately takes the form of stored and kinetic energy. Some is lost to damping and is converted to heat. As it is lost, the oscillatory amplitude becomes less and less, or "decays." By measuring the deflection amplitude of each successive cycle, a measure of damping can be had through the application of the logarithmic decrement, or "log decrement," for which the symbol is Δ. Fig. 4 illustrates how the peaks of vibratory response decay with time.

8.3.3 This method has the advantage of requiring little equipment, but suffers the inherent and serious problem of not being able to provide a constant strain amplitude. This poses a problem in determining the influence of dynamic strain on elastic and damping stiffnesses. With highly damped elastomers the technique is difficult to apply because so few cycles are available for use. The equations for logarithmic decrement in terms of the decaying amplitudes assume linearity and that moduli are not influenced by strain amplitude.

AVA Documents
Document Sharing Hub

Full document details: ASTM D5992-96(2011)

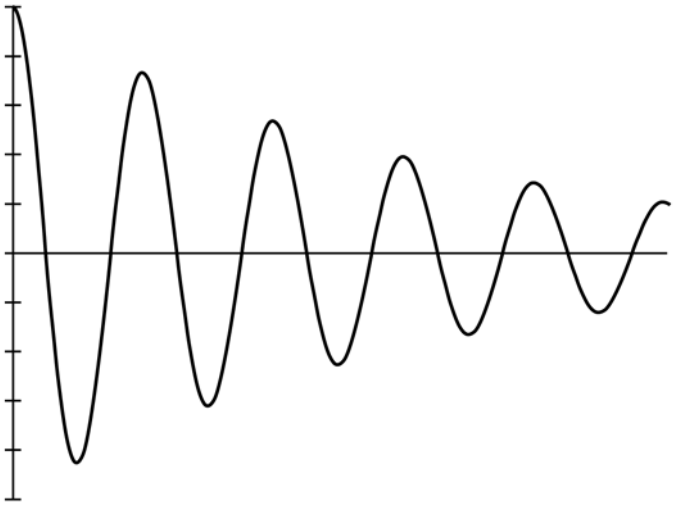

FIG. 4 Typical Decay Wave

8.3.4 The same decay curve from which log decrement is obtained can be used to calculate specimen stiffness. Calculation of log decrement utilized the amplitudes; calculation of stiffness will use the period of oscillation and knowledge of the mass if translational, or of the moment of inertia if torsional.

8.3.5 Appendix X5 explains the method in more detail and gives the equations for log decrement, loss factor, and stiffness.

8.4 *Forced Resonant Vibration:*

8.4.1 As with the free resonant system, the elastomeric spring with its inherent damping, and a mass, are necessary. This method, however, requires an external source of vibratory energy. Two sources are possible: motion excitation ("shake table") and force excitation. The shake table case is the easier of the two to implement, and is the only one described.

8.4.2 Traditional texts on vibration theory deal with systems using purely elastic springs, and viscous dampers. It is important to note the difference between viscous damping and that which occurs in rubber. Force due to viscous damping is proportional to velocity, and hence is a first-power function of frequency; the damping force in elastomers is nearly independent of frequency. To use most textbook equations with elastomeric isolators one must use an "equivalent viscous damping" for the particular frequency of interest, or use an entirely different model. The model based on "hysteretic damping" is a better representation of the damping behavior of typical elastomers. This model is also often referred to as "complex," "solid," or "structural" damping.

8.4.3 *Absolute and Relative Motions:*

8.4.3.1 In considering forced resonant vibration it is important to distinguish between "absolute" and "relative" transmissibility and phase. Absolute transmissibility is the amplitude of the response motion of the supported mass divided by the amplitude of the input motion. Absolute phase is the phase angle between the above two quantities, considered as sine waves. Relative transmissibility is the amplitude of deflection of the elastomeric spring divided by the amplitude of motion of the shake table input. Relative phase is the phase angle between these two quantities, considered as sine waves. The response motion of the supported mass and the deflection of the specimen are entirely different things. Not all texts explain these relationships clearly.

8.4.3.2 Figs. 5-7 show the case of absolute transmissibility and phase. Figs. 8-10 show relative transmissibility and phase. The plots shown are theoretical curves based on mathematical equations; they are not test data. In all of them, "frequency ratio" β is the ratio of the vibration frequency to the undamped natural frequency. Undamped natural frequency is calculated using the mass and the elastic stiffness, using Eq X5.5 or Eq X5.7 (see Appendix X5). On the plots, the undamped natural frequency is denoted by $\beta = 1$.

8.4.4 *Hysteretic and Viscous Damping Effects—Absolute Case:*

8.4.4.1 The curves for absolute transmissibility and phase are not the same for the viscous and hysteretically damped cases. They differ in two ways: (*1*) the frequency at which peak amplitude occurs is different, and (*2*) the slope of the transmissibility curves is different in the isolation range.

8.4.4.2 Fig. 5 and Fig. 6 show absolute transmissibility for both damping types on the same plots for comparison. The first includes only frequencies near peak transmissibility to show clearly how the peaks occur at different frequencies. The second extends well into the isolation range to show how the slopes differ. Viscous damping causes peak absolute transmissibility to occur at β less than unity. With hysteretic damping it always occurs at β = unity. In the range of isolation, the slope of the hysteretically damped case, typical of elastomeric vibration isolators, is 12 dB/octave. The slope of the viscous damped case is 6 dB/octave. Measurement of this slope is one way to demonstrate that elastomers exhibit hysteretic and not viscous damping.

8.4.4.3 Fig. 7 shows absolute phase versus frequency over the smaller frequency span. In this curve it should be noted that 90° phase shift does not occur at β = unity for either viscous or hysteretic damping.

8.4.5 *Hysteretic and Viscous Damping Effects—Relative Case:*

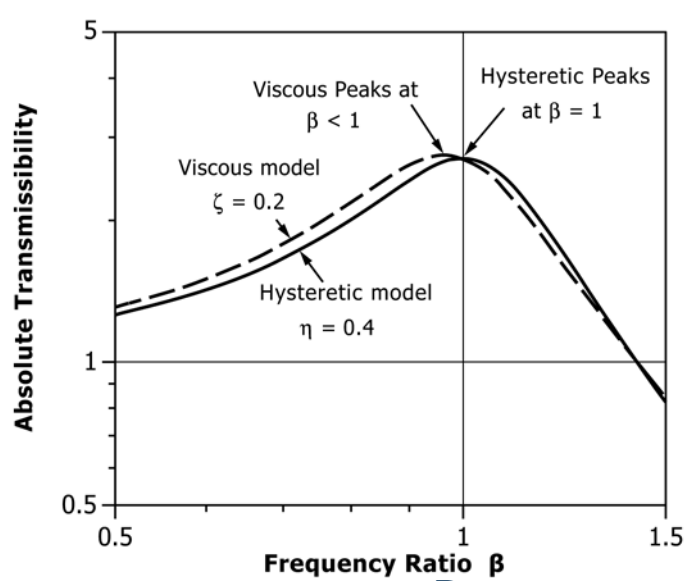

FIG. 5 Absolute Transmissibility Versus β

AVA Documents
Document Sharing Hub

Full document details: ASTM D5992-96(2011)

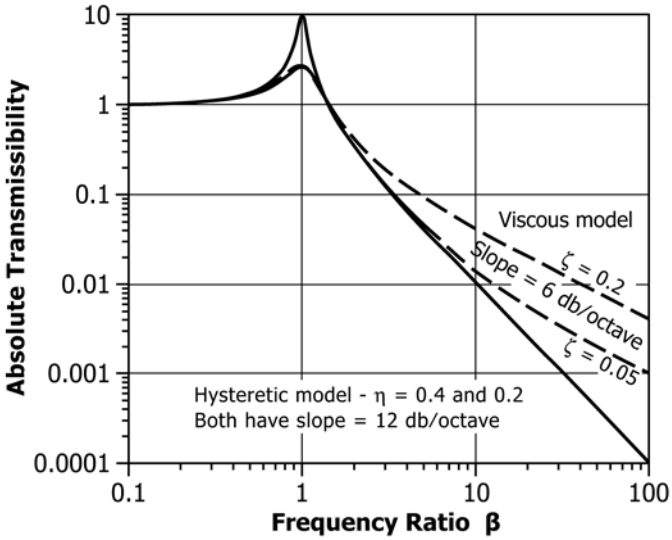

FIG. 6 Absolute Transmissibility Versus β

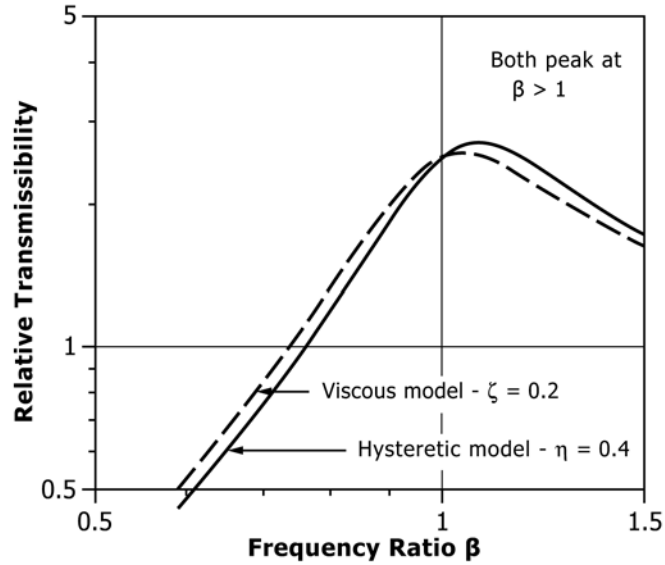

FIG. 8 Relative Transmissibility Versus β

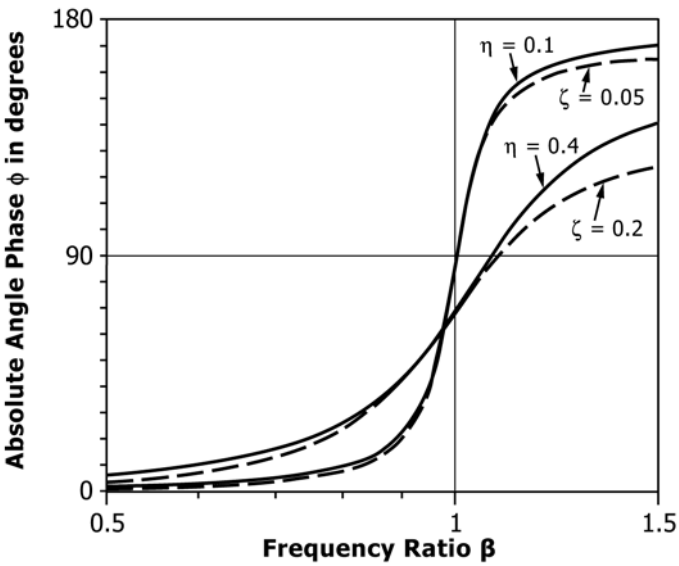

FIG. 7 Absolute Phase Versus β

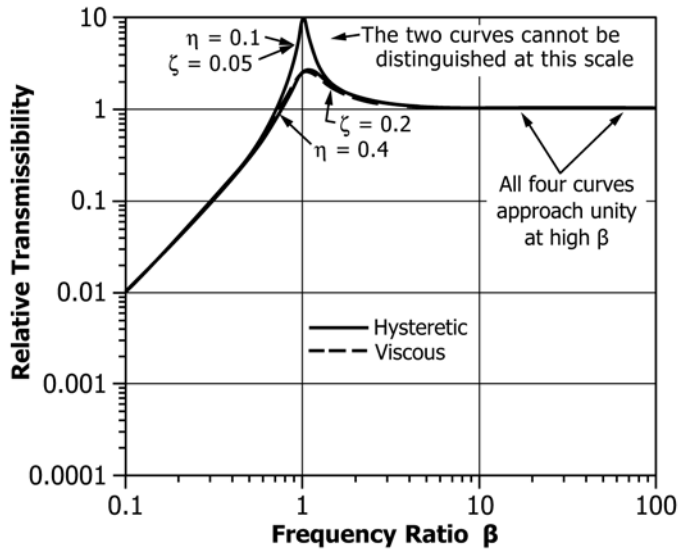

FIG. 9 Relative Transmissibility Versus β

8.4.5.1 Figs. 8-10 examine the same relationships for the case of relative transmissibility and phase. Peak transmissibility now occurs above $\beta = 1$ for both viscous and hysteretic damping. But notice that 90° phase shift now occurs at β = unity for both kinds of damping. Fig. 9 shows that both damping models exhibit a uniform transmissibility of unity at high values of β; the displacement of the specimen is equal to the shake table input since the supported mass is isolated; it is stationary.

8.4.5.2 For the shake table relative transmissibility case, for both hysteretic and viscous models, the relative phase angle at the undamped natural frequency is 90°. From the experimenter's standpoint, it would be nice to utilize this fact to determine the undamped natural frequency, and from it the elastic stiffness. Unfortunately, measurement of the dynamic deflection of the specimen (the relative motion) is not easily accomplished.

8.4.6 *Advantages and Disadvantages of Forced Resonant Method:*

8.4.6.1 Determination of dynamic properties over an extended range of frequency is not practical with forced resonant vibration. For a given specimen the only variable available to change the resonant frequency is mass, and it is seldom practical to vary it over a range of more than ten times. This changes the resonant frequency only by a factor of about three (the square root of ten).

8.4.6.2 Compared with free resonant vibration, the forced resonant method has the advantage of allowing the experimenter to adjust for and to maintain a desired resonant amplitude. It has the disadvantage of requiring steady state vibration, and therefore will suffer from internal heat generation within the specimen and consequent change in specimen temperature. See Section 7 on thermodynamic factors and their influence on dynamic measurement.

AVA Documents
Document Sharing Hub

Full document details: ASTM D5992-96(2011)