This international standard was developed in accordance with internationally recognized principles on standardization established in the Decision on Principles for the Development of International Standards, Guides and Recommendations issued by the World Trade Organization Technical Barriers to Trade (TBT) Committee.

Designation: D6039/D6039M – 18

Standard Specification for Open and Covered Wood Crates[1]

This standard is issued under the fixed designation D6039/D6039M; the number immediately following the designation indicates the year of original adoption or, in the case of revision, the year of last revision. A number in parentheses indicates the year of last reapproval. A superscript epsilon (ε) indicates an editorial change since the last revision or reapproval.

This standard has been approved for use by agencies of the U.S. Department of Defense.

1. Scope

1.1 This specification covers five types and two styles of open and one type, and one style of covered wood crates designed for net loads not exceeding 4000 lb [1814 kg]. Open crates are suitable for shipment of items, which are not readily susceptible to damage from outside forces, and which require only limited protection against the elements.

1.2 If environmental protection is necessary, use of a shroud or a covered crate should be considered. With the exception of Type III, Style B crates, the crates included in this specification are for use in domestic and overseas shipment of net loads not over 4000 lb [1814 kg]. Use shall be confined to items falling within the dimensions and weight limitations of the types and grades specified in Table 1.

1.3 In general, Style A crates have heavier components and are to withstand rather severe handling and multiple shipments (heavy-duty), while Style B crates should be confined to handling and shipping that impose only light to moderate hazards on the container (light-duty). Types I, IV, and V crates are general purpose types; Type II crates are designed for items such as ladders, tubing, extrusions, or wallboard which do not require blocking, bracing, or cushioning; and Type III, Style B crates are designed for such self-supporting material as channels, angles, or other structural members where the container serves only as a means for more convenient stacking and handling.

1.4 If the use of other construction methods or techniques is acceptable and permitted (see 5.1.13), the resulting packaging systems shall be of equal or better performance than would result from the use of these specified materials and procedures. The appropriate distribution cycle specified in Practice D4169 can be used to develop comparative procedures and criteria.

1.5 The values stated in either SI units or inch-pound units are to be regarded separately as standard. The values stated in each system may not be exact equivalents; therefore, each system shall be used independently of the other. Combining values from the two systems may result in non-conformance with the standard.

1.6 *This standard does not purport to address all of the safety concerns, if any, associated with its use. It is the responsibility of the user of this standard to establish appropriate safety and health practices and determine the applicability of regulatory limitations prior to use.*

1.7 *This international standard was developed in accordance with internationally recognized principles on standardization established in the Decision on Principles for the Development of International Standards, Guides and Recommendations issued by the World Trade Organization Technical Barriers to Trade (TBT) Committee.*

2. Referenced Documents

2.1 *ASTM Standards:*[2]

D996 Terminology of Packaging and Distribution Environments

D1990 Practice for Establishing Allowable Properties for Visually-Graded Dimension Lumber from In-Grade Tests of Full-Size Specimens

D3953 Specification for Strapping, Flat Steel and Seals

D4169 Practice for Performance Testing of Shipping Containers and Systems

D4675 Guide for Selection and Use of Flat Strapping Materials[1]

D6199 Practice for Quality of Wood Members of Containers and Pallets

D6253 Practice for Treatment and/or Marking of Wood Packaging Materials

F1667 Specification for Driven Fasteners: Nails, Spikes, and Staples

IEEE/ASTM SI 10 Standard for Use of International System of Units (SI): The Modern Metric System

[1] This specification is under the jurisdiction of ASTM Committee D10 on Packaging and is the direct responsibility of Subcommittee D10.12 on Shipping Containers, Crates, Pallets, Skids and Related Structures.

Current edition approved Oct. 1, 2018. Published November 2018. Originally approved in 1996. Last previous edition approved in 2011 as D6039/D6039M – 11. DOI: 10.1520/D6039_D6039M-18.

[2] For referenced ASTM standards, visit the ASTM website, www.astm.org, or contact ASTM Customer Service at service@astm.org. For *Annual Book of ASTM Standards*volume information, refer to the standard's Document Summary page on the ASTM website.

Copyright © ASTM International, 100 Barr Harbor Drive, PO Box C700, West Conshohocken, PA 19428-2959. United States

Documents
Document Sharing Hub

Full document details: ASTM D6039/D6039M-18

TABLE 1 Crate Classification

Type	Style A, Heavy Duty				Style B, Light Duty			
	Maximum Net Load (lb/kg)	Inside Dimensions, max			Maximum Net Load (lb/kg)	Inside Dimensions, max		
		Length (ft/mm)	Width (ft/mm)	Height (ft/mm)		Length (ft/mm)	Width (ft/mm)	Height (ft/mm)
I	250 [113]	4 [1200]	3 [900]	3 [900]	200 [90]	4 [1200]	3 [900]	3 [900]
II[A]	1000 [450]	12 [3600]	4 [900]	2 [450]	No Style B			
III	No Style A				No load or size restriction except as limited by handling methods			
IV	1000 [450]	6 [1829]	4 [900]	4 [900]	No Style B			
V[B]	2500 [1125]	12 [3600]	6 [1829]	6 [1829]	4000 [1814]	32 [9600]	6 [1829]	10 [3000]

[A] Items such as ladders, tubing, and extrusions weighing less than 200 lb [90 kg] and not exceeding 20 ft [6000 mm] long, 3 ft [900 mm] wide and 2 ft [600 mm] high may be packed in Type II crates.
[B] Type V, Styles A and B crates shall be further classified as being either nondemountable or demountable. Type V, Style B crates may be open or covered.

2.2 *ASME Standards:*[3]

ASME B18.2.1-2010 Square, Hex, Heavy Hex, and Askew Head Bolts and Hex, Heavy Hex, Hex Flange, Lobed Head, and Lag Screws (Inch Series)

ASME B18.2.2-2010 Nuts for General Applications: Machine Screw Nuts, Hex, Square, Hex Flange, and Coupling Nuts (Inch Series)

ASME B18.2.3.8M-1981 Metric Hex Lag Screws

ASME B18.2.4.3M-1979 Metric Slotted Hex Nuts

ASME B18.5-2008 Round Head Bolts (Inch Series)

ASME B18.5.2.2M-1982 Metric Round head Square Neck Bolts

ASME B18.22M-1981 Metric Plain Washers

ASME B18.21.1-2009 Washers: Helical Spring-Lock, tooth lock, and Plain Washers (Inch Series)

2.3 *APA – The Engineered Wood Association Standards:*[4]

APA PS 1 Structural Plywood (with Typical APA Trademarks)

APA PS 2 Performance Standard for Wood-Based Structural-Use Panels

APA PS 20 American Softwood Lumber Standard

2.4 *Hardwood Plywood and Veneer Association (HPVA) Standard:*[5]

ANSI/HPVA HP-1-2004 American National Standard for Hardwood and Decorative Plywood

2.5 *National Hardwood Lumber Association (NHLA) Standard:*[6]

NHLA Rules for the Measurement and Inspection of Hardwood and Cypress

2.6 *National Motor Freight Traffic Association Standard:*[7]

National Motor Freight Classification

2.7 *International Standard:*[8]

ISPM 15 International Standards for Phytosanitary Measures Publication No. 15 (ISPM 15), Regulation of Wood Packaging Material in International Trade

[3] Available from the American Society of Mechanical Engineers, United Engineering Center, 345 East 47th St., New York, NY 10017.

[4] Available from APA – The Engineered Wood Association, 7011 S. 19th Street, Tacoma, WA 98466-5333.

[5] Available from Hardwood Plywood and Veneer Association (HPVA), P.O. Box 2789, Reston, VA 22090-0789. www.hpva.org

[6] Available from National Hardwood Lumber Association (NHLA), 6830 Raleigh LaGrange Rd., Memphis, TN 38134. www.natlhardwood.org

[7] Available from the American Trucking Association, Inc., Traffic Department, 2200 Mill Rd., Alexandria, VA 22314.

[8] Available from the International Plant Protection Convention, www.ippc.int.

3. Terminology

3.1 General definitions for packaging and distribution environments are found in Terminology D996.

NOTE 1—Crate components discussed herein were selected on the basis of component function.

3.2 *Definitions of Terms Specific to This Standard: (See Note 1.)*

3.2.1 *base*—lower frame of the crate on which its content rests.

3.2.2 *batten*—reinforcement used to hold a series of members together to create rigidity; when used flushed with the end, it becomes a cleat.

3.2.3 *cleat*—a piece of lumber used to strengthen or support the framework of the crate.

3.2.4 *crate*—a container with structural framework fastened together to form a rigid structure enclosure, typically having an open construction concept with little or no panel support.

3.2.5 *crossmember*—member running perpendicular to longitudinal members

3.2.6 *diagonal*—angle member placed between vertical and horizontal members within a frame to provide rigidity to the crate.

3.2.7 *end*—composed of members to which battens or cleats are attached forming a structural component along the width of the crate.

3.2.8 *end floor member*—end frame members are similar to side frame members but perpendicular to the long dimension.

3.2.9 *filler pieces*—boards placed across the ends of thin, non-load-bearing floorboards, which serve to fill the space below the lower frame member of the crate sides.

3.2.10 *joist*—load-supporting member of the top frame, spanning the width of the crate.

3.2.11 *lateral member*—transverse member of the frame.

3.2.12 *load-bearing floorboard*—transverse base members, which serve to distribute and transfer loads to the outside skids.

3.2.13 *longitudinal member*—lengthwise member of the frame.

3.2.14 *lower edge member*—horizontal members at the bottom of the side and end frames.

3.2.15 *member*—parts that form the fundamental structure of both sheathed and open crate; members are typically boards.

AVA Documents Document Sharing Hub

Full document details: ASTM D6039/D6039M-18

3.2.16 *side*—composed of faceboards or panels to which battens or cleats are attached forming a structural component along the length of a container.

3.2.17 *skid*—longitudinal members attached to the crate bottom, which serve to support and transfer the load to the side panels.

3.2.18 *strut*—members placed vertically between upper and lower members.

3.2.19 *top*—top most panel of the crate. Also referred by "lid" or "cover".

3.2.20 *upper edge member*—horizontal members at the top of the side and end frames.

4. Classification

4.1 Crates covered by this specification shall be of the types and styles shown in Table 1 for maximum net loads and maximum dimensions.

5. Ordering Information

5.1 Purchasers should select the preferred options permitted herein, and include the following information in procurement documents:

5.1.1 Title, number, and date of this specification,

5.1.2 Type and style of crate required (see Table 1),

5.1.3 Combination of end and side panels required (see 7.7.1 and 7.7.2),

5.1.4 When interior side battens shall be replaced by exterior side cleats for forklift handling (see 7.7.4),

5.1.5 Alternative method of assembly of demountable crate if required (see 7.10.6),

5.1.6 When demountability is required for Type V crates (see 7.10 and 7.11),

5.1.7 When Type V, Style B crates shall be open or covered (see 7.11),

5.1.8 When covering material shall be other than as specified (see 7.11.6),

5.1.9 When demountability is required for covered crates (see 7.11.7),

5.1.10 When assembly instructions shall be furnished (see 7.12),

5.1.11 When the crates are to be furnished other than knocked down (see 9.1),

5.1.12 When packaging (see 9.1) and marking (see 9.2) is other than as specified,

5.1.13 When proof that other construction methods or techniques are acceptable (see 1.4) is required, and

5.1.14 When ISPM 15 compliance is required (see 9.3).

6. Materials

6.1 *Materials*—Materials shall be as specified herein. Materials not specified shall be selected by the contractor/crate builder and shall be subject to all the provisions of this specification. Materials shall be free of defects, which adversely affect performance or serviceability of the finished product.

6.2 *Lumber*—Lumber components shall conform to Practice D6199, APA PS 20, or NHLA Rules. Wood members shall be the industries' commonly accepted practice for nominal sizes and wood groups and shall conform to commercial practice standards in accordance with Practice D1990, unless otherwise specified. Lumber components shall have a target thickness and width uniform in dimension and 50 % of components shall meet or exceed the target dimensions at the time of component manufacture.

6.3 *Plywood*—Plywood shall be performance-rated paneling manufactured in accordance with APA PS 1, APA PS 2, or ANSI/HPVA HP-1-2004. All panels shall be bonded with moisture-resistant adhesive and be identified as either Exposure 1 or Exterior.

6.4 *Fasteners*—Fasteners are classified as driven nails, bolts, lag bolts, wood screws, and metal strapping.

6.4.1 *Nails*—Nails shall be in accordance with Specification F1667 and other industry standards. Nails are classified as plain-shank, helically threaded, annularly threaded, fluted, or twisted square wire.

6.4.2 *Staples*—Staples have either round-wire or approximately square-wire legs, referring to the cross-sectional shape of the wire. Staples shall be made of low-carbon steel wire and galvanized.

6.4.3 *Bolts, Lag Bolts, Nuts, and Washers*—Bolts, lag bolts, nuts and washers shall conform to industry standards, including the following:

ASME B18.2.1-2010 (ASME B18.2.3.8M-1981),
ASME B18.5-2008 (ASME B18.5.2.2M-1982),
ASME B18.2.2-2010 (ASME B18.2.4.3M-1979), and
ASME B18.21.1-2009 (ASME B18.22M-1981).

6.4.4 *Wood Screws*—Screws shall be inserted into the crate components to be assembled with a screwdriver or screw motion machine tool. Approximately two-thirds of the screw length and seven times the shank diameter shall be the penetration length into the fastening member. Where predrilling is required, the maximum lead-hold diameter shall be the fastener-shank diameter, and the pilot-hole diameter shall not be larger than the thread-root diameter.

6.4.5 *Metal Strapping*—Strapping used to reinforce crates shall conform to Specification D3953 and other industry standards. Strapping finish shall be as specified herein. Refer to Guide D4675 for additional guidelines.

7. Construction

7.1 *Nailing Procedure*—For fastening covering materials to members, the length of nails shall not be less than 1 in. [25 mm] and shall not exceed the sum of the thickness of the covering material and the member. Nail sizes specified for the fabrication of the various crates are based on Group I and II woods (see Practice D6199). When Group III and IV woods are used, nail sizes may be one penny size smaller than those specified. The patterns to be used for the nailing of two flat pieces of lumber shall conform to the details shown in Fig. 1 or as specified herein. Unless otherwise specified herein, the following requirements shall determine size, placement, and quantity of nails:

7.1.1 All adjacent crate members shall be fastened to each other, either directly or by means of the covering.

AVA Documents
Document Sharing Hub

Full document details: ASTM D6039/D6039M-18

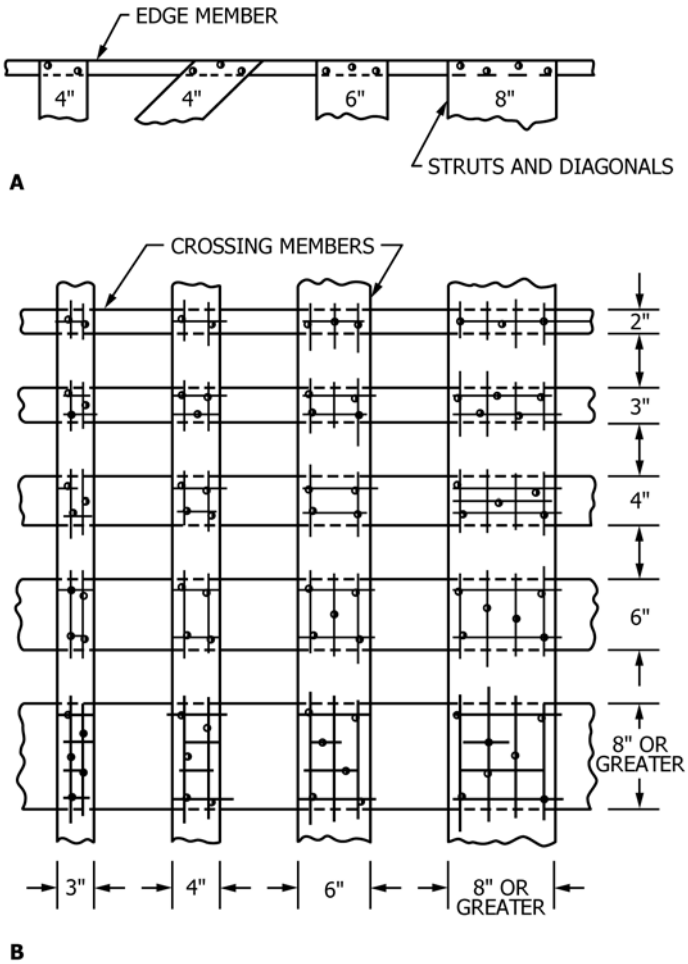

NOTE 1—All widths are nominal.

NOTE 2—Similar patterns shall be used when boards cross at angles other 90°.

FIG. 1 Nailing Patterns

7.1.2 All nails that are not to be clinched shall be cement coated or mechanically deformed (helically or annularly threaded).

7.1.3 Nails shall be driven through the thinner member into the thicker member wherever possible.

7.1.4 When the flat faces of lumber are nailed together and the combined thickness is 3 in. [75 mm] or less (except for the top joists and covering material), nails shall be long enough to pass through both thicknesses and shall be clinched not less than ¼ in. [6 mm] nor more than ⅜ in. [9 mm].

7.1.5 When the flat faces of lumber are nailed together and the combined thickness is more than 3 in. [75 mm] or when the flat face of one or more pieces is nailed to the edge or end face of another, nails shall not be clinched. The portion of the nail in the thicker piece shall not be less than two times the length of the nail in the thinner pieces for ten penny (3 in. [76 mm]) nails and smaller, and not less than 1½ in. [38 mm] for twelve penny (3 ¼ in. [82 mm]) nails and larger.

7.1.6 When splitting occurs, the nails shall be slightly blunted. When blunting does not prevent the splitting, holes slightly smaller than the diameter of the nail shall be drilled for each nail.

7.1.7 Nails shall be driven so that neither the head nor the point projects above the surface of the wood. Occasional overdriving will be permitted, but nails shall not be overdriven more than one eighth the thickness of the piece holding the head.

7.1.8 Nails shall be positioned not less than the thickness of the piece from the end nor less than one half the thickness of the piece from the side edge of the lumber whenever possible. Nails driven into the side edge of lumber shall be centered on the side edge.

7.1.9 When two members having parallel grain are attached, the number of rows of nails shall be determined by the nominal width of surfaces in contact, one row for widths up to and including 2 in. [50 mm], two rows for widths between 2 in. [50 mm] and 6 in. [150 mm], and three rows for widths over 6 in. [150 mm].

7.1.10 When plywood is nailed to cleats, nails shall be spaced not more than 4 in. [100 mm] apart on centers placed in staggered rows which are not less than 1¾ in. [44 mm] apart or less than ¾ in. [19 mm] from the edge of the cleat.

7.2 *Bolt Application*—Holes shall be prebored to receive carriage bolts and shall be the exact diameter of the bolt. The lead holes for lag bolts shanks shall be the same diameter as the shank, even though the threaded portion may have a greater diameter than the shank. The diameter of the lead hole for the threaded part of the lag bolt shall be as in Table 2. Lag bolts shall be placed by being turned in the holes the full length of the bolt and shall not be driven in with a hammer or by any similar means. If for any reason the thread in the wood is stripped when the lag bolts are placed, the lag bolt shall be removed and placed in a new hole near the old position. A flat washer shall be used under the head of each lag bolt and under the nut of each carriage bolt. After the nut is placed, the thread of the carriage bolt projecting beyond the nut shall be painted with a suitable metal primer or similar material.

7.3 *Staples*—The crown of the staples used for fastening covering materials to frame members shall not be less than ⅜ in. [9 mm]. The length of the staples shall not exceed the sum of the thickness of the covering material and the frame member; except that, staples shall never be less than 1 in. [25 mm] in length.

7.4 *Splices*—Splices and butt joints made in frame members and skids of long crates shall be as shown in Fig. 2.

7.5 *Type I Crates—Style A (see Fig. 3)*—The load and size limitations shall be as specified in Table 1. Style A crates shall be used only for items forming a Type I load and weighing not more than 250 lb [113 kg].

TABLE 2 Lead Hole Diameter for Threaded Part of Lag Bolt

Diameter of Threaded Portion of Lag Bolt, in. [mm]	Diameter of Lead Hole	
	Group I, II, and III Woods, in. [mm]	Group IV Woods, in. [mm]
¼ [6]	3⁄16 [5]	3⁄16 [5]
5⁄16 [8]	¼ [6]	¼ [6]
⅜ [10]	¼ [6]	5⁄16 [8]
½ [13]	⅜ [10]	7⁄16 [11]
⅝ [16]	⅜ [10]	½ [13]
¾ [19]	½ [13]	⅝ [16]

Documents
Document Sharing Hub

Full document details: ASTM D6039/D6039M-18

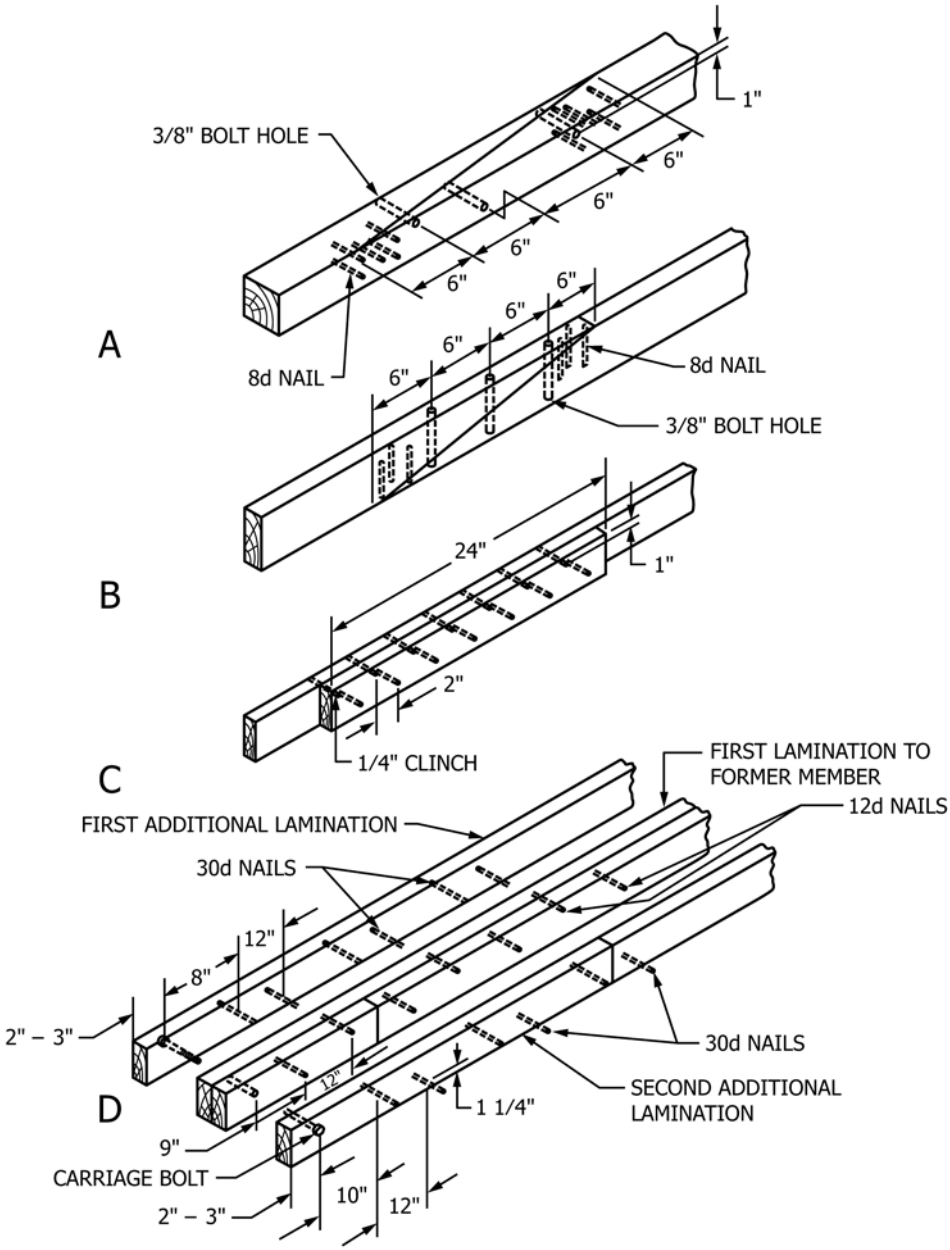

NOTE 1—A—splice of 4-×-4 in. [100 × 100 mm] or 4-×-6 in. [100 × 150 mm] skids; B—splice of 2-in. member; C—splice of 1-in. member; D—lamination of skid.

FIG. 2 Splicing of Members

7.5.1 *Base*—Skids shall be nominal 2 × 4 [50 × 100 mm] lumber. Diagonals shall be 1 × 4 in. [25 × 100 mm] in size. End floor members shall be the same thickness and width as the skid, except that when used as load-bearing floorboards, their sizes shall be as specified in Table 3. End floor members shall be bolted to each skid with ⅜-in. [9-mm] diameter carriage bolts as specified in 7.2. Single-piece rubbing strips used on each skid shall be minimum 3 × 4 in. [75 × 100 mm] in size and beveled at each end at an angle of 45° for at least one-half their thickness. The rubbing strip length shall be less than the skid length to allow open space at each end for sling and fork truck handling. The open space shall not be less than 4 in. [100 mm] and not more than 10-in. [250-mm] long. On crates over 36-in. [900-mm] long, the rubbing strip length shall be adjusted to provide a distance of not more than 28 in. [700 mm] between end openings.

7.5.2 *Side, End, and Top Panels*—All members of the side, end, and top panels shall be nominal 1 × 4 [50 × 100 mm] lumber. Nailing patterns shall be as specified in 7.1 and as shown in Fig. 1.

7.5.3 *Assembly*—Assembly of crates shall be as shown in Fig. 3 and as specified herein. Nailing shall be as specified herein and in 7.1. The sides shall be fastened to the base by nailing the extensions of the vertical struts and diagonals to the skids with eight penny (2½ in. [63 mm]) nails. The ends shall be fastened to the base by nailing the lower edge members of the

AVA Documents
Document Sharing Hub

Full document details: ASTM D6039/D6039M-18

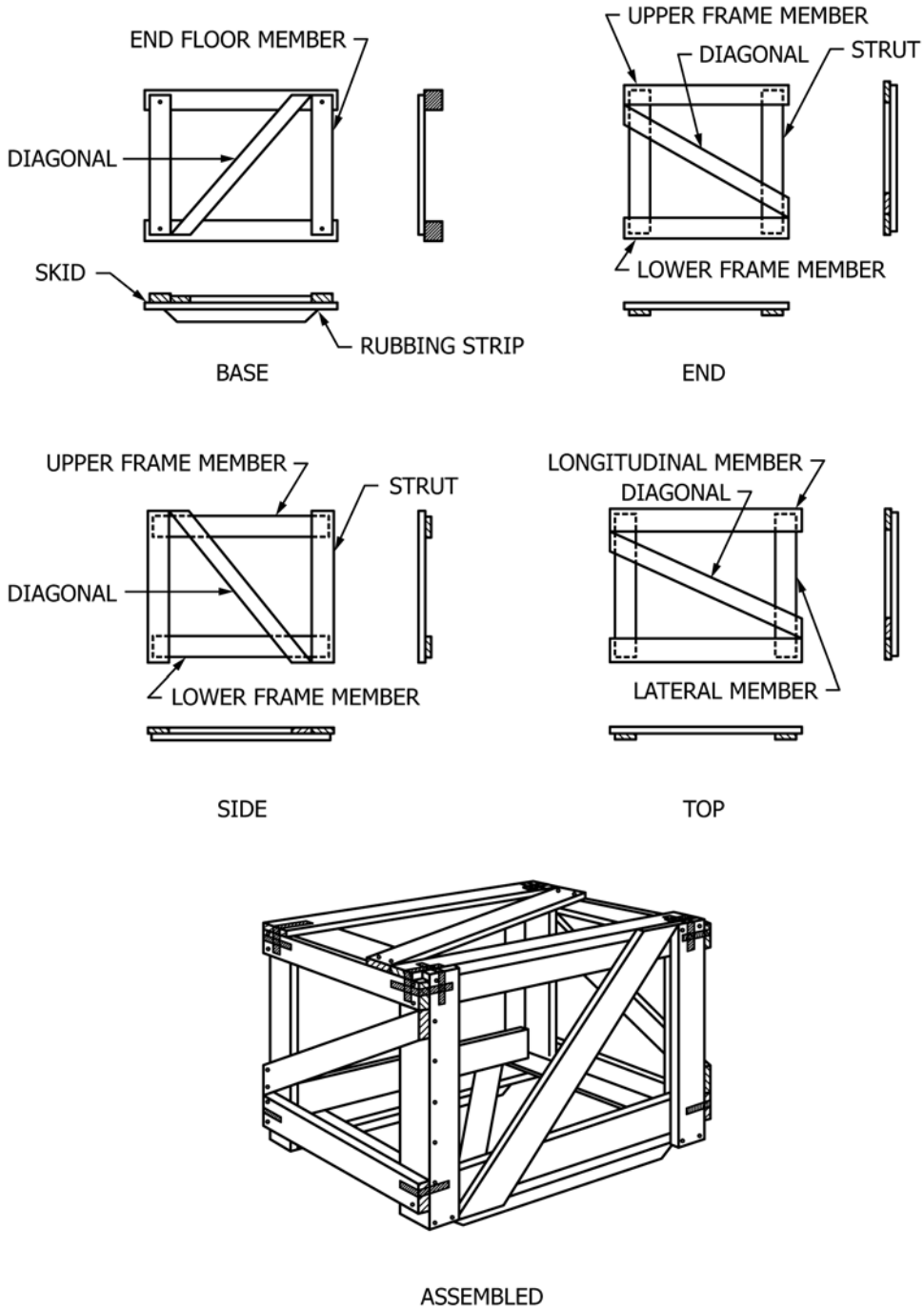

FIG. 3 Type I, Style A Crate Assembly

end panels to the end floor member with eight penny (2½ in. [63 mm]) nails spaced 6 to 8 in. [150 to 200 mm] apart. The sides shall be fastened to the ends by nailing the end vertical struts of the sides to the vertical struts of the ends with eight penny (2½ in. [63 mm]) nails spaced 8 to 10 in. [200 to 250 mm] apart. The sides shall be fastened to the top by nailing the extensions of the diagonals and vertical struts of the longitudinal members of the top with eight penny (2½ in. [63 mm]) nails. The top shall be fastened to the ends by nailing the extensions of the longitudinal and diagonal members of the top to the upper edge member of the ends with eight penny (2½ in. [63 mm]) sinker nails. The upper edge members of the ends shall be nailed to the edge lateral members of the top with eight penny (2½ in. [63 mm]) nails spaced 8 to 10 in. [200 to 250 mm] apart.

AVA Documents
Document Sharing Hub

Full document details: ASTM D6039/D6039M-18

TABLE 3 Allowable Load in lb [kg] Per in. [mm] of Load-Bearing Floorboard Width of Groups I and II Woods

NOTE 1—When Group IV woods are used, the allowable loads may be increased by 20 %.

Distance Between Skids, in. [mm]	Nominal Thickness of Floorboard, in. [mm]					
	1 [25]	2 [50]	3 [75]	4 [100]	6 [150]	8 [200]
12 [30]	50 [18]	200 [90]	557 [251]	1090 [491]	2690 [1211]	4680 [2106]
18 [450]	34 [15]	134 [60]	370 [167]	740 [333]	1790 [806]	3140 [1413]
24 [600]	25 [11]	100 [45]	280 [126]	545 [245]	1350 [608]	2330 [1049]
30 [750]	20 [9]	80 [36]	222 [100]	450 [203]	1150 [518]	1870 [842]
36 [900]	17 [8]	66 [30]	185 [83]	361 [162]	895 [403]	1560 [702]
42 [1050]	15 [7]	57 [27]	158 [71]	311 [140]	767 [345]	1335 [601]
48 [1200]	12 [5]	50 [23]	139 [63]	272 [122]	671 [302]	1170 [527]
54 [1350]	11 [5]	45 [20]	124 [55]	242 [110]	596 [268]	1039 [468]
60 [1500]	10 [5]	40 [18]	111 [50]	218 [98]	537 [242]	936 [421]
66 [1650]	9 [4]	37 [17]	104 [47]	198 [89]	488 [220]	850 [383]

7.6 *Type I Crates—Style B (see* Fig. 4*)*—The load and size limitations shall be as specified in Table 1. Style B crates shall be used only for items forming a Type I load and weighing not more than 200 lb [90 kg].

7.6.1 *Frame Member Sizes*—All frame members shall be 1 × 3 in. [25 × 75 mm] in size for net loads up to 100 lb [45 kg] and 1 × 4 in. [25 × 100 mm] in size for loads between 100 and 200 lb [45 and 90 kg].

7.6.2 *Assembly*—Assembly of the crates shall be as shown in Fig. 4. Diagonals, struts, crossmembers, and longitudinal members shall be nailed together in patterns as shown in Fig. 1 with six penny (2 in. [510 mm]) nails.

7.7 *Type II Crates—Style A*—The load and size limitations shall be as specified in Table 1. Style A crates shall be used only for items forming a Type II load and weighing not more than 1000 lb [450 kg].

7.7.1 *Ends*—The ends shall be of lumber or cleated-plywood as shown in Fig. 5. The cleats shall be fastened to the end boards or to the plywood with two rows of nails spaced 4 in. [100 mm] apart in each row, staggered and clinched. The minimum thickness of the end boards and plywood and the minimum size of the end cleats shall be as in Table 4. Additional vertical filler cleats shall be used in the ends when the unsupported span between cleats is greater than 36 in. [900 mm].

7.7.2 *Sides*—The sides of the crates shall be of lumber or cleated-plywood as shown in Fig. 5. When lumber is used, the sides shall be constructed of not more than three pieces for heights of 15 in. [375 mm] or more, not more than two pieces for heights between 7½ and 15 in. [188 and 375 mm], and one piece for heights 7½ in. [188 mm] or less. The minimum thickness of the lumber and plywood, and the minimum size of

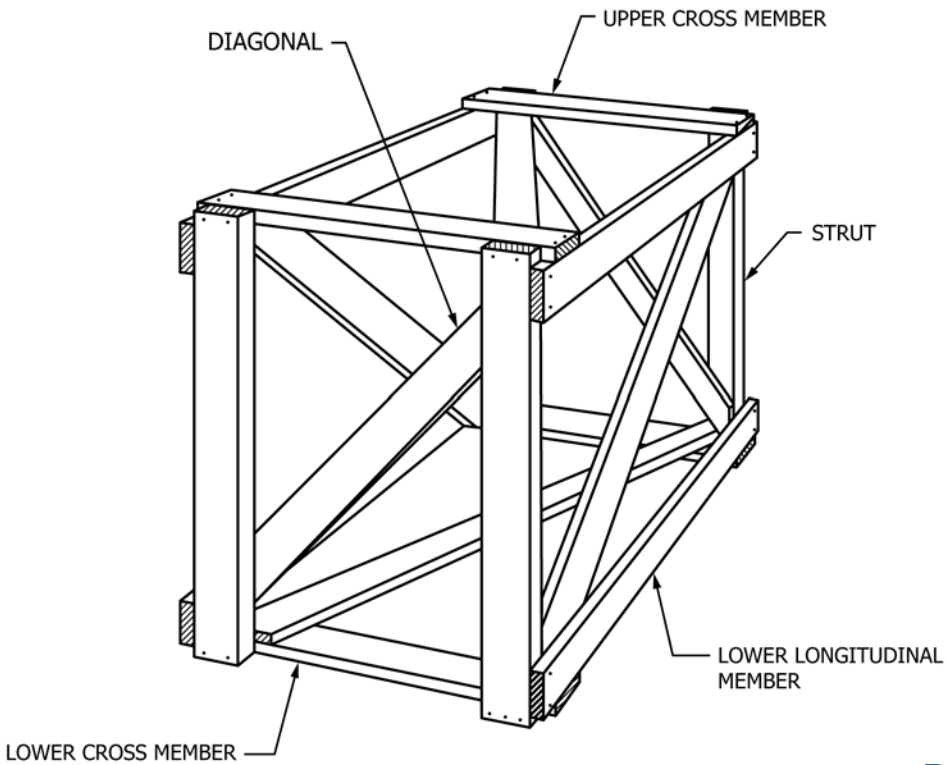

FIG. 4 Type I, Style B Crate Assembly

Documents
Document Sharing Hub
Full document details: ASTM D6039/D6039M-18