Designation: D6147 – 97 (Reapproved 2014)

Standard Test Method for Vulcanized Rubber and Thermoplastic Elastomer—Determination of Force Decay (Stress Relaxation) in Compression[1]

This standard is issued under the fixed designation D6147; the number immediately following the designation indicates the year of original adoption or, in the case of revision, the year of last revision. A number in parentheses indicates the year of last reapproval. A superscript epsilon (ε) indicates an editorial change since the last revision or reapproval.

1. Scope

1.1 This standard specifies two methods for determining the decrease in counterforce exerted by a test specimen of vulcanized rubber or thermoplastic elastomer which has been compressed at a constant deformation under specified conditions of time and temperature.

1.2 This document was developed based on testing in air and liquids.

1.3 *This standard does not purport to address all of the safety concerns, if any, associated with its use. It is the responsibility of the user of this standard to establish appropriate safety and health practices and determine the applicability of regulatory limitations prior to use.*

2. Referenced Documents

2.1 *ASTM Standards:*[2]

D573 Test Method for Rubber—Deterioration in an Air Oven

D1349 Practice for Rubber—Standard Conditions for Testing

D3182 Practice for Rubber—Materials, Equipment, and Procedures for Mixing Standard Compounds and Preparing Standard Vulcanized Sheets

D3767 Practice for Rubber—Measurement of Dimensions

D4483 Practice for Evaluating Precision for Test Method Standards in the Rubber and Carbon Black Manufacturing Industries

E145 Specification for Gravity-Convection and Forced-Ventilation Ovens

3. Terminology

3.1 *Definitions of Terms Specific to This Standard:*

3.1.1 *Compressive Stress, n*—the time-dependent force necessary to maintain a constant compressive strain, divided by the original cross-sectional area over which the force is applied.

3.1.2 *Force Decay, n*—the decrease in stress which has occurred after a specified time-interval, during application of a constant deformation, expressed as a percentage of the stress at the commencement of that time-interval. (Stress relaxation is a synonym.)

4. Summary of Test Method

4.1 *Method A*—The test specimen is compressed at the test temperature, and it is maintained at this temperature throughout the test period, all force measurements being made at the test temperature.

4.2 *Method B*—The test specimen compression and the initial measurement of the counterforce take place at 23 ± 2°C (73 ± 4°F); the test specimen is then stored in a chamber controlled at the test temperature, but it is removed from the chamber for each of the subsequent force measurements, which are made at 23 ± 2°C (73 ± 4°F).

4.3 The two methods, A and B, of carrying out the measurement do not give the same values of force decay and comparison of values obtained from the two methods must be avoided. The method selected for use depends on the purpose of the test. Thus, for fundamental studies and in applications where sealing at elevated temperatures is a problem, method A may be preferred, and in applications where temperature cycling from normal to an elevated temperature is a problem, method B may be preferred.

5. Significance and Use

5.1 When a constant strain is imposed on rubber, the force necessary to maintain that strain is not constant but decreases with time; this phenomenon is called force decay (stress relaxation). Conversely, when rubber is subjected to a constant stress, an increase in the deformation takes place in time; this behavior is called creep. These phenomena are of practical significance in rubber articles, such as seals and gaskets.

[1] This test method is under the jurisdiction of ASTM Committee D11 on Rubber and is the direct responsibility of Subcommittee D11.10 on Physical Testing.

Current edition approved Nov. 1, 2014. Published December 2014. Originally approved in 1997. Last previous edition approved in 2008 as D6147 – 97 (2008)ε1. DOI: 10.1520/D6147-97R14.

[2] For referenced ASTM standards, visit the ASTM website, www.astm.org, or contact ASTM Customer Service at service@astm.org. For *Annual Book of ASTM Standards* volume information, refer to the standard's Document Summary page on the ASTM website.

Copyright © ASTM International, 100 Barr Harbor Drive, PO Box C700, West Conshohocken, PA 19428-2959. United States

Documents
Document Sharing Hub
Full document details: ASTM D6147-97(2014)

5.2 The processes responsible for force decay may be either physical or chemical in nature, and under all normal conditions both processes will occur simultaneously. However, at ambient or low temperatures and/or short times, force decay is dominated by physical processes, while at elevated temperatures and/or long times, chemical processes are dominant. Hence, it is neither safe to extrapolate time/force decay curves in order to predict force decay after periods considerably longer than those covered by the test, nor to use tests at higher temperatures as accelerated tests to give information on force decay at lower temperatures.

5.3 In addition to the need to specify the temperature and time-intervals in a force decay test, it is also necessary to specify the initial stress and the previous mechanical history of the test specimen, since these may also influence the measured force decay, particularly in rubbers containing fillers.

6. Apparatus

6.1 *Compression Device,* consisting of two parallel, flat plates, between the faces of which the test specimens are compressed. The two devices shown schematically in Fig. 1 and Fig. 2 were found to be acceptable through interlaboratory testing. Material of construction of the jig shall not be subject to attack from the test environment (for example acidic oil).

6.2 The finish of the surface of the compression plates shall not exceed 0.6 µm (24 micro inches) arithmetical mean deviation from the mean line of the profile. The plates shall be sufficiently rigid to withstand the stress without bending, and of sufficient size to ensure that the whole of the compressed test specimen is within the area of the plates.

6.3 The compression device shall be connected with suitable equipment for compressing the test specimen to the specified compression within 30 s. It shall be capable of setting and maintaining the compression during the whole duration of test and shall be such that it can be kept in an oven at the specified test temperature. Care shall be taken to ensure that there is no loss of heat from the test specimen, for example by conduction through metal parts which are connected with the outside of the oven.

6.4 *Counterforce measuring device,* capable of measuring compression forces in the desired range with an accuracy of ±1 %. The device may be such as to contain the test specimens during the whole duration of the test, in which case continuous measurements are possible. Alternatively, a testing machine may be used in which the counterforce is measured after prescribed time-intervals on test specimens, compressed in a suitable jig, by applying a slight increase in the compression of the test specimen. This additional compression shall be as small as possible and in no case more than a force of 1N or half percent ($\frac{1}{2}$ %) of original load for balance type machine and 0.1 mm (0.004 in) or 2 % of original deflection for stress-strain type machines, in a time not greater than 30 s after commencing the additional compression.

6.5 *Oven,* with temperature control to maintain the specified temperature within the prescribed tolerances. Satisfactory circulation of the air shall be maintained by means of a fan (see Test Method D573 or Specification E145).

6.6 *Temperature reading device (optional),* with for example a thermocouple as the sensing element, mounted in a central position in the oven.

7. Test Specimen

7.1 *Type of Test Specimen*—The test specimen shall be one of the following:

7.1.1 A cylindrical disc of diameter 13.0 ± 0.5 mm (0.512 ± 0.020 in) and thickness 6.3 ± 0.3 mm (0.248 ± 0.012 in).

7.1.2 Cylindrical disc of diameter 29.0 ± 0.5 mm (1.142 ± 0.020 in) and thickness 12.5 ± 0.5 mm (0.492 ± 0.020 in).

7.1.3 Washer of 12.5 ± 0.5 mm (0.492 ± 0.020 in) inside diameter and 19.0 ± 0.5 mm (0.748 ± 0.020 in) outside diameter with 2.0 ± 0.2 mm (0.080 ± 0.008 in) thickness. Within the sample test specimens, thickness variation shall be within 0.025 mm (0.001 in).

7.1.4 Other test specimen sizes may be used as dictated by end use.

7.2 The first three test specimens described above were evaluated in interlaboratory testing. The washer type test specimen (7.1.3) is preferred.

7.3 *Preparation of Test Specimens*—Test specimens may be prepared by taking a sample of the compound or material of interest. If this is a compound it shall be cured and molded in accordance with Practice D3182, or prepared by cutting from molded sheets. Cutting is carried out by means of a sharp, rotating, circular die or revolving knife, lubricated with soapy water, and brought carefully into contact with the rubber. Alternatively, the die or knife is kept stationary and the rubber rotated against it. The rubber is mounted on suitable backing material and the cutting pressure is kept small enough to avoid "cupping" of the cut surface.

7.4 Due to shape factor effect, equivalent results may not be obtained for the different test specimen shapes described above.

7.5 *Number of Test Specimens*—At least three test specimens shall be used for each test.

7.6 *Time-Interval Between Vulcanization and Testing*—The time-interval between vulcanization and testing shall be at least 24 h at ambient conditions.

8. Procedure

8.1 Carefully clean the operating surfaces of the compression device. The test specimen surface shall be free from mold release agent or dusting powder.

8.2 Measure the thickness of each test specimen at the central portion with an accuracy of 0.01 mm (0.0004 in). The thickness shall be determined according to Practice D3767.

8.3 *Method A*

8.3.1 Preheat the compression device to the test temperature.

8.3.2 Preheat the test specimen to the test temperature in accordance with Practice D1349. A preheating period of 30^{+2}_{-0} min. is recommended.

AVA Documents
Document Sharing Hub

Full document details: ASTM D6147-97(2014)

Item	Description
A	Sample
B	Spacer (Specified by Customer)
C	Nut
D	Flange
E	Pillar
F	Clamp
G	Outer Spring Spacer
H	Spacer
I	Adjusting Screw
J	Contact Housing Assy.
K	Inner Spring Spacer
L	Springs
M	Platen

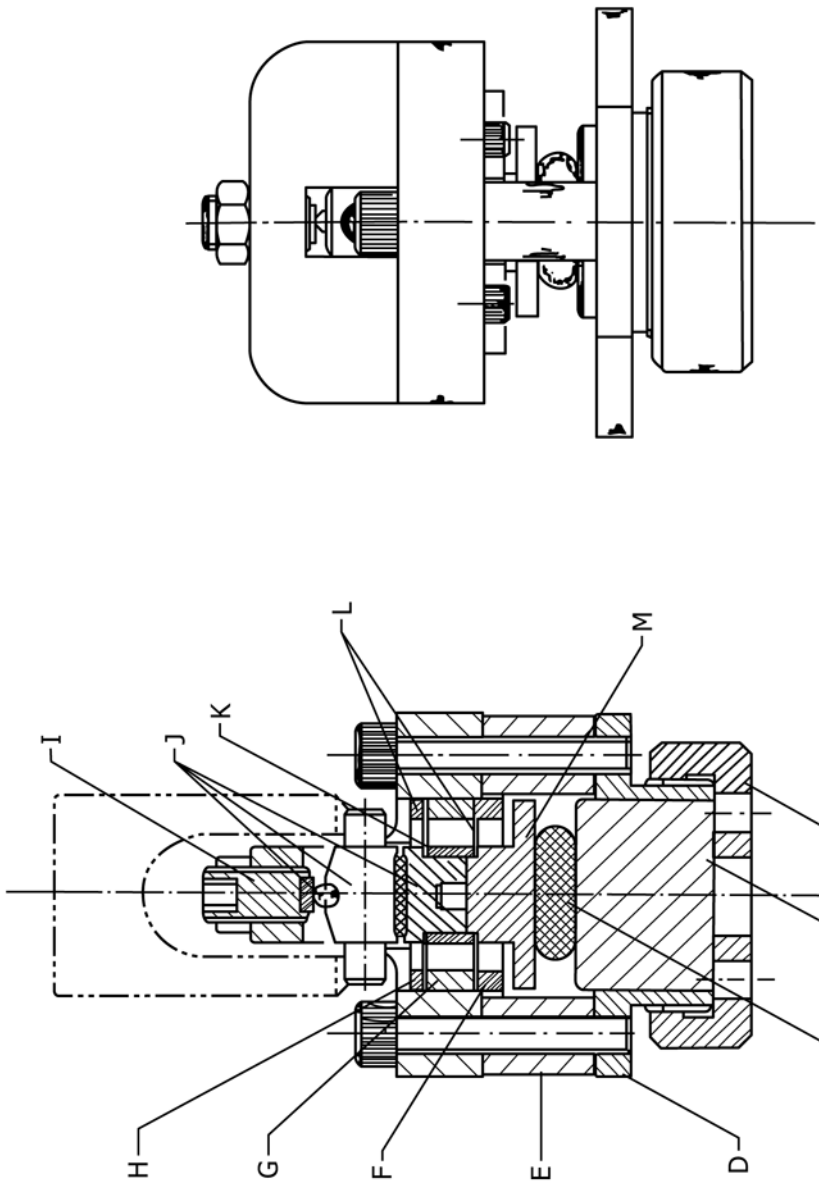

FIG. 1 Shawbury-Wallace Stress Relaxation Fixture

Documents
Document Sharing Hub
Full document details: ASTM D6147-97(2014)