NOTICE: This standard has either been superseded and replaced by a new version or withdrawn.
Contact ASTM International (www.astm.org) for the latest information

Designation: D6193 – 11

StandardPractice for Stitches and Seams[1]

This standard is issued under the fixed designation D6193; the number immediately following the designation indicates the year of original adoption or, in the case of revision, the year of last revision. A number in parentheses indicates the year of last reapproval. A superscript epsilon (ε) indicates an editorial change since the last revision or reapproval.

This standard has been approved for use by agencies of the U.S. Department of Defense.

1. Scope

1.1 This practice covers the requirements and characteristics of stitches and seams used in the fabrication of sewn items.

1.2 This practice identifies the category, formation, and general purpose for stitch types and seam types used in the fabrication of sewn items.

1.3 Subsequent to a general discussion of stitches and seams that include schematic indices, this practice is comprised of the following sections that are listed in the order in which they appear:

1.3.1 *Section 5*—Classification of Stitch Types for which drawings are shown in Stitch Figs. 1-69,

1.3.2 *Section 6*—Classification of Seam Types for which drawings are shown in Seam Figs. 70-288, and

1.3.3 *Annex A1*—Seam Assembly Recommendations.

1.4 *This standard does not purport to address all of the safety concerns, if any, associated with its use. It is the responsibility of the user of this standard to establish appropriate safety and health practices and determine the applicability of regulatory limitations prior to use.*

2. Referenced Documents

2.1 *ASTM Standards:*[2]

D123 Terminology Relating to Textiles

3. Terminology

3.1 *Definitions:*

3.1.1 *bartack, n*—a reinforcement stitch that effectively minimizes tearing at the ends of critical stress stitchlines.

3.1.1.1 *Discussion*—Examples of critical stress stitchlines include: ends of seams, zippers, pocket flaps, crotch/seat seams, collars, webbing and other components. If the bartacking process exhibits an insufficient number of stitches, improper thread size relationship or shortened bartack stitched length then it will fail under stress. Bartacking, because of the stitch density, can exhibit severe needle-cutting, thus creating a self-destructive characteristic if number of stitches is excessive, or sewing needle or thread size is too large for fabric. Bartacking is specified strictly as a relationship between length, width or throw and total stitches. It does not incorporate stitches per inch as a typical seam may specify.

3.1.1.2 *Discussion*—Counting finished bartack stitches is virtually impossible since the overall process consists of three components. The process begins in a horizontal position to achieve the required length and then forms the familiar zig-zag stitch-line along the horizontal plane including backstitching at both ends to lock in the zig-zag stitches to prevent raveling. The zig-zag stitches criss-cross the initial horizontal stitch line thus virtually hiding the initial stitch line.

3.1.2 *needle damage, n—in sewn fabrics*, the partial or complete yarn severance or fiber fusing caused by a needle passing through a fabric during sewing.

3.1.2.1 *Discussion*—This can also be referred to as needle cuts.

3.1.3 *seam, n*—a line where two or more fabrics are joined, usually near the edge. *See also sewn seam, glued seam, stapled seam, thermally bonded seam.*)

3.1.4 *seam allowance, n—in sewn fabrics*, the distance from the edge of a fabric to the parallel stitch line furthest from that edge.

3.1.5 *seam assembly, n*—the composite structure obtained when fabric(s) are joined by means of a seam.

3.1.6 *seam damage, n— in sewn fabrics*, an adverse change in the physical condition of one or more of the components in a seam which would reduce the seam acceptability such as yarn slippage, needle damage, or fabric rupture.

3.1.7 *seam efficiency, n—in sewn fabrics*, the ratio of seam strength to fabric strength.

3.1.7.1 *Discussion*—For some constructions, yarn strength and stitch type can contribute to a higher seam efficiency value.

3.1.8 *seam slippage, n—in sewn fabrics*, the displacement of the fabric yarn parallel and adjacent to the stitch line.

[1] This practice is under the jurisdiction of ASTM Committee D13 on Textiles and is the direct responsibility of Subcommittee D13.54 on Subassemblies.

Current edition approved Jan. 1, 2011. Published May 2011. Originally approved in 1997. Last previous edition approved in 2009 as D6193 – 09. DOI: 10.1520/D6193-11.

[2] For referenced ASTM standards, visit the ASTM website, www.astm.org, or contact ASTM Customer Service at service@astm.org. For *Annual Book of ASTM Standards* volume information, refer to the standard's Document Summary page on the ASTM website.

Copyright © ASTM International, 100 Barr Harbor Drive, PO Box C700, West Conshohocken, PA 19428-2959. United States

Documents
Document Sharing Hub
Full document details: ASTM D6193-11

TABLE 1 Stitch and Seam Defects

Stitch Defects	*Seam Assembly Defects*
Loose stitches	Puckers
Poorly formed stitches	Twists
Crowded stitches	Plaits
Tight stitches	Undulations
Crooked stitches	Run-off (raised seams)
Skipped stitches	Raw edges exposed (felled seams)

3.1.9 *seam type, n—in sewn fabrics*, an alphanumeric designation relating to the essential characteristics of fabric positioning and rows of stitching in a specified sewn fabric seam.

3.1.10 *sew, v*—to unite or fasten with stitches.

3.1.11 *sewing thread, n*—a flexible, small-diameter yarn or strand, usually treated with a surface coating, lubricant, or both, intended to be used to stitch one or more pieces of material or an object to a material.

3.1.12 *sewn seam, n—in sewn fabrics*, a juncture at which two or more planar structures such as textile fabrics, are joined by sewing, usually near the edge.

3.1.13 *stitch, n—in sewing*, the configuration of the interlacing of sewing thread in a specific repeated unit. (See also *stitching, and stitch type*.)

3.1.14 *stitch density, n—in sewn seams*, the number of stitches per unit length in one row of stitching in the seam.

3.1.14.1 *Discussion*—This is usually expressed as stitches per inch (spi).

3.1.15 *stitch gage, n— in sewn seams*, the perpendicular distance between adjacent parallel rows of stitching.

3.1.16 *stitch type, n— in sewn seams*, a numerical designation relating to the essential characteristics of the interlacing of sewing thread(s) in a specified stitch.

3.1.17 *stitching, n*—a series of stitches embodied in a material or materials of planar structure such as woven textile fabrics usually for ornamental purposes or finishing an edge, or both.

3.1.18 *yarn slippage, n—in sewn seams in sewn fabrics*, the displacement of one or more yarns from the original position, causing differences in alignment, spacing, or both.

3.2 For definitions of other textile terms used in this practice, refer to Terminology D123.

4. Significance and Use

4.1 Seam engineering, the determination of the best stitch type, seam configuration, and thread type which should be used for a particular assembly, requires a thorough knowledge of many variables. The improper selection of any one component can result in failure of the sewn junction, and ultimately failure of the product manufactured.

4.2 *General Characteristics*—The characteristics of a properly constructed sewn seam are strength, elasticity, durability, security, and appearance. These characteristics must be balanced with the properties of the material to be joined to form the optimum sewn seam. The end use of the item will govern the relative importance of these characteristics. The selection of the seam type and stitch type should be based upon these considerations.

4.2.1 *Strength*—The seam efficiency of the sewn seam should be as high as possible. This will produce sewn seam strength with a balanced construction that will withstand the forces encountered in the use of the sewn item. The elements affecting the strength of a sewn seam are:

4.2.1.1 Fabric type and strength,
4.2.1.2 Seam type,
4.2.1.3 Stitch type,
4.2.1.4 Stitch density (spi),
4.2.1.5 Thread tension, and
4.2.1.6 Thread strength.

4.2.2 *Elasticity*—The elasticity of a sewn seam should be slightly greater than that of the material which it joins. This will enable the material to support its share of the forces encountered for the intended end use of the sewn item. The elasticity of a sewn seam depends upon:

4.2.2.1 Fabric type and strength,
4.2.2.2 Seam type,
4.2.2.3 Stitch type,
4.2.2.4 Stitch density (spi),
4.2.2.5 Thread tension, and
4.2.2.6 Thread elasticity.

4.2.3 *Durability*—The durability of a sewn seam depends largely upon its strength relative to the elasticity of the seam and the elasticity of the material. However, in less elastic, tightly woven or dense materials, there is a tendency for the plies to "work" or slide on each other. To form a durable sewn seam in these types of fabrics, the thread size must be carefully chosen. The stitch density also needs to be carefully determined for the material so as not to cause excess tension which will unbalance the elasticity and cause puckering. It is also important to minimize abrasion and wear by contact with outside agencies to promote durability.

4.2.4 *Security*—The security of a sewn seam depends chiefly upon the stitch type, spi, and its susceptibility to become unraveled. The stitch must be well set to the material to prevent snagging that can cause rupture of the thread and unraveling of certain stitch types.

4.2.5 *Appearance*—The appearance of a sewn seam generally is governed by the proper relationship between the size and type of thread, the stitch density, and the texture and weight of the fabric.

4.2.5.1 In addition to these general characteristics, the technique and skill of the sewing machine operators also govern the appearance of the sewn seams. Some of the factors which will adversely affect the appearance are shown in Table 1.

5. Classification of Stitch Types

5.1 *Function*—Because all stitch types require that a needle penetrate a fabric while transporting a sewing thread, it is important to understand how the unique characteristics of every stitch type are dependent upon the mechanical actions of the sewing machine. See Stitch Type Figs. 1-66.

5.2 *Stitch Requirements:*

AVA Documents
Document Sharing Hub

Full document details: ASTM D6193-11

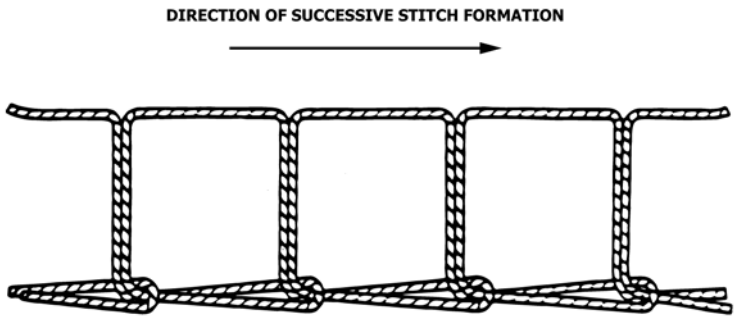

NOTE 1—This type of stitch shall be formed with one needle thread that shall be passed through the material and interlooped with itself on the undersurface of the material.

FIG. 1 Stitch Type 101

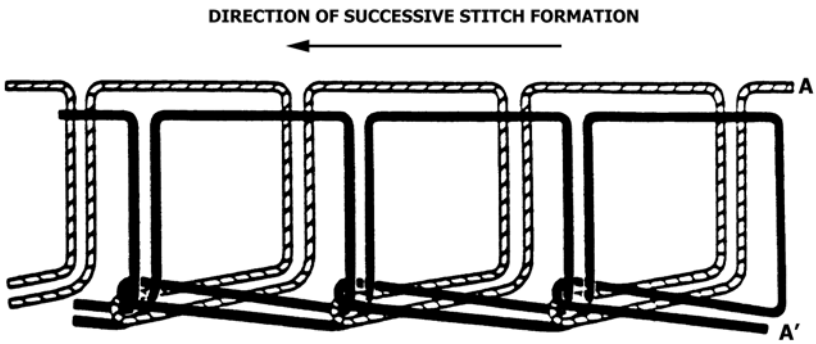

NOTE 1—This type of stitch shall be formed with two needle threads A and A'. Both threads shall be passed through the material and thread A' shall be interlooped with itself and with thread A.

FIG. 2 Stitch Type 102

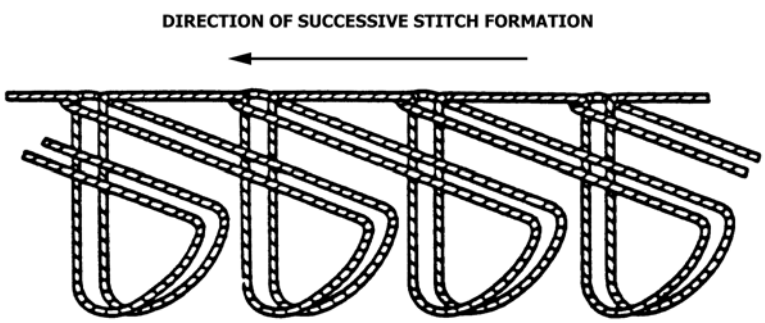

NOTE 1—This type of stitch shall be formed with one needle thread, which shall interloop with itself on the top surface of the material. The thread shall be passed through the top ply and horizontally through portions of the bottom ply without penetrating it the full depth.

FIG. 3 Stitch Type 103

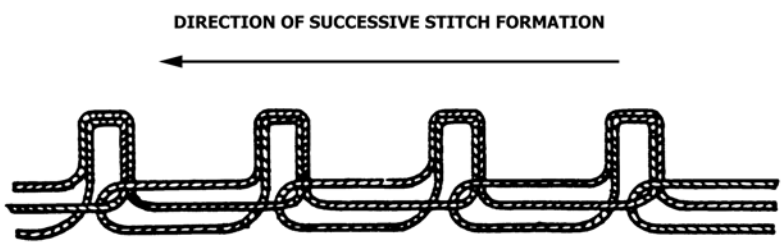

NOTE 1—This type of stitch shall be formed with one needle thread which shall interloop with itself on the undersurface of the material.

FIG. 4 Stitch Type 104

5.2.1 Stitches are divided into six classes which are identified by the first digit of three digit numerals. Each class is divided into several types which are identified by the second

Documents
Document Sharing Hub

Full document details: ASTM D6193-11

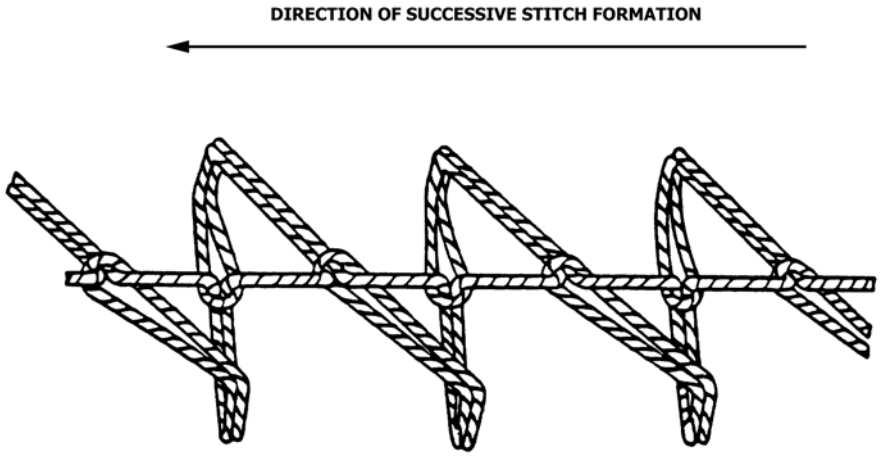

NOTE 1—This type of stitch shall be formed with one needle thread which shall be passed through the top ply of material and through portions of the bottom ply without penetrating it the full depth, on either side of a center line. The thread shall interloop with itself on the surface of the material at the center line.

FIG. 5 Stitch Type 105

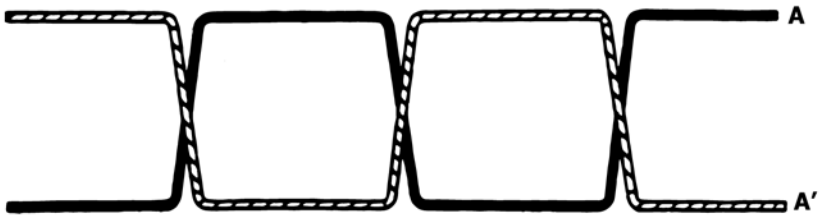

NOTE 1—This type of stitch shall be formed with two needle threads, A and A', which shall be passed through the material in the same perforations from opposite directions without interlacing or interlooping.

FIG. 6 Stitch Type 201

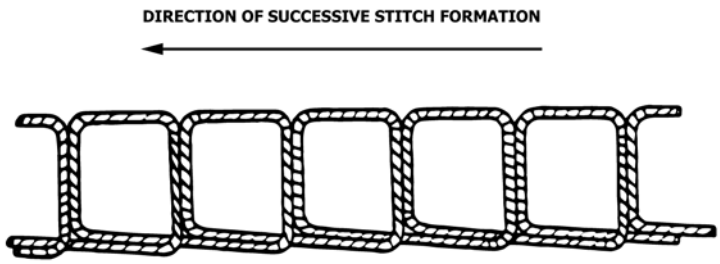

NOTE 1—This type of stitch shall be formed with one needle thread, which shall be passed through the material brought forward two stitch lengths, passed back through the material and brought back one stitch length before being passed through the material a third time.

FIG. 7 Stitch Type 202

and third digit. All stitch types shall conform to the drawings unless otherwise specified.

5.2.1.1 *Stitch Class 100*—This class of stitch (Types 101 through 105) is formed with one or more needle threads and requires interlooping. A loop (or loops) of thread(s) shall be passed through the material and be secured by interlooping with succeeding loop or loops, after they are passed through the material, to form a stitch.

5.2.1.2 *Stitch Class 200*—This class of stitch (Types 201 through 205) is formed by hand with one or more needle threads and requires that each thread passes through the material as a single line of thread. Each stitch is secured by the single line of thread passing in and out of the material or the interlooping of the threads with themselves. When more than one thread is used, the threads pass through the same perforations in the material.

5.2.1.3 *Stitch Class 300*—This class of stitch (Types 301 through 316) is formed with two or more groups of threads and requires the interlacing of the two groups. Loops of the first group are passed through the material where they are secured by the thread(s) of the second group to form a stitch.

5.2.1.4 *Stitch Class 400*—This class of stitch (Types 401 through 407) shall be formed with two or more groups of threads and requires the interlacing and interlooping of the loops of the two groups. Loops of the first group of threads are

AVA Documents
Document Sharing Hub

Full document details: ASTM D6193-11

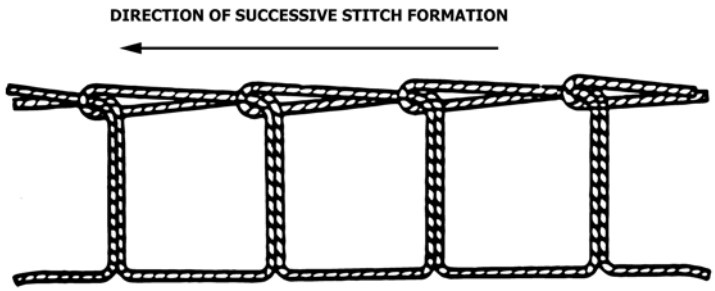

NOTE 1—This type of stitch shall be formed with one needle thread, which shall be passed through the material from the underside and immediately passed back through the same perforation to form a loop on the surface of the material. The needle shall be advanced one stitch length, passed through the material and the loop and immediately passed back through the loop and the same needle perforation, and a new loop shall be formed to receive the succeeding stitch.

FIG. 8 Stitch Type 203

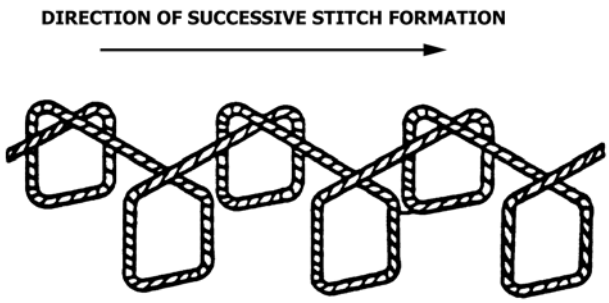

NOTE 1—This type of stitch shall be formed with one needle thread, which shall be passed through the material and brought back one stitch length and then passed back up through the material. The needle shall be moved diagonally across the material and forward one stitch length, passed through the material, brought back one stitch length and again passed to the surface of the material. This process shall be repeated to form a crisscross pattern of stitches on the surface and parallel rows of separated and off-set stitches on the underside of the material.

FIG. 9 Stitch Type 204

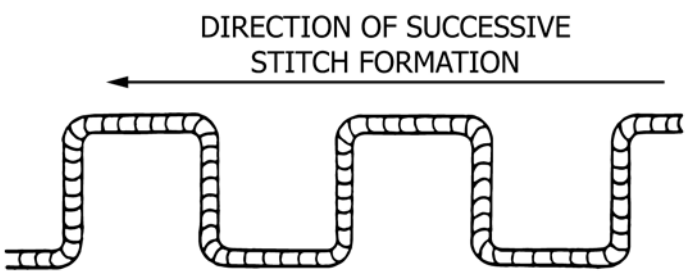

NOTE 1—This type of stitch shall be formed with one or more needle threads and has for a general characteristic that the thread does not interloop with itself or any other thread or threads. The thread is passed completely through the material by means of a double pointed center eye needle and returned by another path. This class of stitch simulates hand stitching.

FIG. 10 Stitch Type 205

passed through the material and are secured by interlacing and interlooping with loops of the second group to form a stitch.

5.2.1.5 *Stitch Class 500*—This class of stitch (Types 501 through 522) is formed with one or more groups of thread, and requires that loops from at least one group of thread shall pass around the edge of the material. Loops of one group of thread are passed through the material and are secured by interlooping with themselves before succeeding loops are passed through the material, or secured by interlooping with loops of one or more interlooped groups of threads before succeeding loops of the first group are again passed through the material.

5.2.1.6 *Stitch Class 600*—This class of stitch (Types 601 through 607) is formed with two or more groups of threads, and requires that two of the groups cover the raw edges of both surfaces of the material. Loops of the first group of thread are passed through loops of the third group already cast on the surface of the material and then through the material where they are interlooped with loops of the second group of thread on the underside of the material. The one exception to this procedure is stitch type 601 where only two groups of thread are used and the function of the third group is performed by one of the threads in the first group.

6. Classification of Seam Types

6.1 *Function:*

6.1.1 Seam classification relates directly to the positioning of fabric sections at the junction where these sections are seam.

AVA Documents
Document Sharing Hub

Full document details: ASTM D6193-11

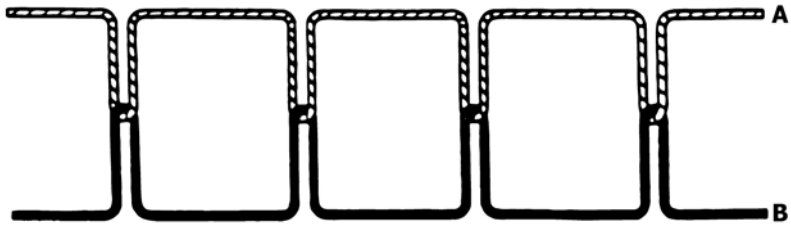

NOTE 1—This type of stitch shall be formed with two threads: one needle thread, A, and one bobbin thread, B. A loop of thread A shall be passed through the material and interlaced with thread B. Thread A shall be pulled back so that the interlacing shall be midway between surfaces of the material or materials being sewn.

FIG. 11 Stitch Type 301

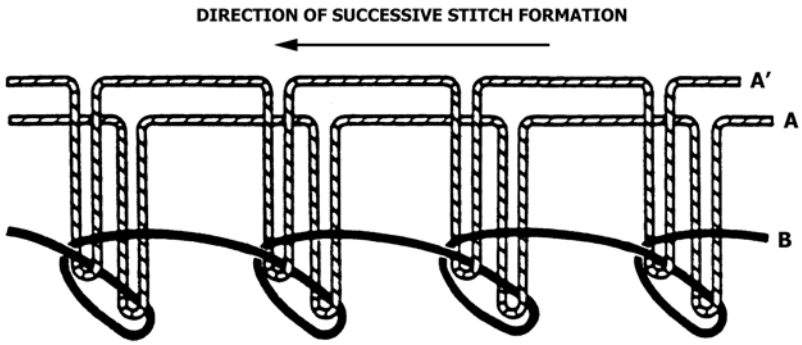

NOTE 1—This type of stitch shall be formed with three threads: two needle threads, A and A', and one bobbin thread, B. Loops of threads A and A' shall be passed through the material and interlaced with thread B. The interlacings shall be on the underside of the material.

FIG. 12 Stitch Type 302

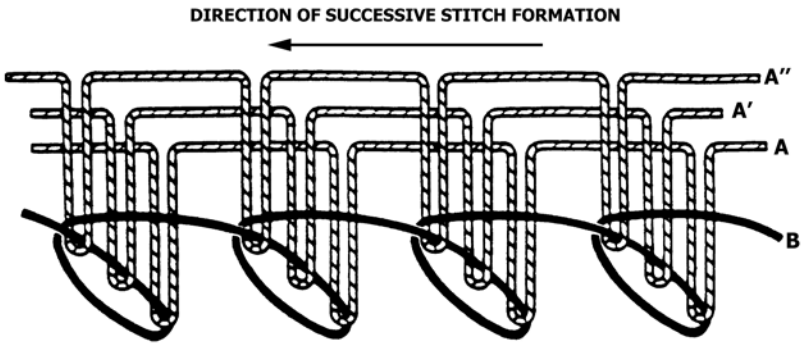

NOTE 1—This type of stitch shall be formed with four threads: three needle threads, A and A' and A", and one bobbin thread, B. Loops of threads A, A' and A" shall be passed through the material and interlaced with thread B. The interlacings shall be on the underside of the material.

FIG. 13 Stitch Type 303

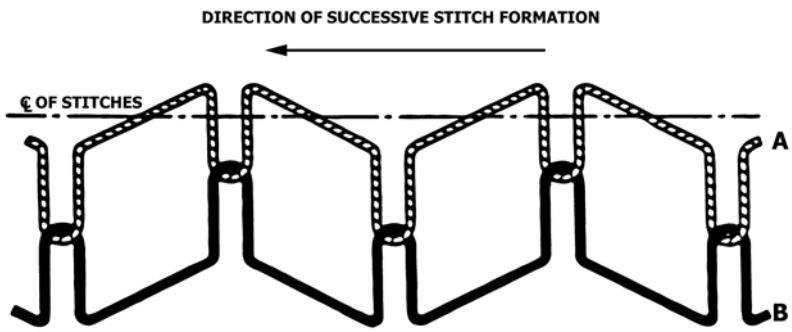

NOTE 1—This type of stitch shall be formed with two threads: one needle thread, A, and one bobbin thread, B. This stitch type is exactly the same as stitch type 301 except that successive single stitches form a symmetrical zigzag pattern.

FIG. 14 Stitch Type 304

AVA Documents
Document Sharing Hub

Full document details: ASTM D6193-11

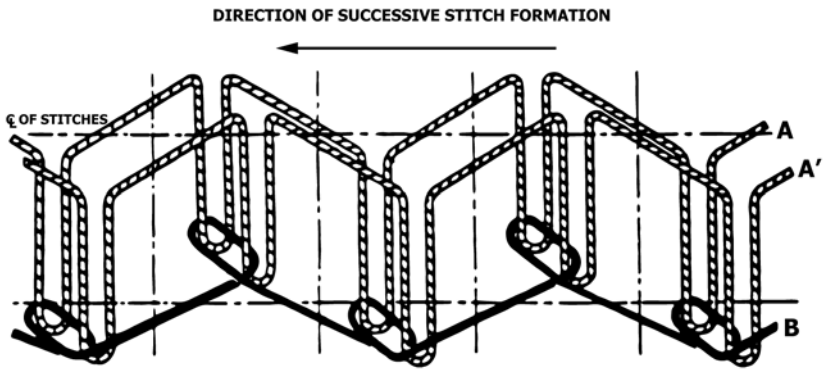

NOTE 1—This type of stitch shall be formed with three threads: two needle threads, A and A', and one bobbin thread, B. Loops of threads A and A' shall be passed through the material and interlaced with thread B and the interlacing shall be left on the underside of the material. Successive single stitches form a symmetrical zigzag pattern.

FIG. 15 Stitch Type 305

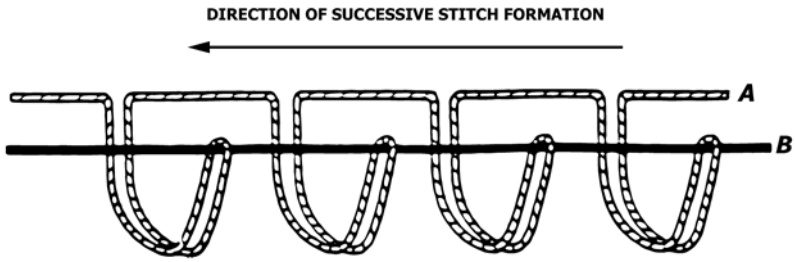

NOTE 1—This type of stitch shall be formed with two threads: one needle thread, A, and one bobbin thread, B. Loops of thread A shall be passed through the top ply of material and horizontally through portions of the bottom ply without penetrating it the full depth and shall be interlaced with thread B on the top surface of the bottom ply of material.

FIG. 16 Stitch Type 306

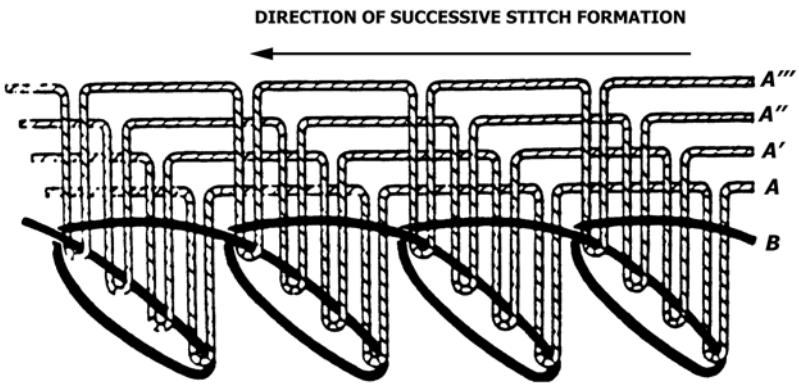

NOTE 1—This type of stitch shall be formed with five threads: four needle threads, A, A', A", A'", and one bobbin thread, B. Loops of threads A, A', A", A'", shall be passed through the material and interlaced with thread B. The interlacings shall be on the underside of the material.

FIG. 17 Stitch Type 307

6.1.2 All seam types are classified by an alphabetical designation. See Figs 282–291.

6.1.3 Seams are divided into six classes. Each class is subdivided into types and are designated by symbols as follows:

6.1.3.1 *Class of Seam*—Two or more upper case letters.

6.1.3.2 *Types of the Class*—One or more lower case letters.

6.1.3.3 *Number of Rows of Stitches*—One or more Arabic numerals. *Example*—The symbol for a simple super-imposed seam type with one row of stitches is: SSa-1.

6.1.3.4 Generally, most seam types can be produced using multiple rows of stitching. The symbol for the seam type will change with the number of rows of stitches: SSa-2, SSa-3, SSa-4, etc.

AVA Documents
Document Sharing Hub

Full document details: ASTM D6193-11

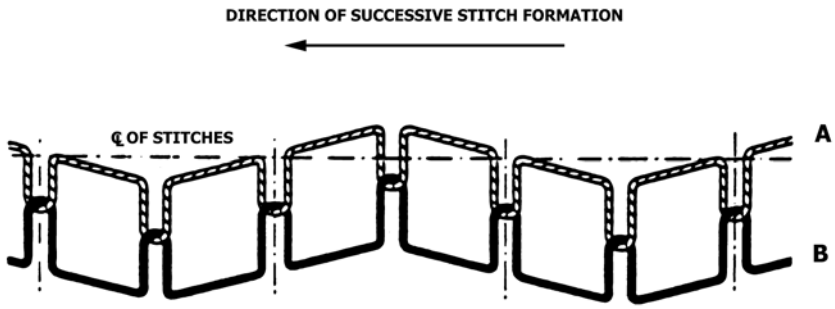

NOTE 1—This type of stitch shall be formed with two threads: one needle thread, A, and one bobbin thread, B. This stitch type is the same as stitch type 304 except that successive pairs of stitches form a symmetrical zigzag pattern.

FIG. 18 Stitch Type 308

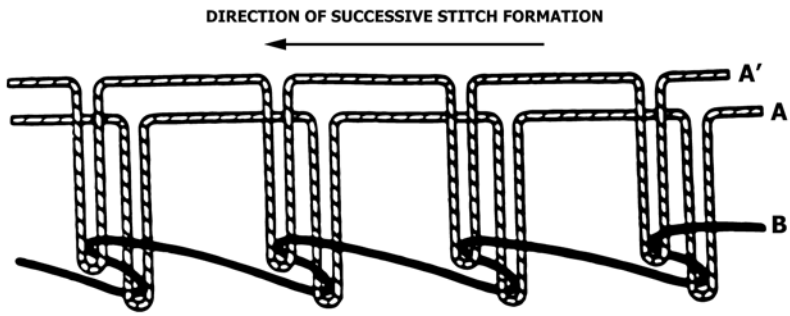

NOTE 1—This type of stitch shall be formed with three threads: two needle threads, A and A', and one bobbin thread, B. Loops of threads A and A' shall be passed through the material and interlaced with thread B. The interlacings shall be left on the underside of the material.

FIG. 19 Stitch Type 309

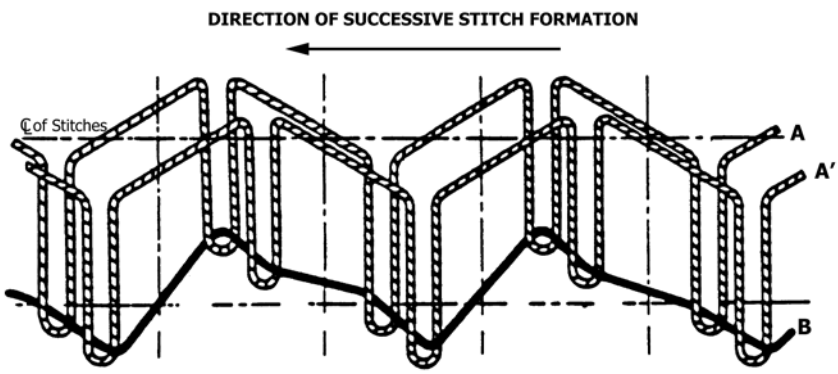

NOTE 1—This type of stitch shall be formed with three threads: two needle threads, A and A', and one bobbin thread, B. Loops of threads A and A' shall be passed through the material and interlaced with thread B, and the interlacings shall be left on the underside of the material. Successive single stitches form a symmetrical zigzag pattern.

FIG. 20 Stitch Type 310

6.2 *Seam Requirements:*

6.2.1 All seam types shall conform to the applicable drawings unless otherwise specified. See Seam Figs. 70-288.

6.2.1.1 *Seam Class SS*—This class of seam requires that the plies of material are superimposed and seamed with one or more rows of stitches (Figs. 289-298).

6.2.1.2 *Seam Class LS*—This class of seam requires that the plies of material are lapped and seamed with one or more rows of stitches.

6.2.1.3 *Seam Class BS*—This class of seam is formed by folding a binding strip over the edge of one or more plies of material and seaming the binding strip to the material with one or more rows of stitches.

6.2.1.4 *Seam Class FS*—This class of seam is formed by sewing the abutted edges of material together in such a manner that the stitches extend across and cover or tend to cover the edges of the plies joined.

6.2.1.5 *Seam Class OS*—This class of seam requires that a series of stitches are embodied in a material either in a straight line, a curve, or following a design, for ornamental purposes.

6.2.1.6 *Seam Class EF*—This class of seam requires that edge finishing is accomplished by either: sewing a series of stitches at or over the edge of a material while the edge may or may not be folded as specified, or the edge of the material is folded and stitched to the body of the material with a series of stitches.

AVA Documents
Document Sharing Hub

Full document details: ASTM D6193-11

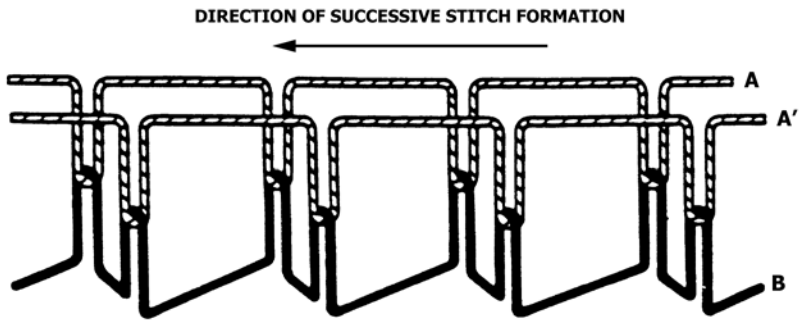

NOTE 1—This type of stitch shall be formed with three threads: two needle threads, A and A', and one bobbin thread, B. Loops of threads A and A' shall be passed through the material and interlaced with thread B. Threads A and A' shall be pulled back so that the interlacings shall be midway between surfaces of the material or materials being sewn.

FIG. 21 Stitch Type 311

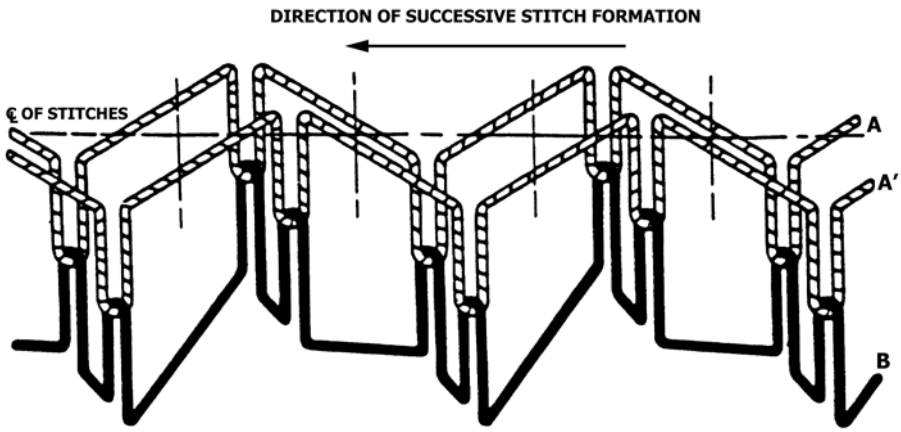

NOTE 1—This type of stitch shall be formed with three threads: two needle threads, A and A', and one bobbin thread, B. This stitch type is exactly the same as stitch type 311 except that successive single stitches form a symmetrical zigzag pattern.

FIG. 22 Stitch Type 312

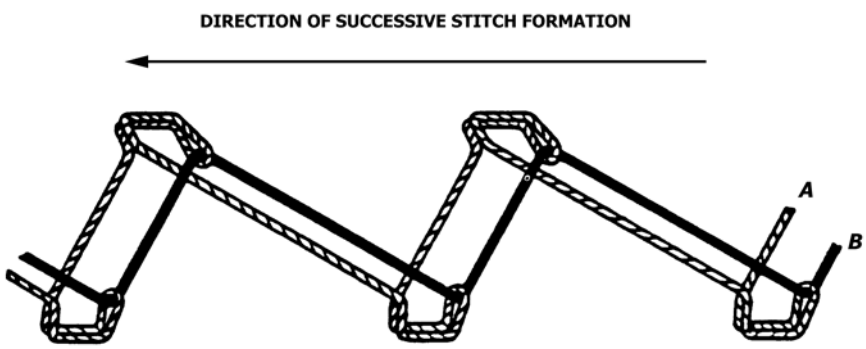

NOTE 1—This type of stitch shall be formed with two threads: one needle thread, A, and one bobbin thread, B. Loops of thread A shall be passed horizontally through portions of both plies of material without penetrating the full depth, and shall be interlaced with thread B on the top of the material.

FIG. 23 Stitch Type 313

AVA Documents
Document Sharing Hub

Full document details: ASTM D6193-11

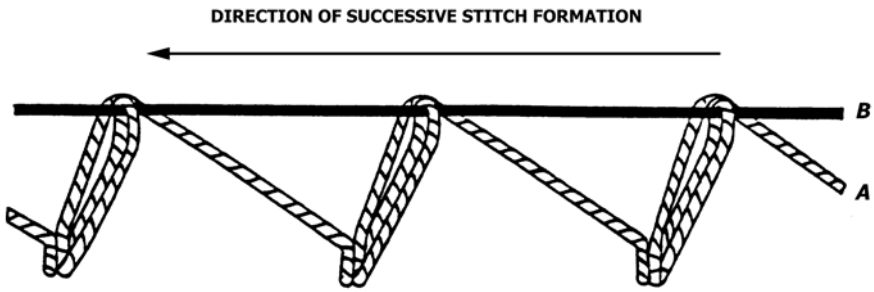

NOTE 1—This type of stitch shall be formed with two threads: one needle thread, A, and one bobbin thread, B. Loops of thread A shall be passed through the top ply of material and horizontally through portions of the bottom ply without penetrating the full depth and shall be interlaced with thread B on the top of the material.

FIG. 24 Stitch Type 314

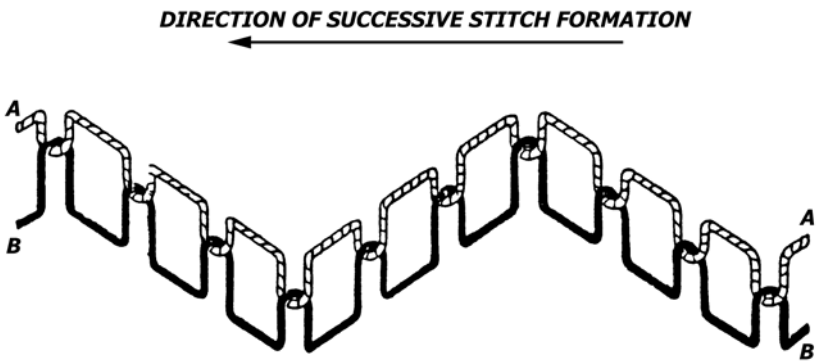

NOTE 1—This type of stitch shall be formed with two threads: one needle thread, A, and one bobbin thread, B. This stitch type is the same as stitch type 304 except that successive groups of three stitches form a symmetrical zig-zag pattern.

FIG. 25 Stitch Type 315

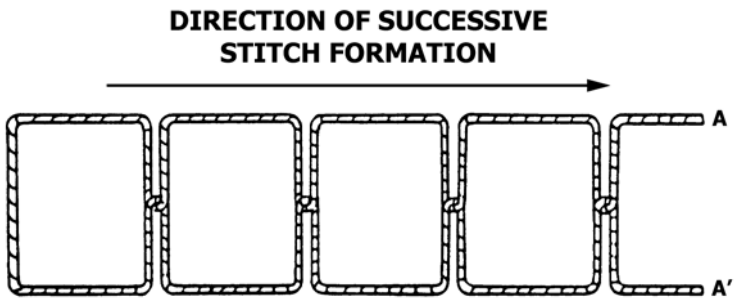

NOTE 1—This type of stitch shall be formed with one continuous needle thread, which after the first needle penetration is divided into two parts: part one, needle thread A, and one reel thread, A'. In subsequent penetrations thread A is passed through the material and interlaced with thread A. Thread A shall be pulled up so that the interlacing is midway between the surfaces of the material or materials being sewn. This stitch type is identical to stitch type 301 except for the initial stitch.

FIG. 26 Stitch Type 316

AVA Documents
Document Sharing Hub

Full document details: ASTM D6193-11

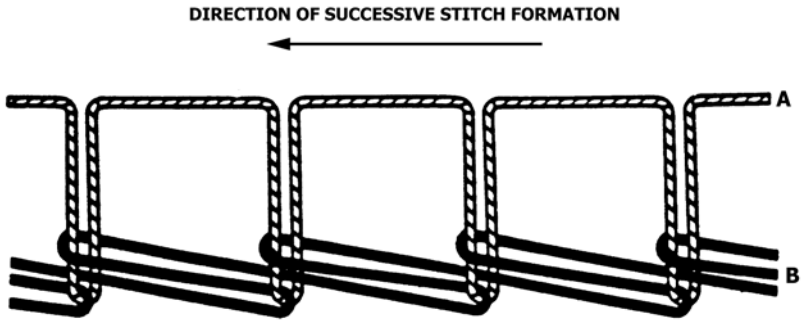

NOTE 1—This type of stitch shall be formed with two threads: one needle thread, A, and one looper thread, B. Loops of thread A shall be passed through the material and interlaced and interlooped with loops of thread B. The interloopings shall be drawn against the underside of the bottom ply of material.

FIG. 27 Stitch Type 401

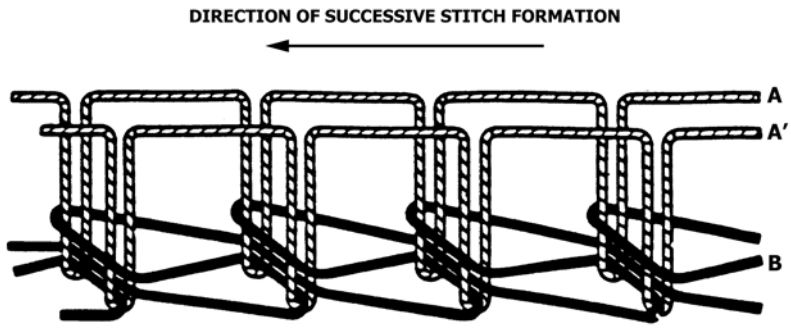

NOTE 1—This type of stitch shall be formed with three threads: two needle threads A and A' and one looper thread, B. Loops of threads A and A' shall be passed through the material and interlaced and interlooped with loops of thread B. The interloopings shall be drawn against the underside of the material.

FIG. 28 Stitch Type 402

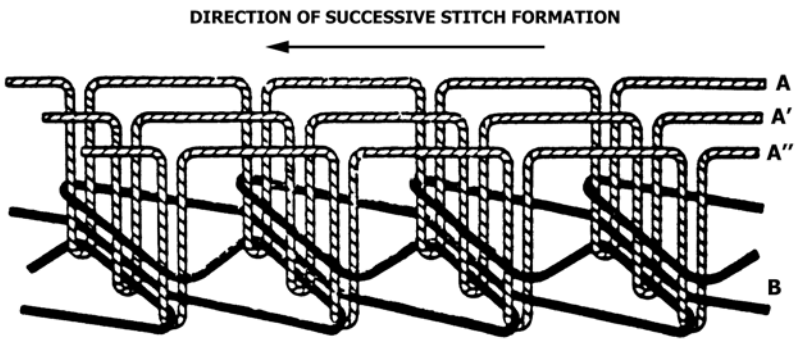

NOTE 1—This type of stitch shall be formed with four threads: three needle threads, A, A' and A" and one looper thread, B. Loops of threads A, A' and A" shall be passed through the material and interlaced and interlooped with loops of thread B. The interloopings shall be drawn against the underside of the material.

FIG. 29 Stitch Type 403

AVA Documents
Document Sharing Hub

Full document details: ASTM D6193-11

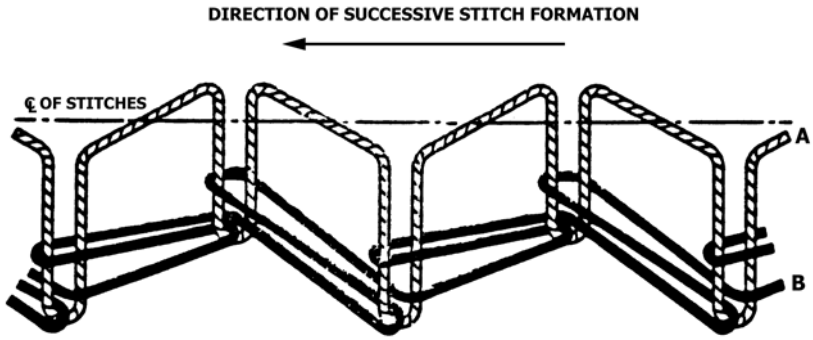

NOTE 1—This type of stitch shall be formed with two threads: one needle thread, A, and one looper thread, B. This stitch is the same as stitch type 401 except that successive single stitches form a symmetrical zigzag pattern.

FIG. 30 Stitch Type 404

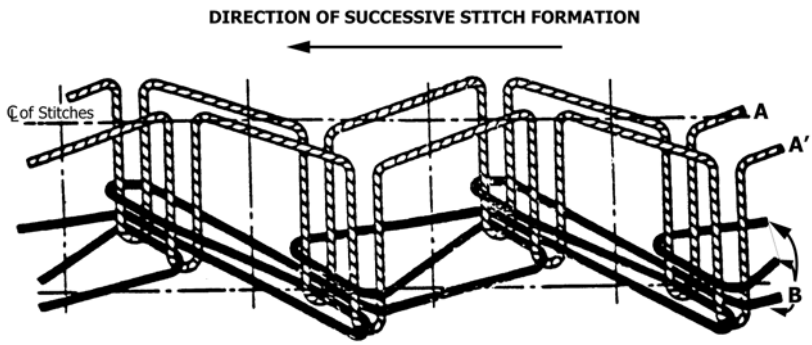

NOTE 1—This type of stitch shall be formed with three threads: two needle threads, A and A', and one looper thread, B. This stitch is the same as stitch type 402 except that successive stitches form a symmetrical zigzag pattern.

FIG. 31 Stitch Type 405

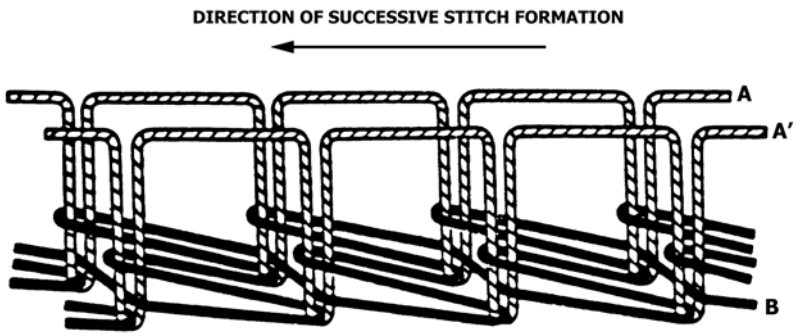

NOTE 1—This type of stitch shall be formed with three threads: two needle threads, A and A' and one looper thread, B. Loops of threads A and A' shall be passed through the material and interlaced and interlooped with loops of thread B. The interloopings shall be drawn against the underside of the material.

FIG. 32 Stitch Type 406

Documents
Document Sharing Hub
Full document details: ASTM D6193-11

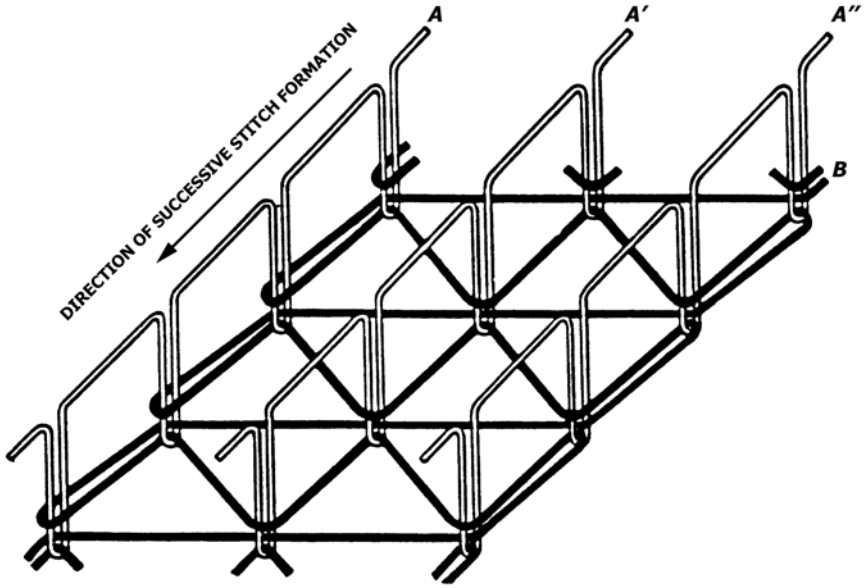

NOTE 1—This type of stitch shall be formed with four threads: three needle threads A, A', and A" and one looper thread, B. Loops of threads A, A', and A" shall be passed through the material and shall be drawn against the underside of the material.

FIG. 33 Stitch Type 407

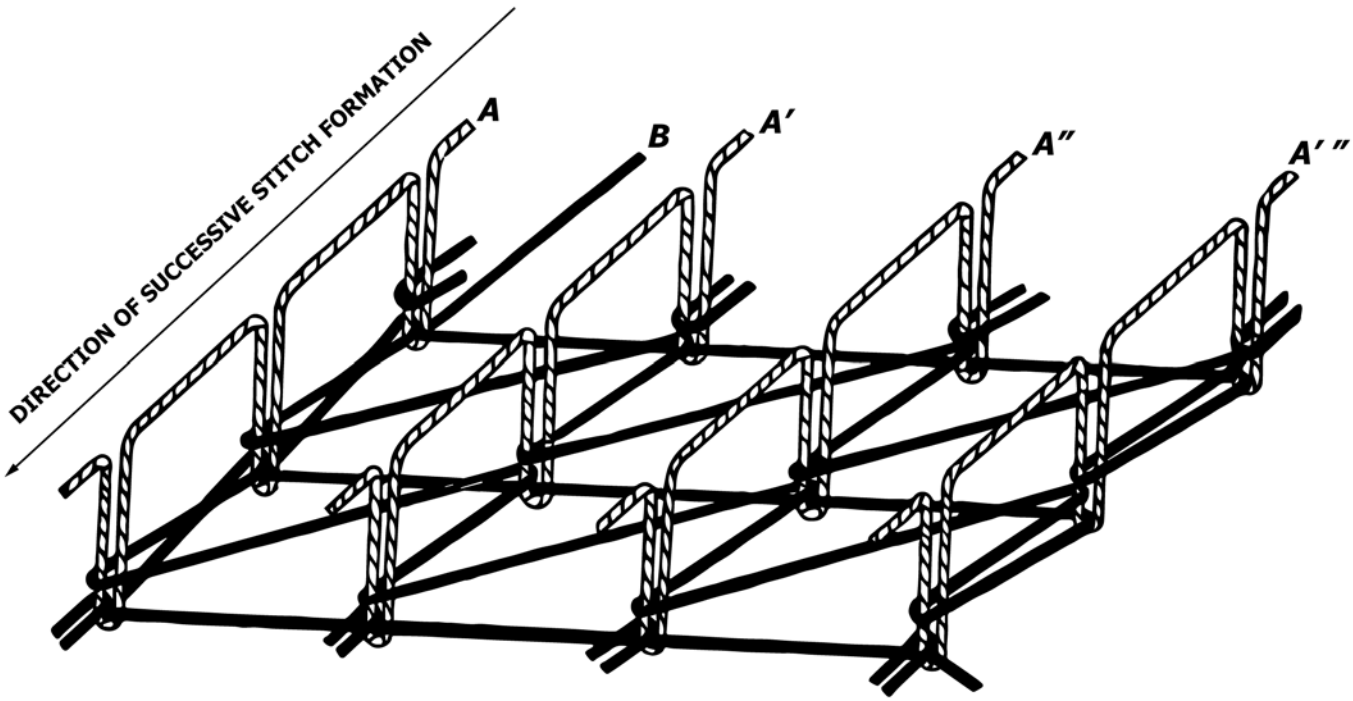

NOTE 1—This type of stitch shall be formed with five threads: four needle threads A, A', A", and A' "; and one looper thread, B. Loops of threads A, A', A" , and A' " shall pass through the material where they shall be interlooped with the loops of thread B on the underside.

FIG. 34 Stitch Type 408

Documents
Document Sharing Hub

Full document details: ASTM D6193-11

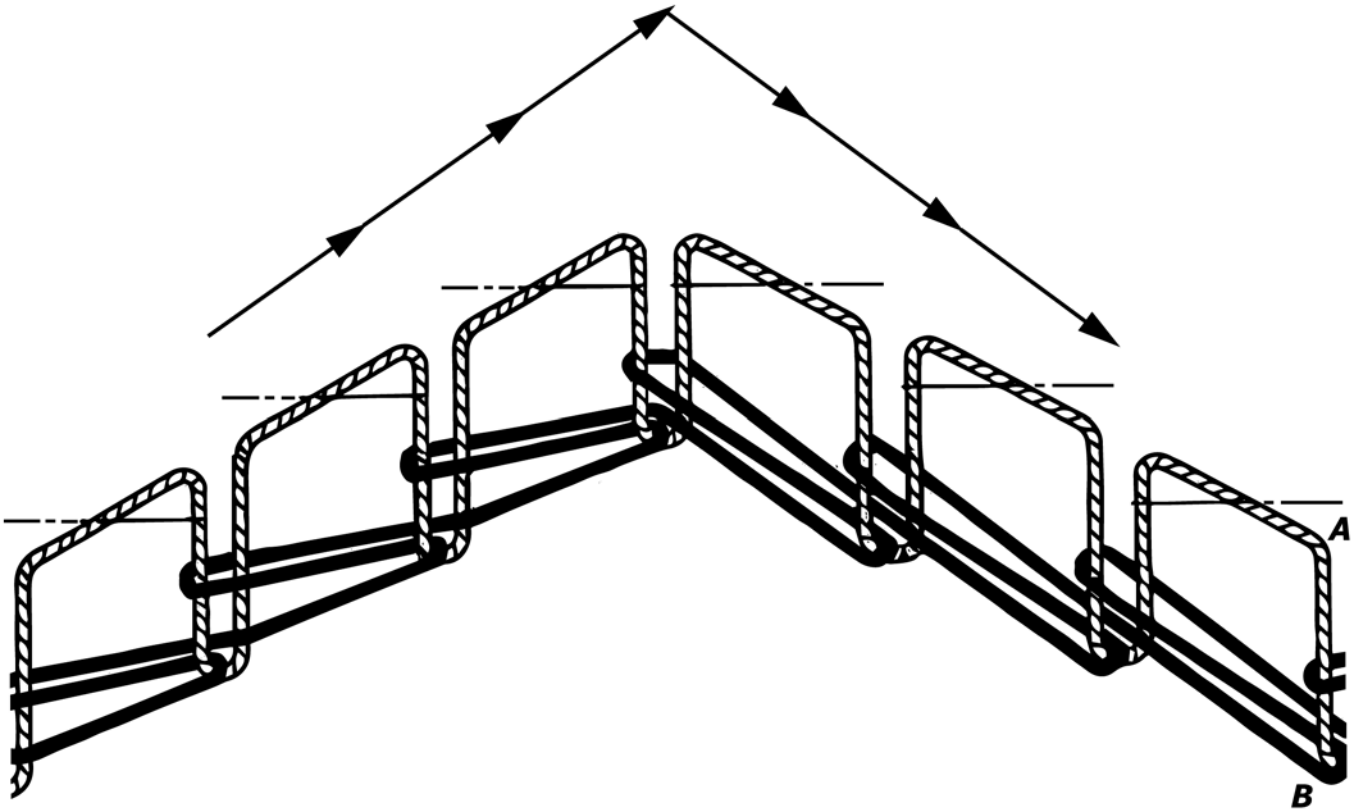

NOTE 1—This type of stitch shall be formed with two threads: one needle threads A, and one looper thread, B. This stitch is the same as stitch type 404, except that successive groups of three stitches form a symmetrical chainstitch zig zag pattern.

FIG. 35 Stitch Type 409

Documents
Document Sharing Hub
Full document details: ASTM D6193-11

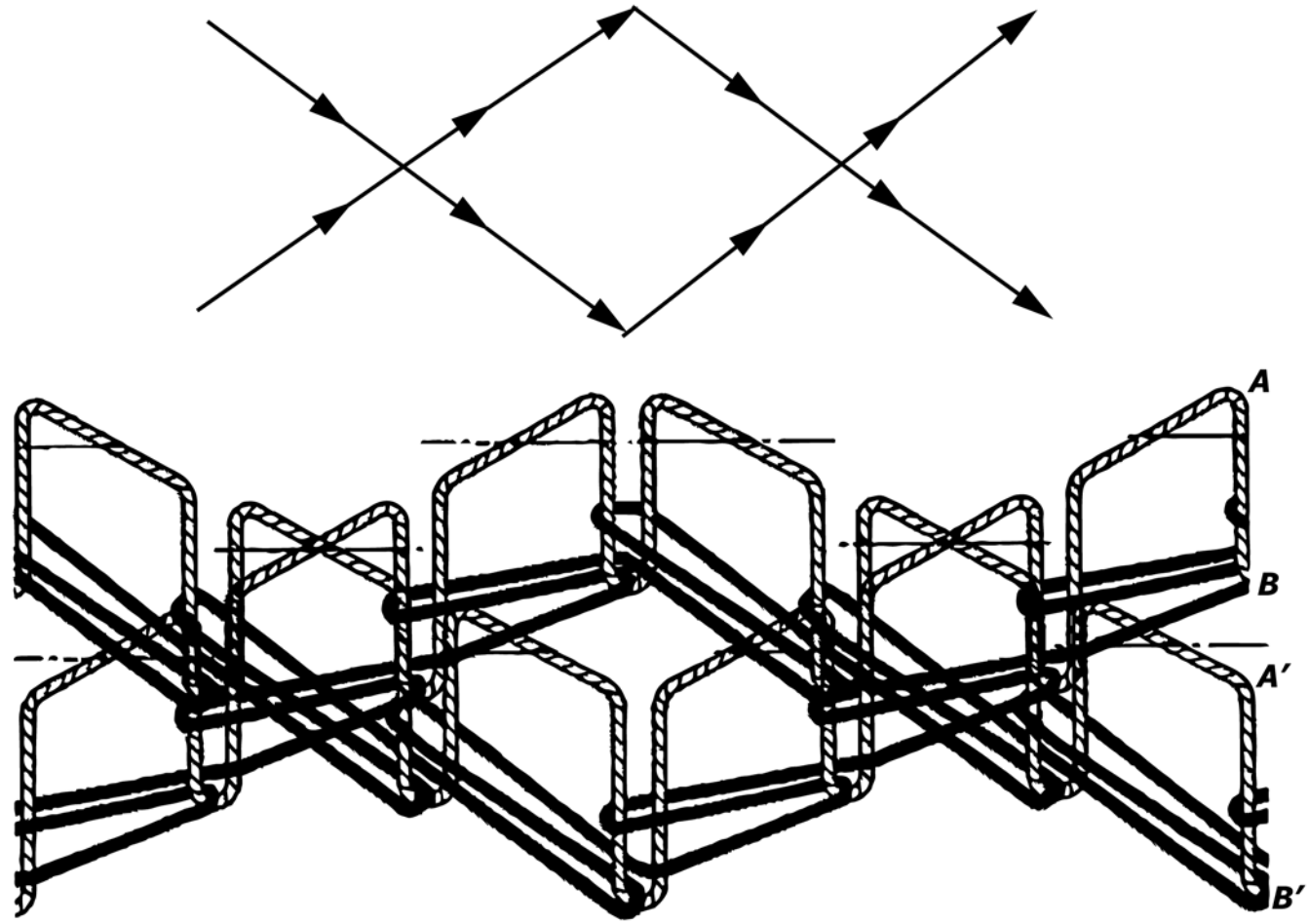

NOTE 1—This type of stitch shall be formed with four threads: two needle threads A, and A', and two looper threads, B and B'. This stitch is the same as stitch type 409 , except two successive groups of three stitches form a symmetrical chainstitch zig zag pattern.

FIG. 36 Stitch Type 410

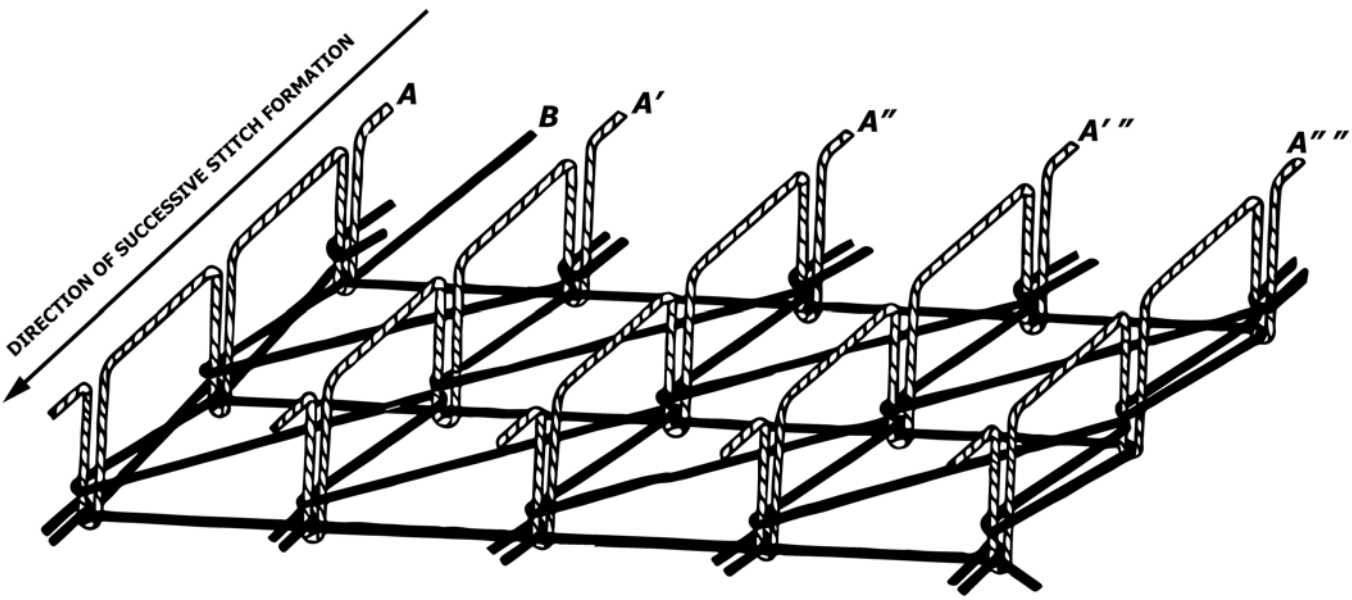

NOTE 1—This type of stitch shall be formed with six threads: five needle threads A, A', A", A' "; and A" "; one looper thread, B. Loops of threads A, A', A", A' "; and A" " shall pass through the material where they shall be interlooped with the loops of thread B on the underside.

FIG. 37 Stitch Type 411

AVA Documents
Document Sharing Hub

Full document details: ASTM D6193-11

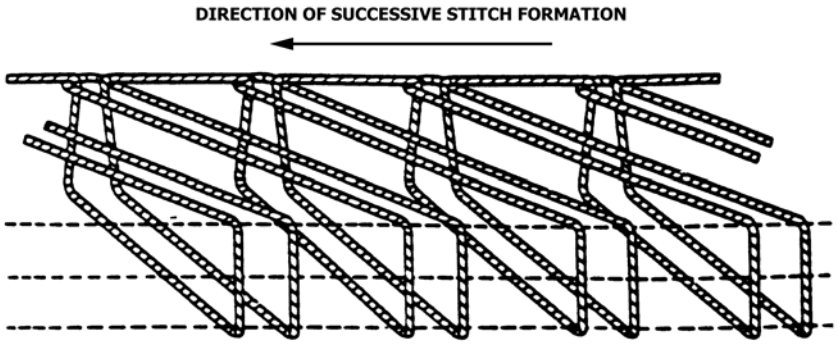

NOTE 1—This type of stitch shall be formed with one needle thread which shall be passed through and around the edge of the material as a loop and interlooped with itself at the point of needle penetration of the stitch on the surface of the material.

FIG. 38 Stitch Type 501

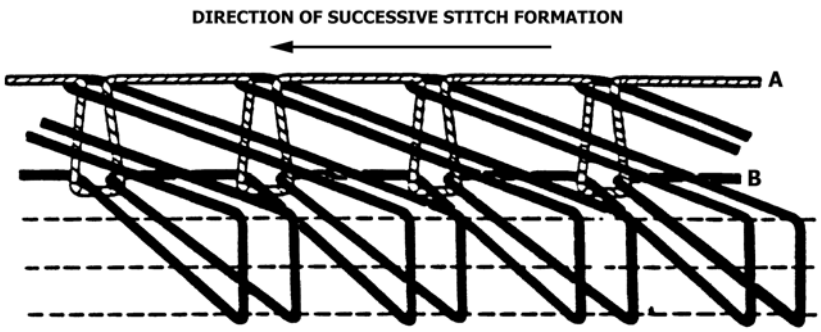

NOTE 1—This type of stitch shall be formed with two threads: one needle thread, A, and one looper thread, B. Loops of thread A shall be passed through the material and interlooped with thread B at the point of penetration on the underside of the material. Loops of thread B shall be brought around the edge of the material and interlooped with thread A at the next stitch on the surface of the material.

FIG. 39 Stitch Type 502

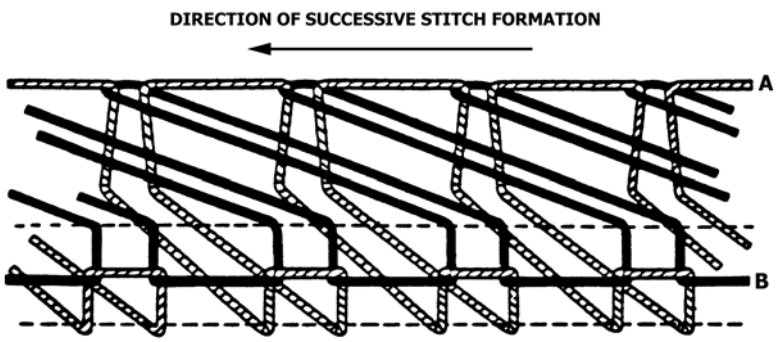

NOTE 1—This type of stitch shall be formed with two threads: one needle thread, A, and one looper thread, B. Loops of thread A shall be passed through the material and brought to the edge where they shall be interlooped with thread B. The loops of thread B shall be extended from this interlooping to the point of needle penetration of the next stitch and there interlooped with thread A.

FIG. 40 Stitch Type 503

AVA Documents
Document Sharing Hub

Full document details: ASTM D6193-11

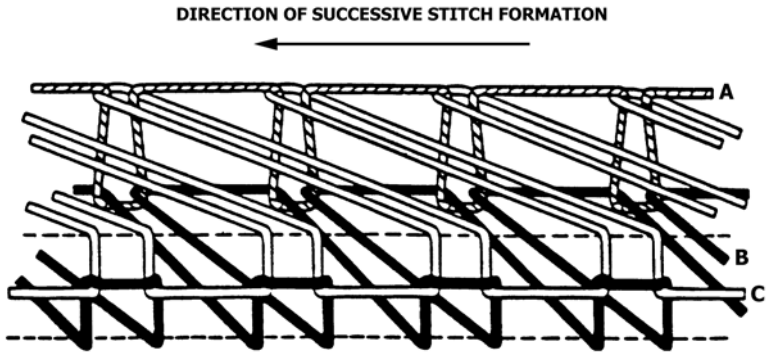

NOTE 1—This type of stitch shall be formed with three threads: one needle thread, A; one looper thread, B; and one cover thread, C. Loops of thread A shall be passed through the material and interlooped with loops of thread B at the point of penetration on the underside of the material. The loops of thread B shall be extended to the edge of the material and there interlooped with loops of thread C. Loops of thread C shall be extended from this interlooping to the point of needle penetration of the next stitch and there interlooped with thread A.

FIG. 41 Stitch Type 504

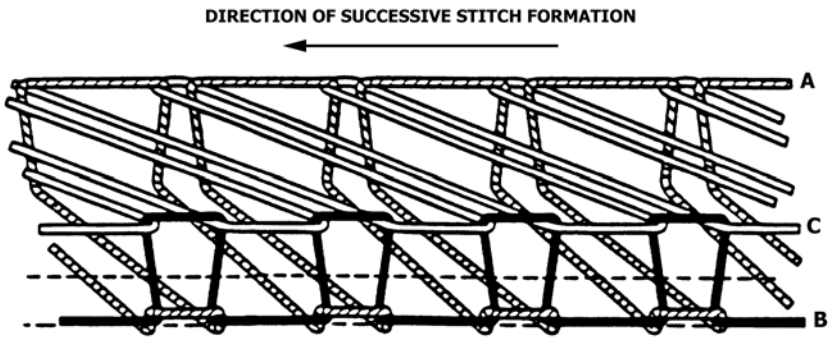

NOTE 1—This type of stitch shall be formed with three threads: one needle thread, A; one looper thread, B; and one cover thread, C. Loops of thread A shall be passed through the material and extended to the edge where they shall be interlooped with loops of thread B. The loops of thread B shall be brought up to the top edge of the material and there interlooped with loops of thread C. The loops of thread C shall be extended to the point of needle penetration of the next stitch and there interlooped with thread A.

FIG. 42 Stitch Type 505

Documents
Document Sharing Hub

Full document details: ASTM D6193-11

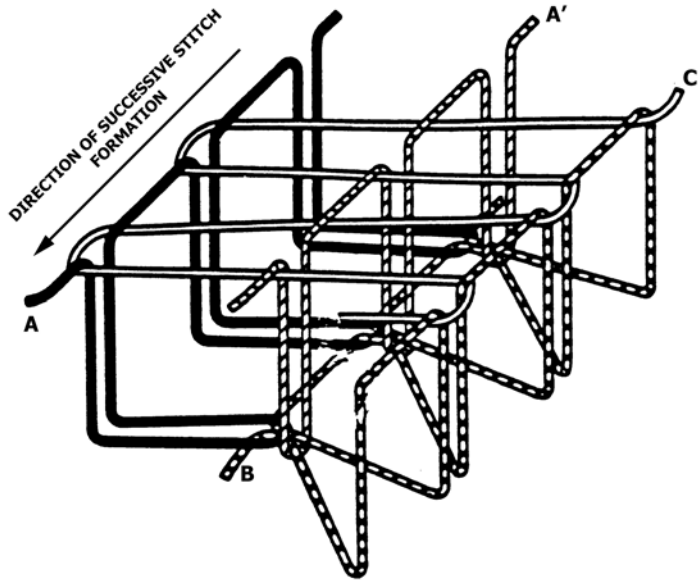

NOTE 1—This type of stitch shall be formed with four threads: two needle threads, A and A'; one looper thread, B; and one cover thread, C. Loops of threads A and A' shall be passed through the material and the loops of thread A shall be extended to the point of needle penetration of the loops of thread A'. Loops of threads A and A' shall be interlooped with loops of thread B at this point. The loops of thread B shall be brought around the edge of the material and interlooped with loops of thread C. The loops of thread C shall be extended to the point of needle penetration of threads A and A', where they shall be entered by the next stitch of those threads.

FIG. 43 Stitch Type 506

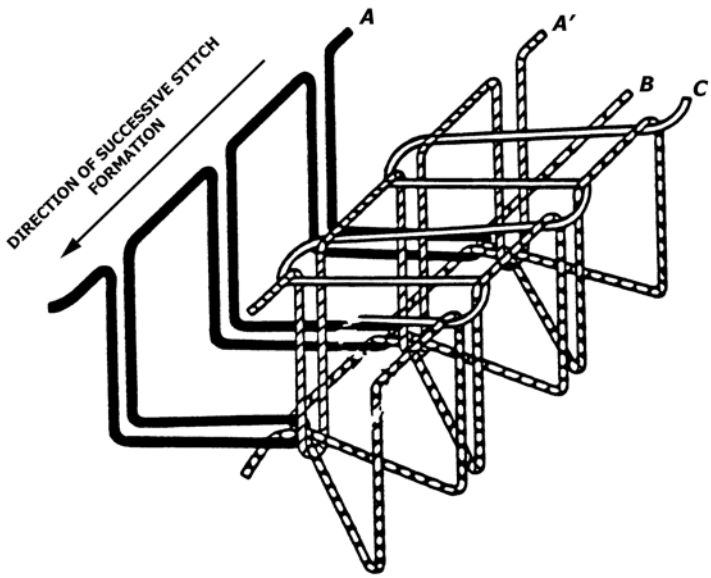

NOTE 1—This type of stitch shall be formed with four threads: two needle threads, A and A'; one looper thread, B; and one cover thread, C. Loops of threads A and A' shall be passed through the material and the loops of thread A shall be extended to the point of needle penetration of the loops of thread A'. Loops of threads A and A' shall be interlooped with loops of thread B at this point. The loops of thread B shall be brought around the edge and interlooped with loops of thread C. The loops of thread C shall be extended to the point of needle penetration of thread A' at the next stitch where they shall be entered by loops of that thread.

FIG. 44 Stitch Type 507

AVA Documents
Document Sharing Hub

Full document details: ASTM D6193-11

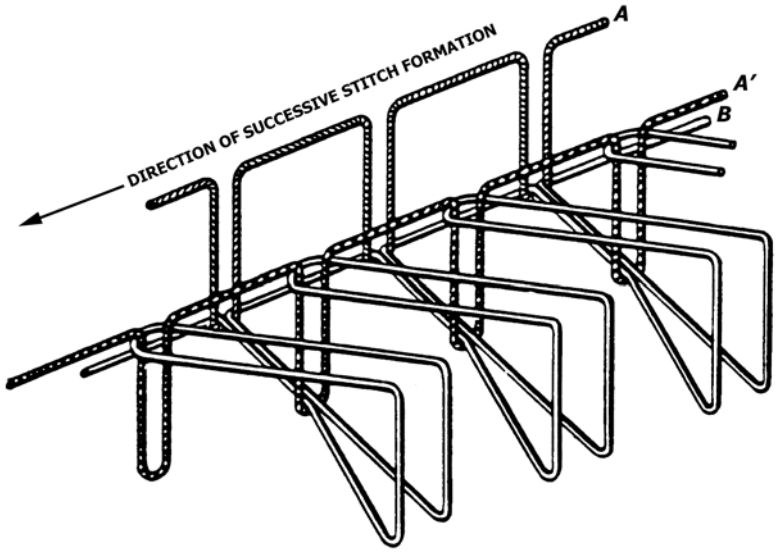

NOTE 1—This type of stitch shall be formed with three threads: two needle threads, A and A', and one looper thread, B. Loops of threads A and A' shall be passed through the material where they shall be interlooped at the lower point of penetration with thread B. Loops of thread B shall be brought around the edge of the material and interlooped with thread A' at the next stitch on the surface of the material.

FIG. 45 Stitch Type 508

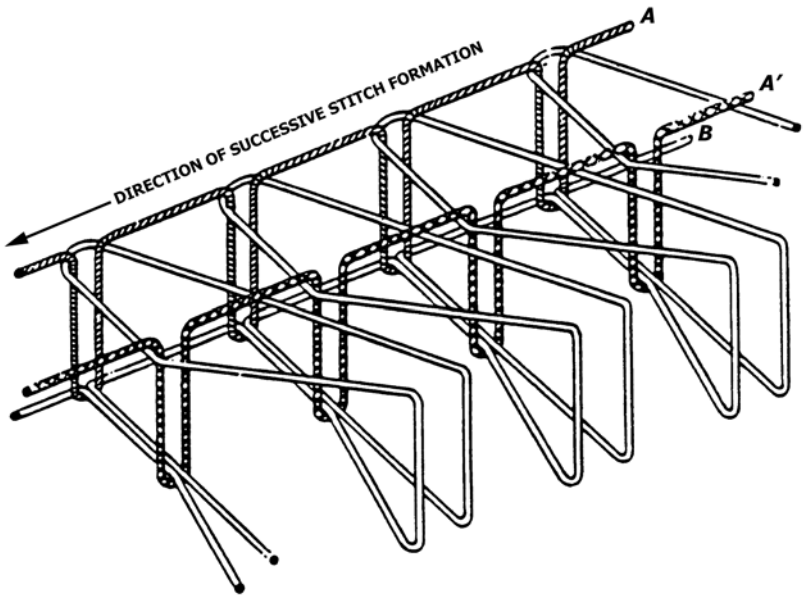

NOTE 1—This type of stitch shall be formed with three threads: two needle threads, A and A', and one looper thread, B. Loops of threads A and A' shall be passed through the material where they shall be interlooped at the lower point of penetration with loops of thread B. Loops of thread B shall be brought around and cast on the surface of the material where they shall be entered by loops of threads A and A'.

FIG. 46 Stitch Type 509

AVA Documents
Document Sharing Hub

Full document details: ASTM D6193-11

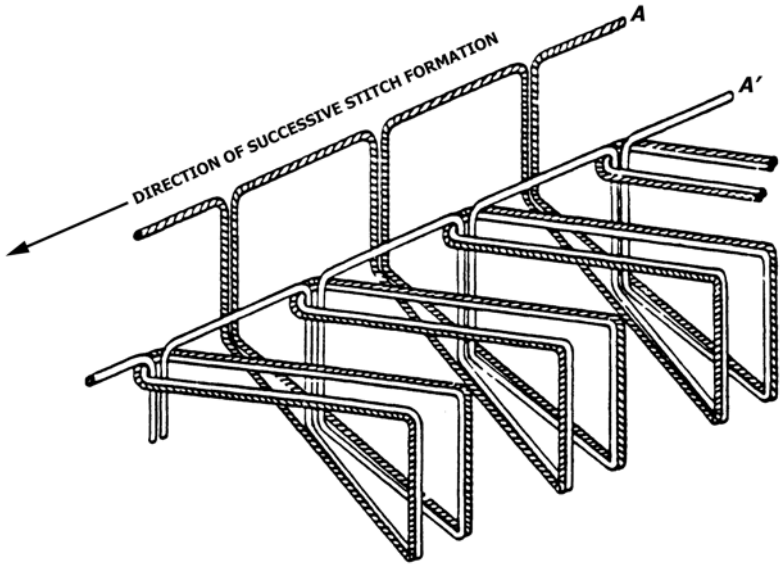

NOTE 1—This type of stitch shall be formed with two needle threads, A and A', which shall be passed through and around the edge to the surface of the material as loops and interlooped with thread A' at the point of needle penetration.

FIG. 47 Stitch Type 510

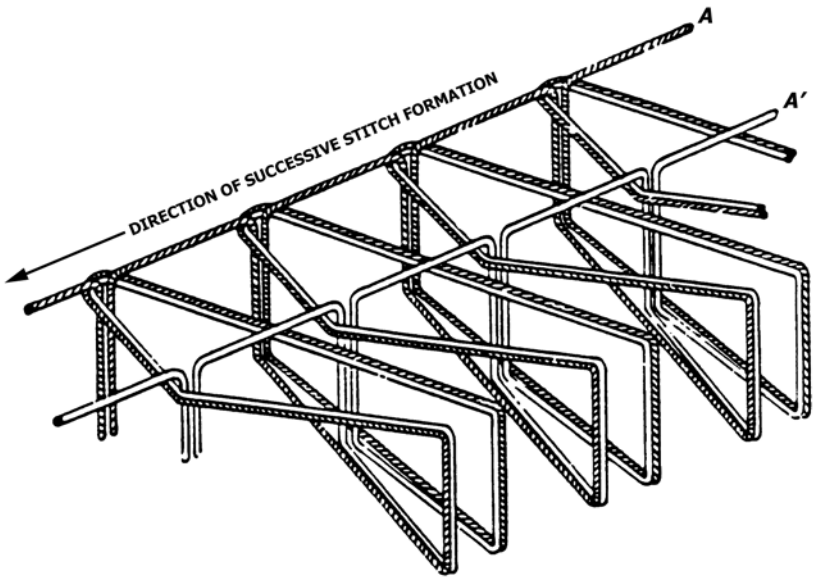

NOTE 1—This type of stitch shall be formed with two needle threads, A and A'. Loops of threads A and A' shall be passed through the material, brought around the edge and cast on the upper surface where they shall be entered by loops of themselves at the point of needle penetration of the next stitch.

FIG. 48 Stitch Type 511

Documents
Document Sharing Hub
Full document details: ASTM D6193-11

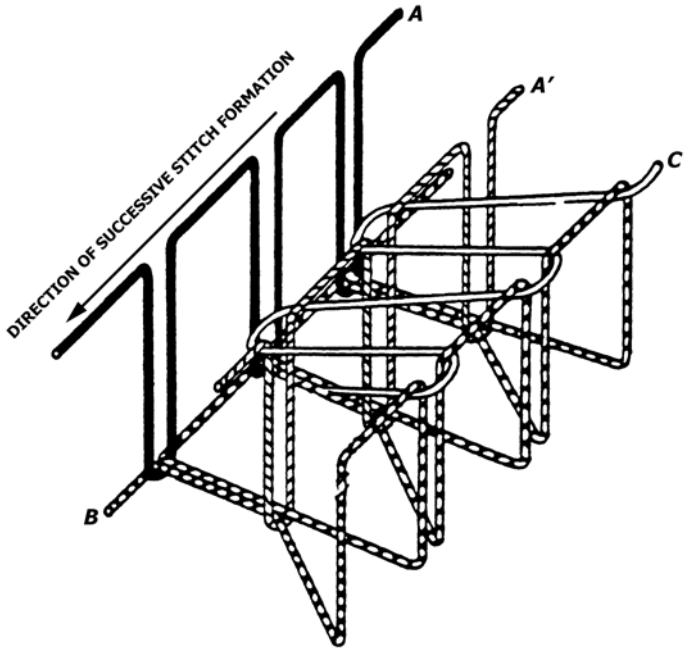

NOTE 1—This type of stitch shall be formed with four threads: two needle threads, A and A'; one looper thread, B; and one cover thread, C. Loops of threads A and A' shall be passed through the material where they shall be interlooped at the lower point of penetration with thread B. The loops of thread B shall be brought around the edge and interlooped with loops of thread C. The loops of thread C shall be extended to the point of needle penetration of thread A' at the next stitch where they shall be entered by loops of that thread.

FIG. 49 Stitch Type 512

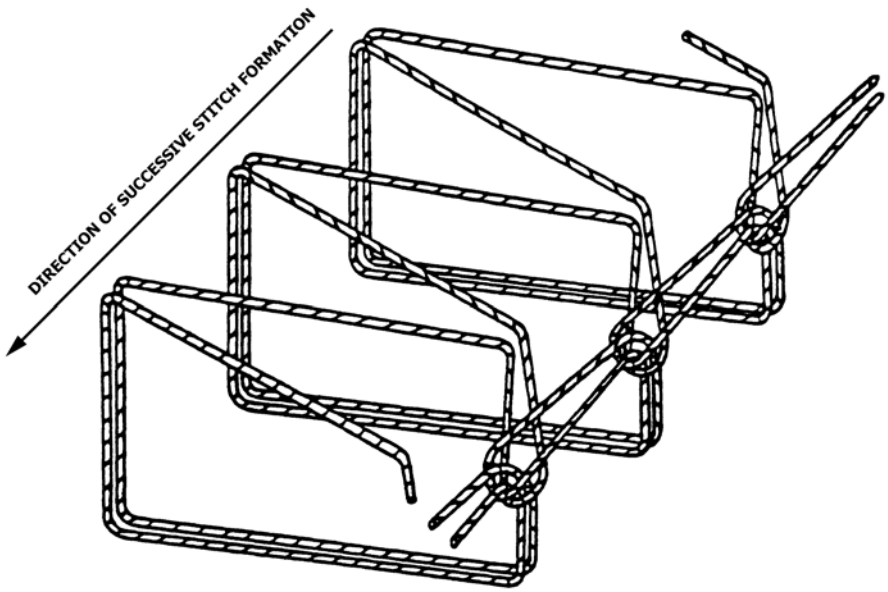

NOTE 1—This type of stitch shall be formed with one needle thread which shall be passed through the material as a loop and brought to the edge, where it shall be passed through a loop formed by the previous stitch and a loop which has been drawn across the upper surface of the material.

FIG. 50 Stitch Type 513

Documents
Document Sharing Hub
Full document details: ASTM D6193-11

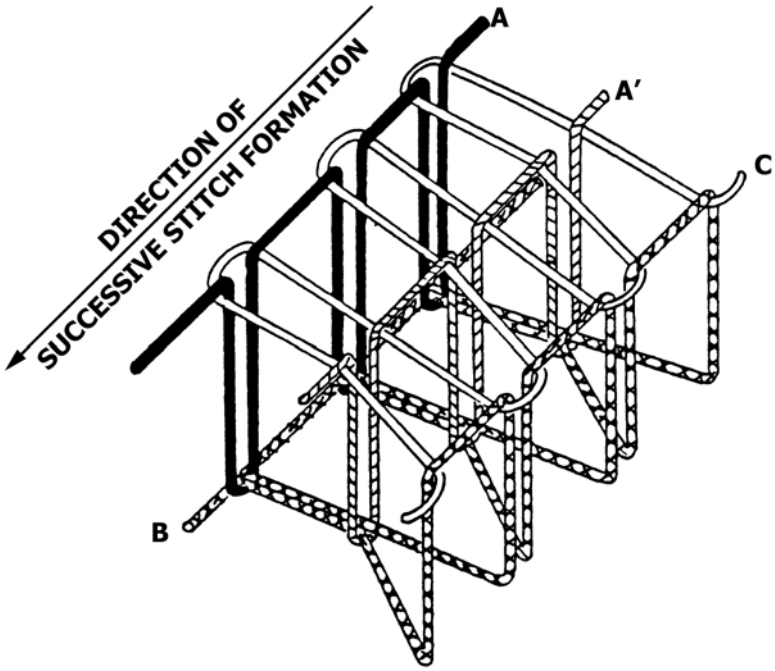

NOTE 1—This type of stitch shall be formed with four threads: two needle threads, A and A'; one looper thread, B; and one cover thread, C. Loops of threads A and A' shall be passed through the material where they shall be interlooped at the lower point of penetration with lops of thread B. The loops of thread B shall be brought around the edge of the material and interlooped with loops of thread C. The loops of thread C shall be extended to the point of needle penetration of threads A and A' at the next stitch where they shall be entered by loops of these threads.

FIG. 51 Stitch Type 514

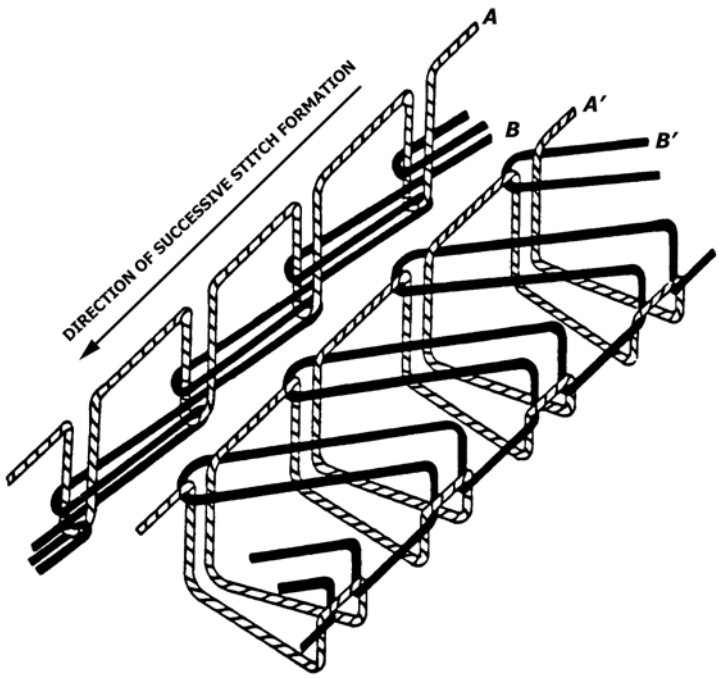

NOTE 1—This type of stitch shall be formed by simultaneously sewing one row of stitch 401 a specified distance from the edge of the material, and one row of stitch type 503 on the edge of the material.

FIG. 52 Stitch Type 515

Documents
Document Sharing Hub
Full document details: ASTM D6193-11

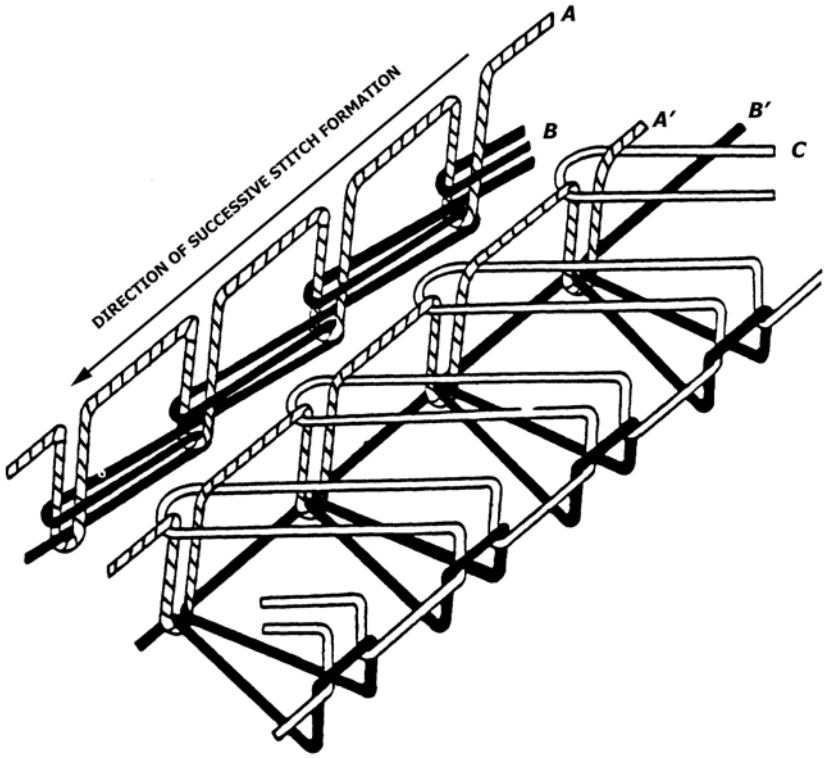

NOTE 1—This type of stitch shall be formed by simultaneously sewing one row of stitch type 401 a specified distance from the edge of the material, and one row of stitch type 504 on the edge of the material.

FIG. 53 Stitch Type 516

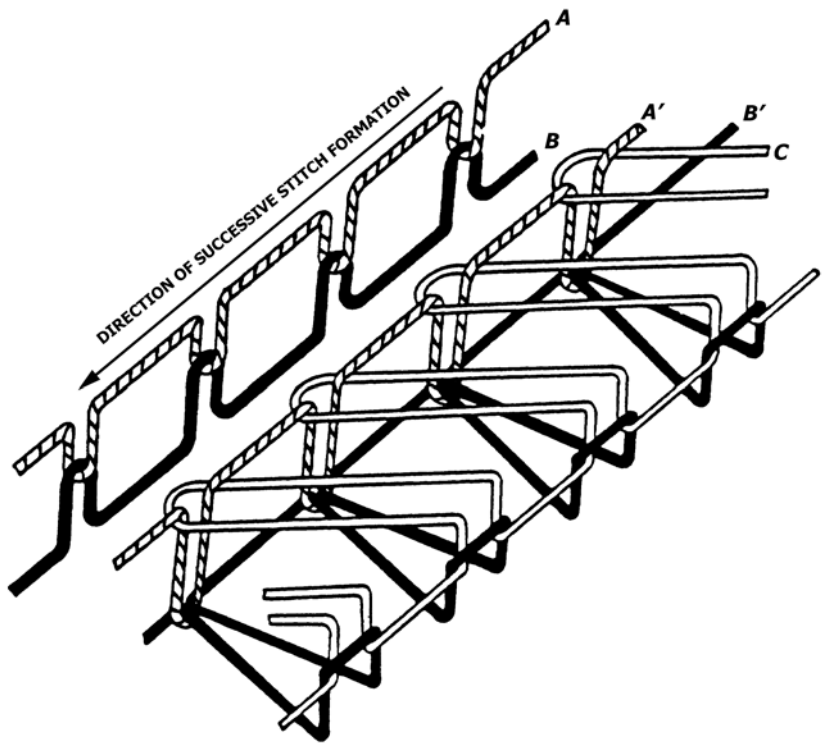

NOTE 1—This type of stitch shall be formed by simultaneously sewing one row of stitch type 301 a specified distance from the edge of the material, and one row of stitch type 504 on the edge of the material.

FIG. 54 Stitch Type 517

Documents
Document Sharing Hub

Full document details: ASTM D6193-11

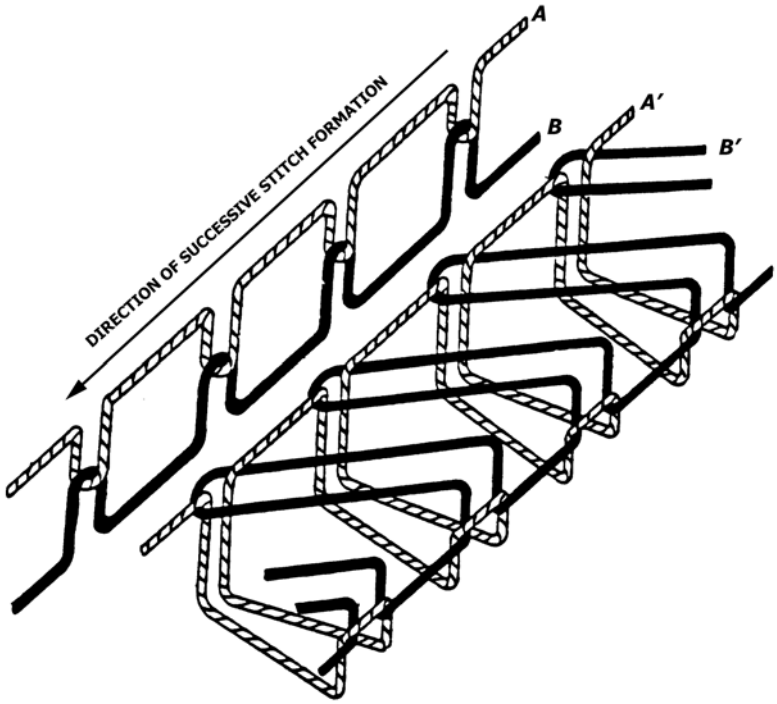

NOTE 1—This type of stitch shall be formed by simultaneously sewing one row of stitch type 301 a specified distance from the edge, and one row of stitch type 503 on the edge of the material.

FIG. 55 Stitch Type 518

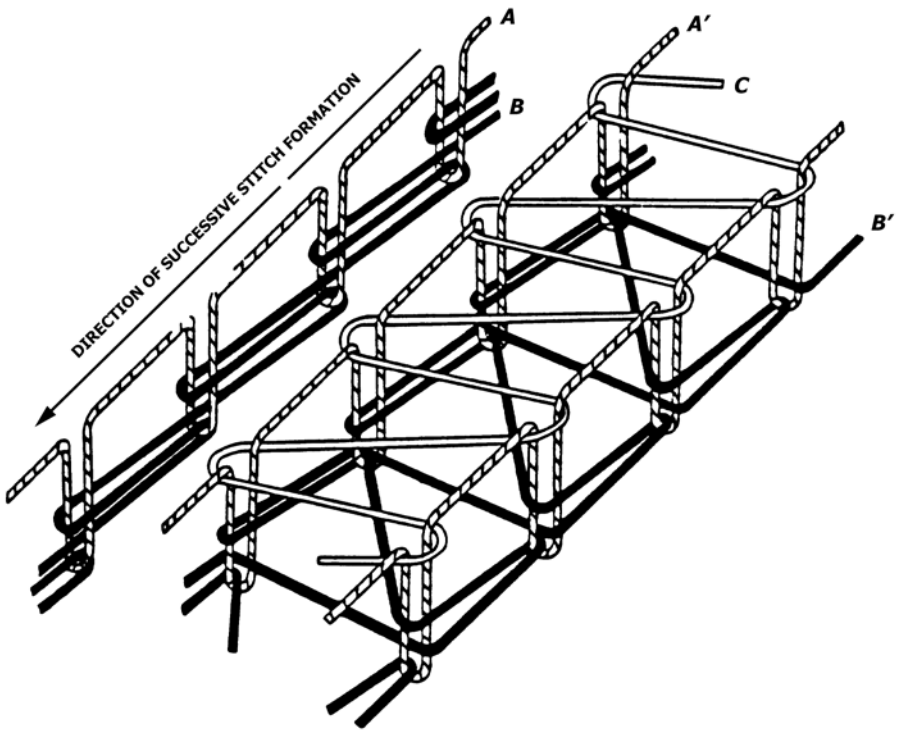

NOTE 1—This type of stitch shall be formed by simultaneously sewing one row of stitch type 401 a specified distance from the edge of the material, and one row of stitch type 602 on the edge of the material.

FIG. 56 Stitch Type 519

AVA Documents
Document Sharing Hub

Full document details: ASTM D6193-11

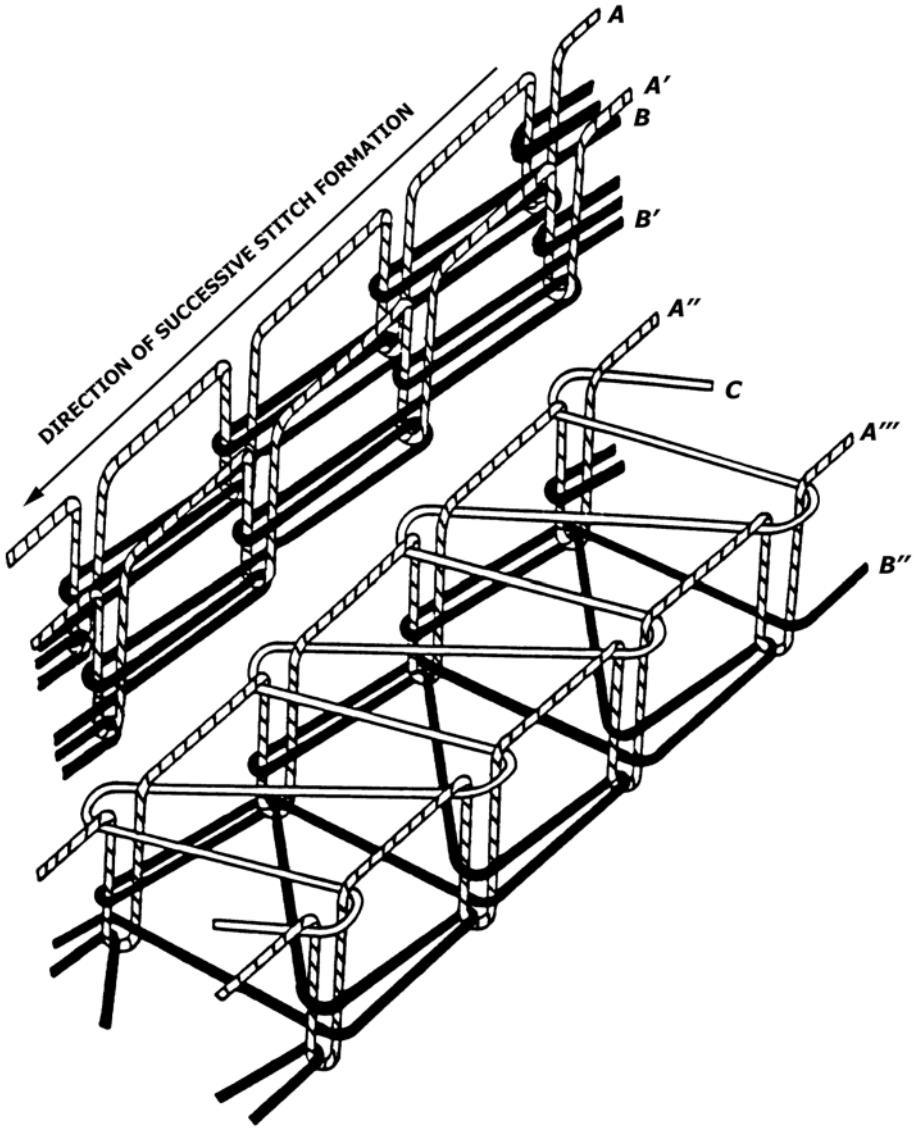

NOTE 1—This type of stitch shall be formed by simultaneously sewing two rows of stitch type 401 a specified distance apart and a specified distance from the edge of the material, and one row of stitch type 602 on the edge of the material.

FIG. 57 Stitch Type 520

Documents
Document Sharing Hub
Full document details: ASTM D6193-11

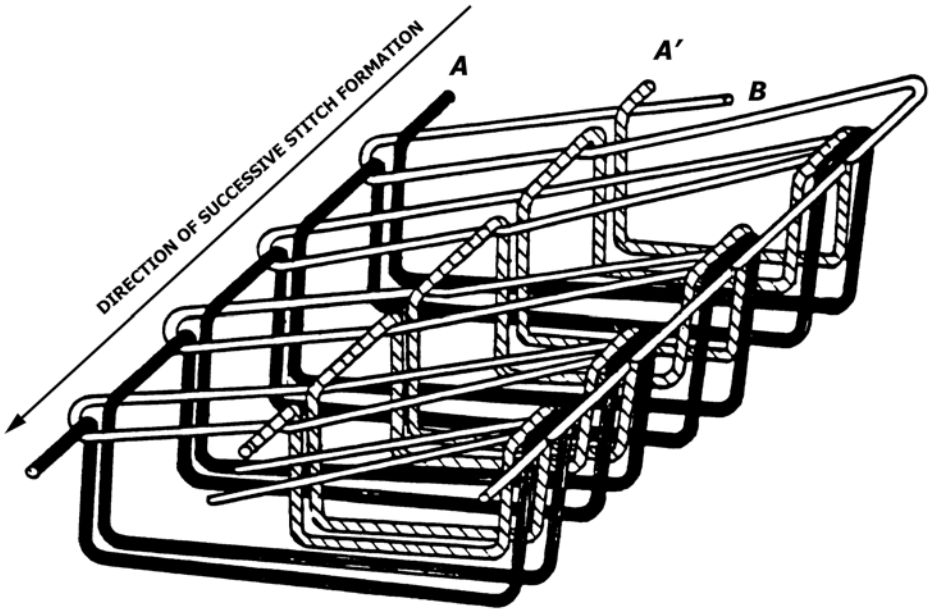

NOTE 1—This type of stitch shall be formed with three threads: two needle threads, A and A', and one looper thread, B. Loops of threads A and A' shall be passed through the material, brought around the edge of the material and interlaced there with thread B. The loops of thread B shall be extended from this interlacing to the points of needle penetration of threads A and A' where they shall be entered by the next stitch of those threads.

FIG. 58 Stitch Type 521

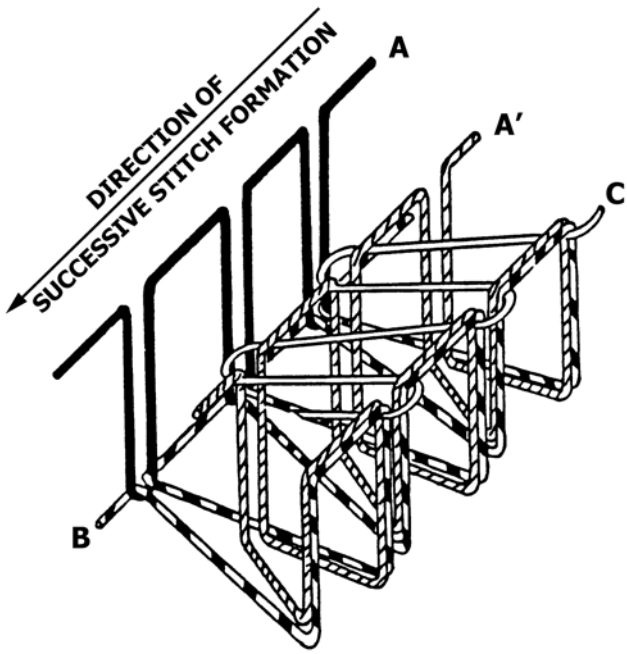

NOTE 1—This type of stitch shall be formed with four threads: two needle threads, A and A^1; one looper thread, B and one looper thread C. Loops of thread A and A^1 shall be interlooped at the lower point of penetration with thread B. The loops of thread A^1 and B shall be brought around the edge and interlooped with loops of thread C. The loops of thread C shall be extended to the next stitch where they shall be entered by loops of that thread.

FIG. 59 Stitch Type 522

AVA Documents
Document Sharing Hub

Full document details: ASTM D6193-11

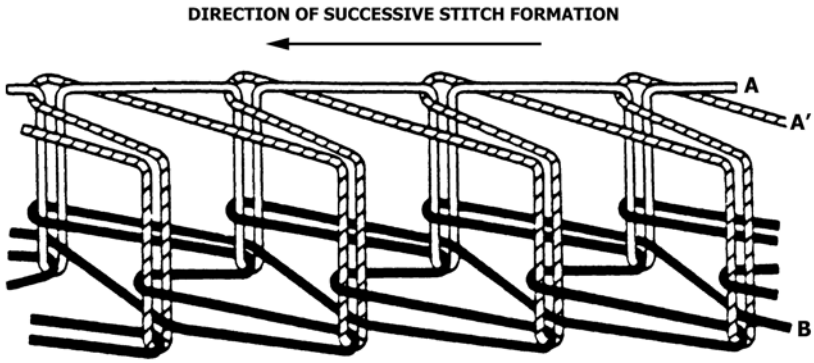

NOTE 1—This type of stitch shall be formed with three threads; two needle threads, A and A', and one looper thread, B. Loops of threads A and A' shall be passed through the material where they shall be interlooped with thread B on the underside. Loops of thread A' shall be extended across the material to the point of needle penetration of the next stitch of thread A where they shall be entered by a loop of that thread as it enters the fabric to make the next stitch.

FIG. 60 Stitch Type 601

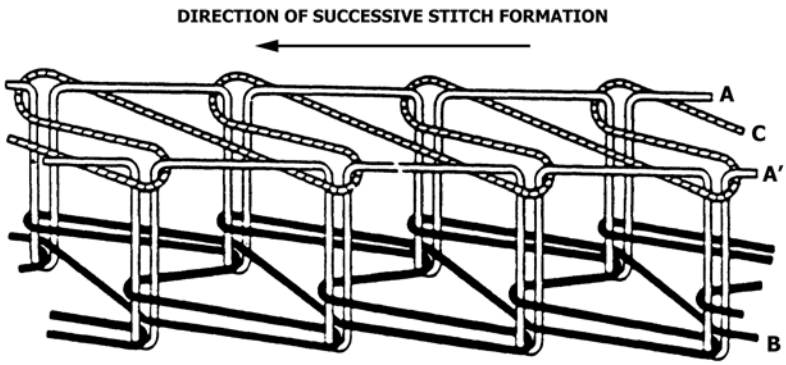

NOTE 1—This type of stitch shall be formed with four threads: two needle threads, A and A'; one looper thread, B; and one cover thread, C. Loops of threads A and A' shall be passed through loops of thread C already cast across the top surface of the material, and then through the material where they shall be interlooped with loops of thread B on the underside.

FIG. 61 Stitch Type 602

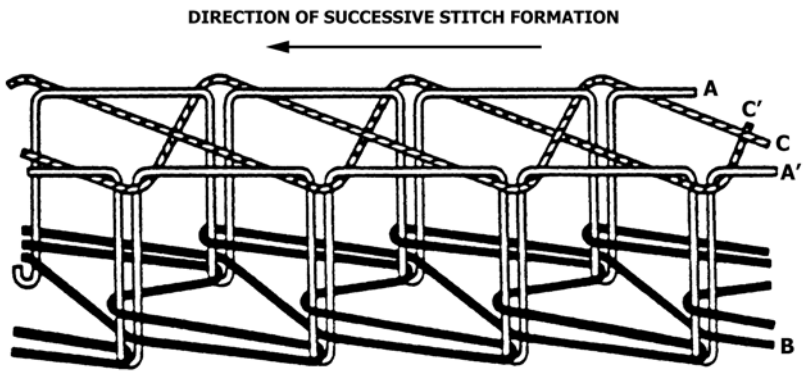

NOTE 1—This type of stitch shall be formed with five threads: two needle threads, A and A'; one looper thread, B; and two cover threads, C and C'. Loops of threads A and A' shall be passed through loops of threads C and C' already cast across the surface of the material and then through the material and interlooped with loops of thread B on the underside of the material.

FIG. 62 Stitch Type 603

AVA Documents
Document Sharing Hub

Full document details: ASTM D6193-11

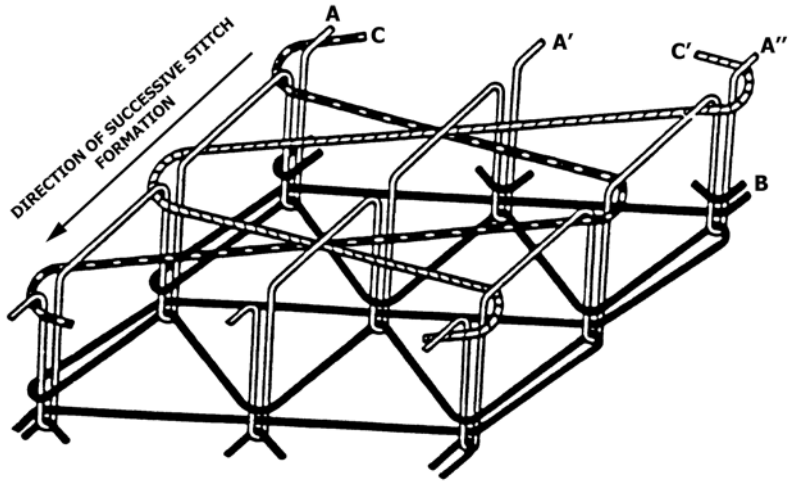

NOTE 1—This type of stitch shall be formed with six threads: three needle threads, A, A' and A"; one looper thread, B; and two cover threads, C and C'. Loops of threads A, A' and A" shall be passed through loops of threads C and C' already cast across the surface of the material, and then through the material where they shall be interlooped with thread B on the underside.

FIG. 63 Stitch Type 604

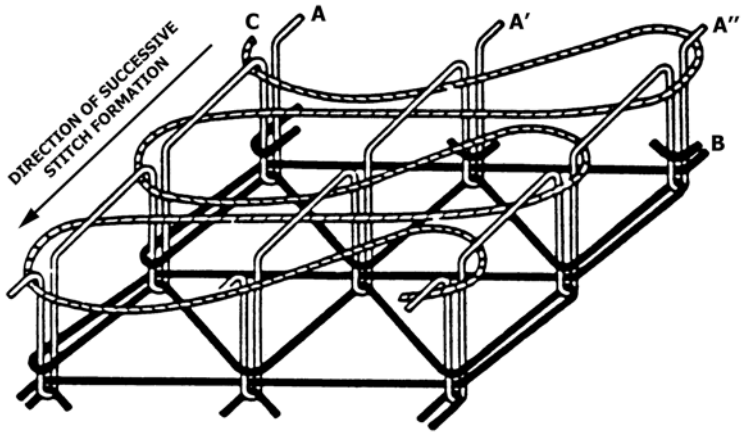

NOTE 1—This type of stitch shall be formed with five threads: three needle threads, A, A', and A"; one looper thread, B; and one cover thread, C. Loops of threads A, A', and A" shall be passed through loops of thread C already cast on the top surface of the material and then through the material where they shall be interlooped with loops of thread B on the underside.

FIG. 64 Stitch Type 605

Documents
Document Sharing Hub
Full document details: ASTM D6193-11

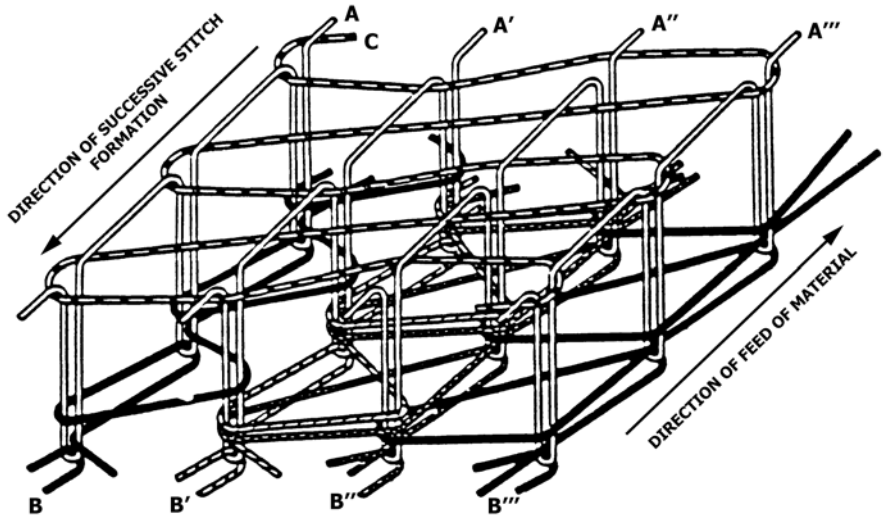

NOTE 1—This type of stitch shall be formed with nine threads: four needle threads, A, A', and A", and A'"; four looper threads, B, B', B", and B'"; and one cover thread, C. Loops of threads A, A', A", and A'" shall be passed through loops of thread C already cast on the top surface of the material, and then through the material where they shall be interlooped with loops of the B threads on the underside as follows: A and A' with B; A' and A" with B' and B"; A" and A'" with B'".

FIG. 65 Stitch Type 606

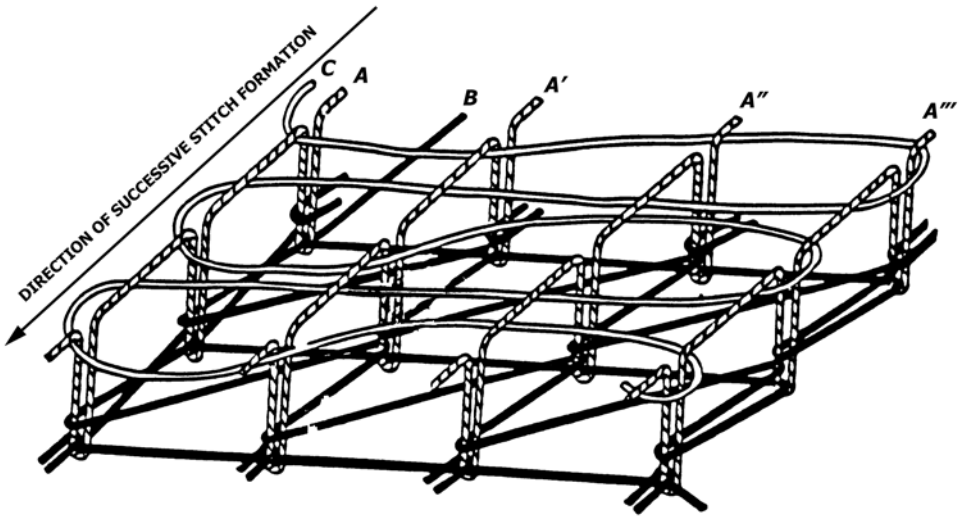

NOTE 1—This type of stitch shall be formed with six threads: four needle threads, A, A', A", and A'"; one looper thread, B; and one cover thread, C. Loops of threads A, A', A", and A'" shall be passed through loops of thread C already cast on the surface of the material, and then through the material where they shall be interlooped with loops of thread B on the underside.

FIG. 66 Stitch Type 607

Documents
Document Sharing Hub
Full document details: ASTM D6193-11

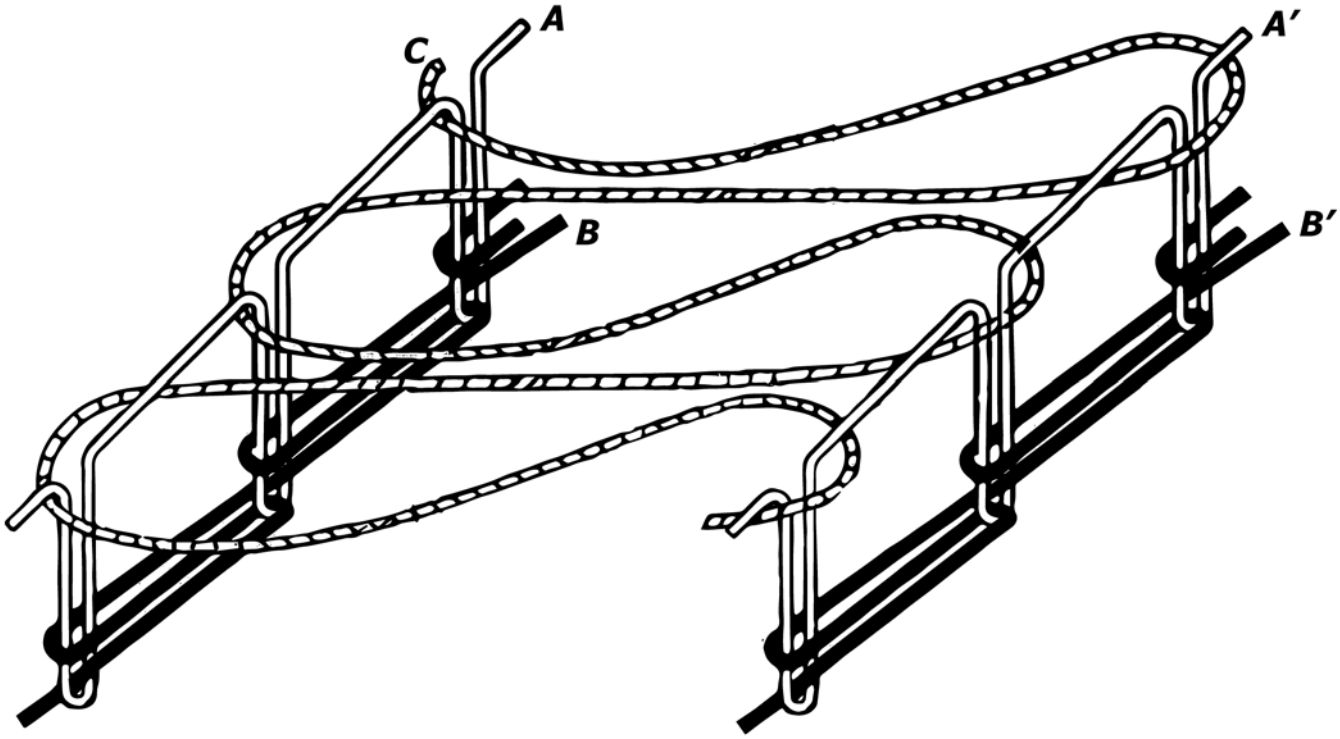

NOTE 1—This type of stitch shall be formed with five threads: two needle threads, A and A'; two looper threads, B and B '; and one cover thread, C. Loops of threads A and A' shall be passed through loops of thread C cast across the top surface of the material, and then through the material where they shall be interlooped with loops of thread B and B 'on the underside.

FIG. 67 Stitch Type 608

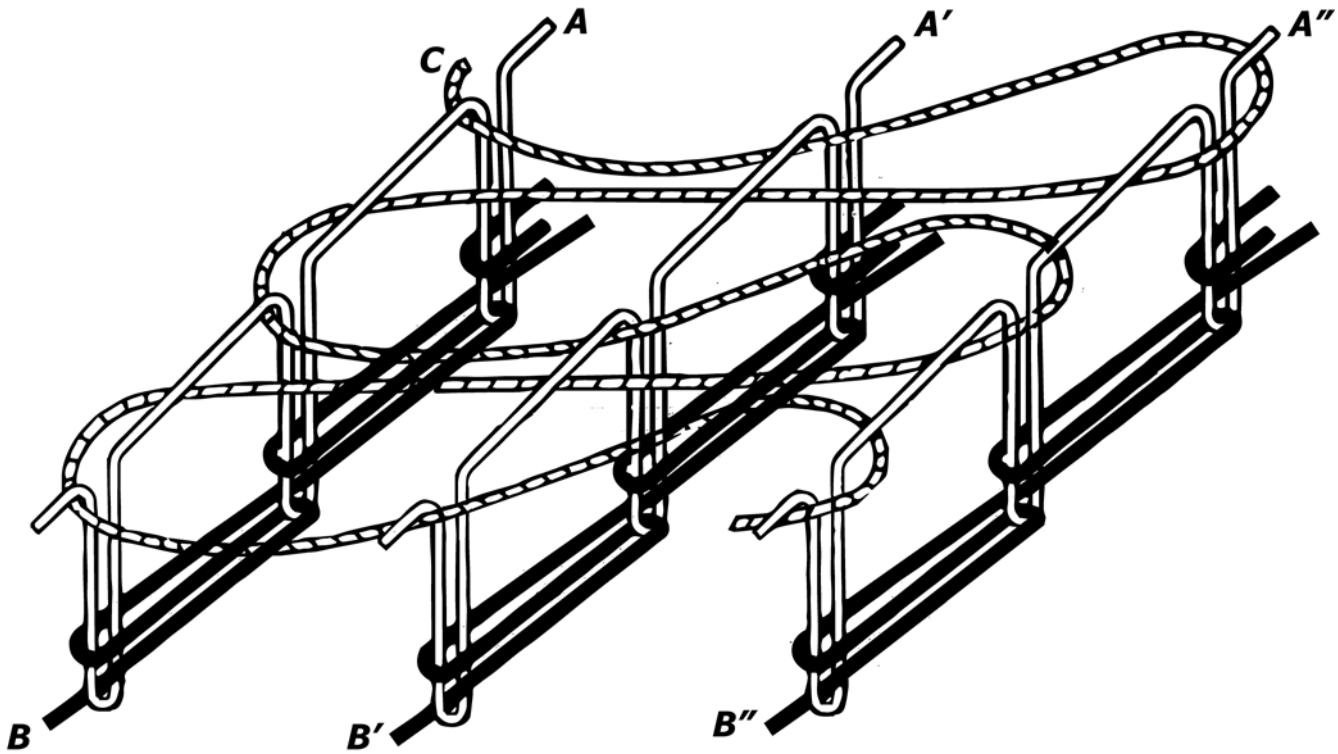

NOTE 1—This type of stitch shall be formed with seven threads: three needle threads, A, A', and A"; three looper threads, B, B', and B"; and one cover thread, C. Loops of threads A, A', and A" shall pass through loops of thread C cast on the top surface of the material and then through the material where they shall be interlooped with loops of threads B, B', and B" on the underside.

FIG. 68 Stitch Type 609

Documents
Document Sharing Hub

Full document details: ASTM D6193-11

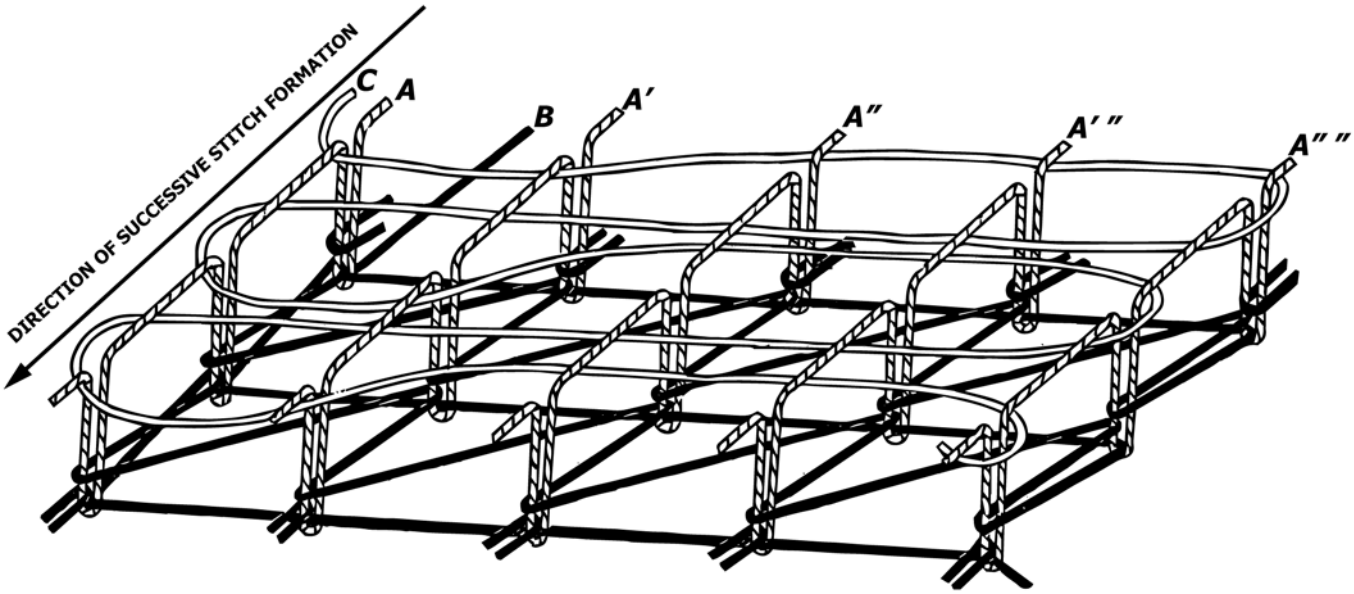

NOTE 1—This type of stitch shall be formed with seven threads: five needle threads, A, A', A' ", and A" "; one looper thread, B; and one cover thread, C. Loops of threads A, A', A' ", and A" " shall be passed through loops of thread C cast on the surface of the material, and then through the material where they shall be interlooped with loops of thread B on the underside.

FIG. 69 Stitch Type 610

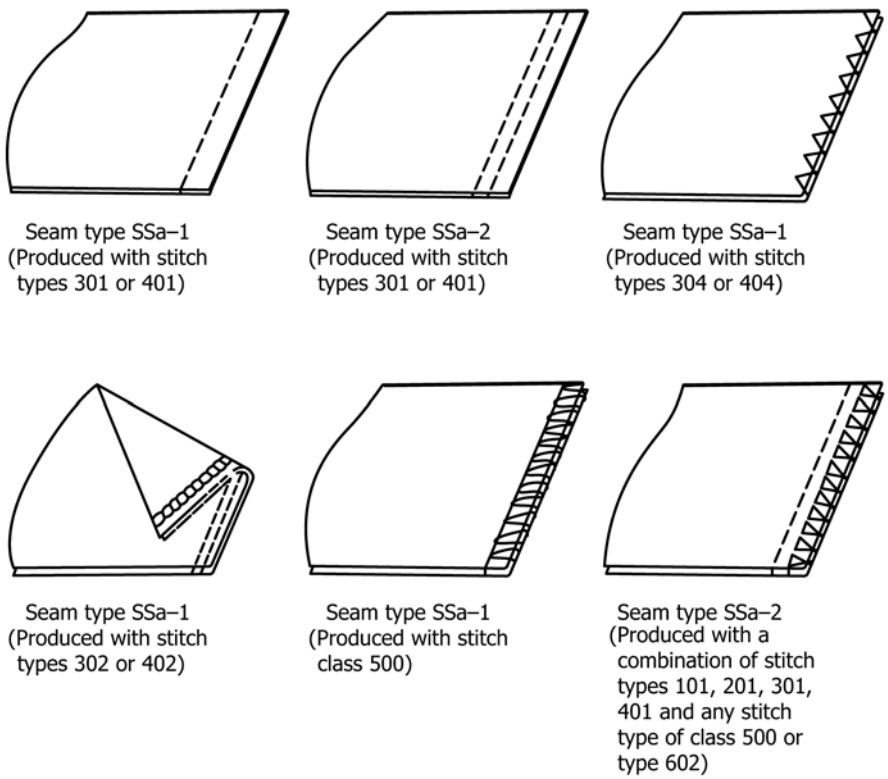

NOTE 1—This type of seam shall be formed by superimposing two or more plies of material and seaming them with one or more rows of stitches a specified distance from their edges.

FIG. 70 Seam Type SSa

Documents
Document Sharing Hub
Full document details: ASTM D6193-11

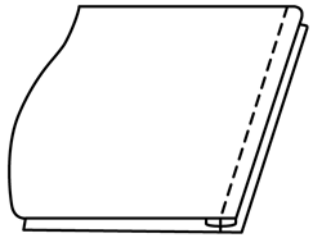

Seam type SSb–1

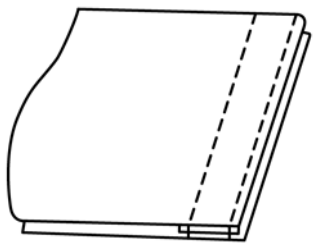

Seam type SSb–2

NOTE 1—This type of seam shall be formed by superimposing two plies of material, turning in the edge of one ply a specified distance to the inside and seaming the plies with one or more rows of stitches.

FIG. 71 Seam Type SSb

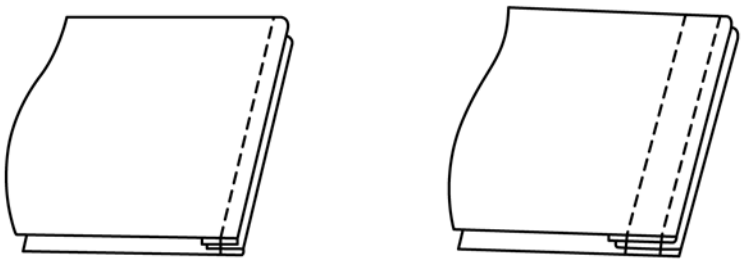

Seam type SSc–1 Seam type SSc–2

NOTE 1—This type of seam shall be formed by superimposing two plies of material, turning the edges of both plies a specified distance to the inside and seaming through the turned edges with one or more rows of stitches a specified distance from the edges.

FIG. 72 Seam Type SSc

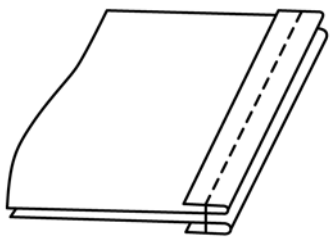

Seam type SSd–1

NOTE 1—This type of seam shall be formed by superimposing two plies of material, turning the edge of both plies a specified distance outwardly and seaming with one or more rows of stitches.

FIG. 73 Seam Type SSd-1

Documents
Document Sharing Hub

Full document details: ASTM D6193-11

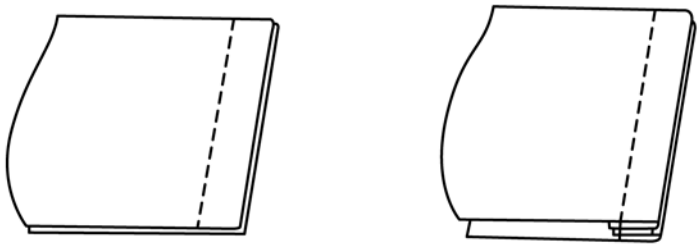

(a) (b)

Seam type SSe–2

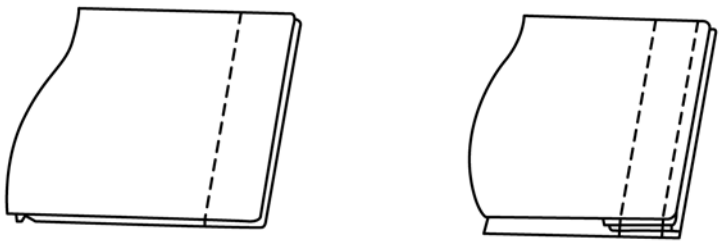

(a) (b)

Seam type SSe–3

NOTE 1—This type of seam shall be formed by:
(a) superimposing two plies of material and seaming with one row of stitches a specified distance from the edge, (seam type SSa-1), and
(b) turning both plies of material at the first seaming to cover the raw edges and seaming with one or more rows of stitches through the folded edges.

FIG. 74 Seam Type SSe

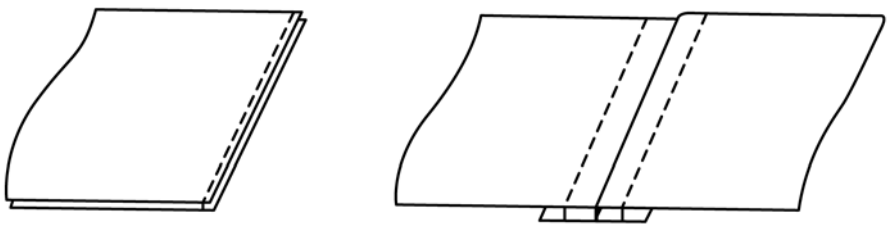

(a) (b)

Seam type SSf–3

NOTE 1—This type of seam shall be formed by:
(a) superimposing two plies of material and seaming with one row of stitches, a specified distance from the edge (Seam Type SSa-1), and
(b) opening both plies of the material and seaming a reinforcing tape over the raw edges of the material with two rows of stitches a specified distance apart.

FIG. 75 Seam Type SSf-3

Documents
Document Sharing Hub
Full document details: ASTM D6193-11

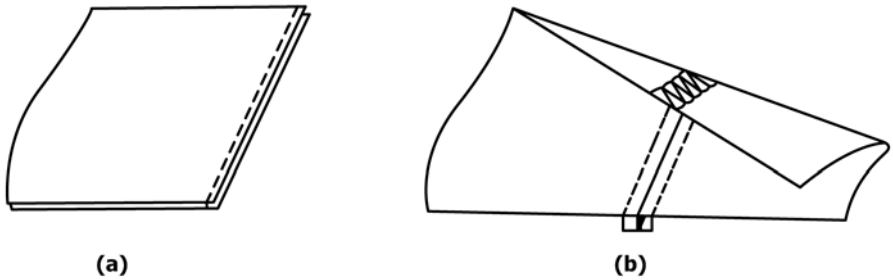

Seam type SSh–2

NOTE 1—This type of seam shall be formed by:
(a) superimposing two plies of material and seaming with one row of stitches, a specified distance from the edge (Seam Type SSa-1), and
(b) opening the plies of material and sewing with a row of covering stitches over the trimmed edges.

FIG. 76 Seam Type SSh-2

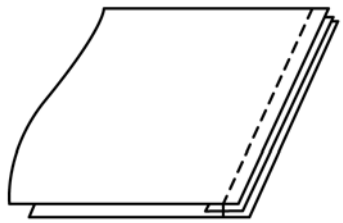

Seam type SSj–1

NOTE 1—This type of seam shall be formed by superimposing two or more plies of material, inserting a plain narrow strip of material between and seaming with one or more rows of stitches a specified distance from the near edge.

FIG. 77 Seam Type SSj-1

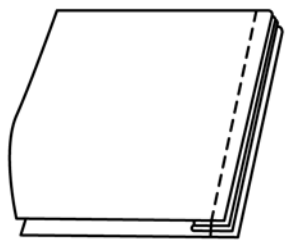

Seam type SSk–1

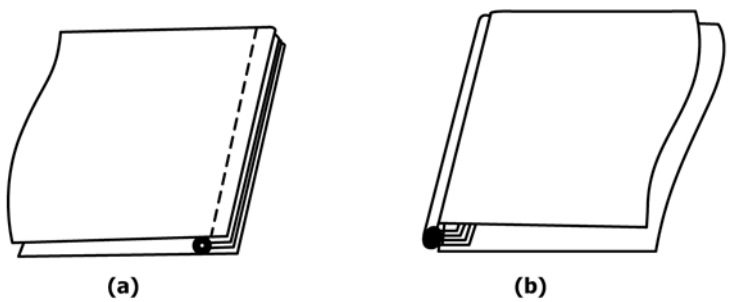

Seam type SSk–1
(with cord)

NOTE 1—This type of seam shall be formed by inserting a folded strip of material, with or without a cord as specified, between two superimposed plies of material and seaming with one or more rows of stitches.

FIG. 78 Seam Type SSk-1

AVA Documents
Document Sharing Hub

Full document details: ASTM D6193-11

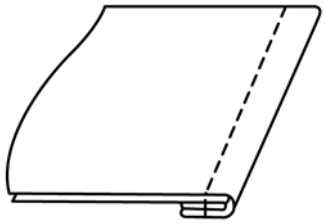

Seam type SSl–1

NOTE 1—This type of seam shall be formed by superimposing one ply of material on another a sufficient distance from the edge to permit turning the edge of one ply of the material under and in, a specified distance around the edge of the other ply, and seaming with one row of stitches.

FIG. 79 Seam Type SSl-1

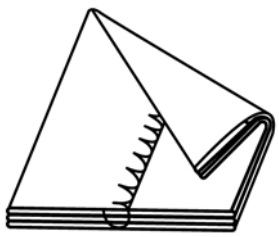

Seam type SSm–1

NOTE 1—This type of seam shall be formed by superimposing two or more plies of material and seaming with one row of stitches in such a manner that the thread passes only partially through the thickness of the last or outer ply. The thread shall not show on the outer side of the last ply unless otherwise specified.

FIG. 80 Seam Type SSm-1

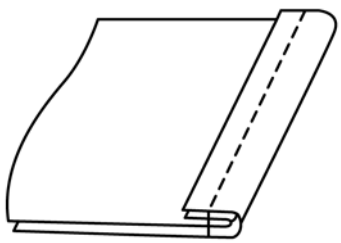

Seam type SSn–1

NOTE 1—This type of seam shall be formed by superimposing two or more plies of material, folding both the edges back over the body of material a specified distance and seaming with one row of stitches.

FIG. 81 Seam Type SSn-1

Documents
Document Sharing Hub

Full document details: ASTM D6193-11

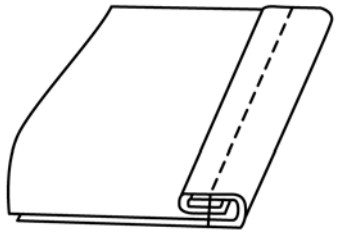

Seam type SSp–1

NOTE 1—This type of seam shall be formed by superimposing two or more plies of material, turning the edges back over the body of material and in, under that fold a specified distance, and seaming with one row of stitches.

FIG. 82 Seam Type SSp-1

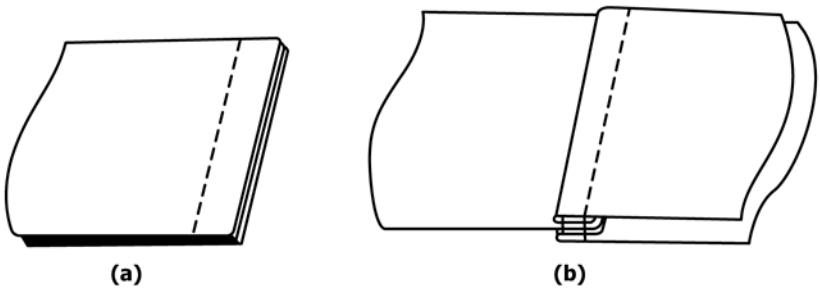

Seam type SSq–2

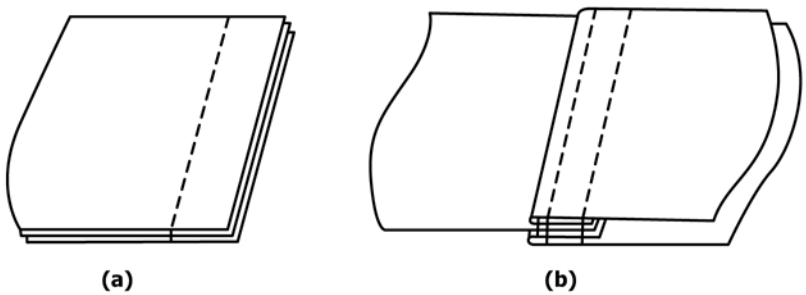

Seam type SSq–3

NOTE 1—This type of seam shall be formed by:

(a) superimposing three or more plies of material and seaming with one row of stitches a specified distance from the edge (seam type SSa-1), and

(b) turning the two outer plies back over their edges and seaming with one or more rows of stitches.

FIG. 83 Seam Type SSq

Documents
Document Sharing Hub
Full document details: ASTM D6193-11

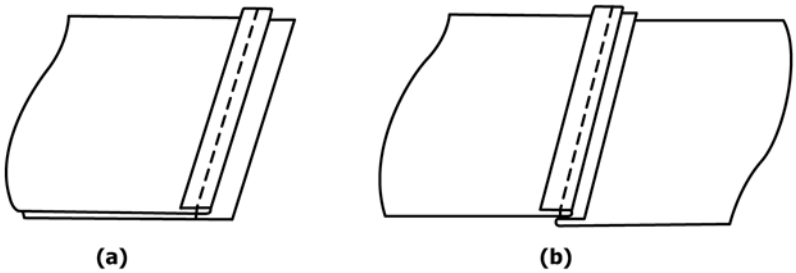

Seam type SSr–1

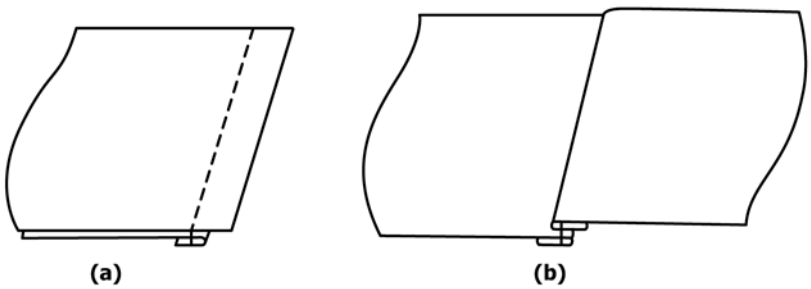

Seam type SSr–1 (Inverted)

NOTE 1—This type of seam shall be formed by superimposing two plies of material, turning the edge of one ply of material and seaming through the turned edge and plies of material with one row of stitches.

FIG. 84 Seam Type SSr-1

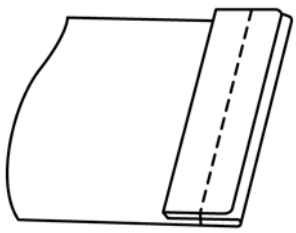

Seam type SSs–1

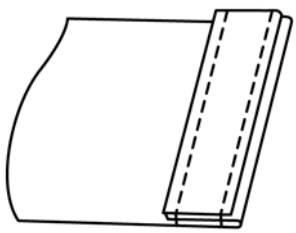

Seam type SSs–2

NOTE 1—This type of seam shall be formed by superimposing a tape, webbing or narrow piece of fabric over the turned edge of a ply or plies of material and seaming with one or more rows of stitches through the turned edge.

FIG. 85 Seam Type SSs

AVA Documents
Document Sharing Hub

Full document details: ASTM D6193-11

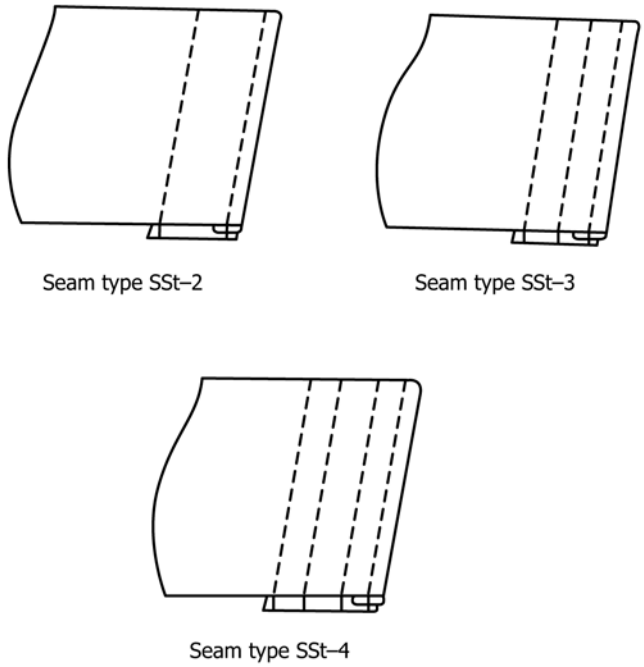

NOTE 1—This type of seam shall be formed by superimposing a ply or plies of material with the outer edge turned, on a tape, webbing or narrow strip of fabric and seaming with two or more rows of stitches, with only the row nearest the folded edge going through the fold.

FIG. 86 Seam Type SSt

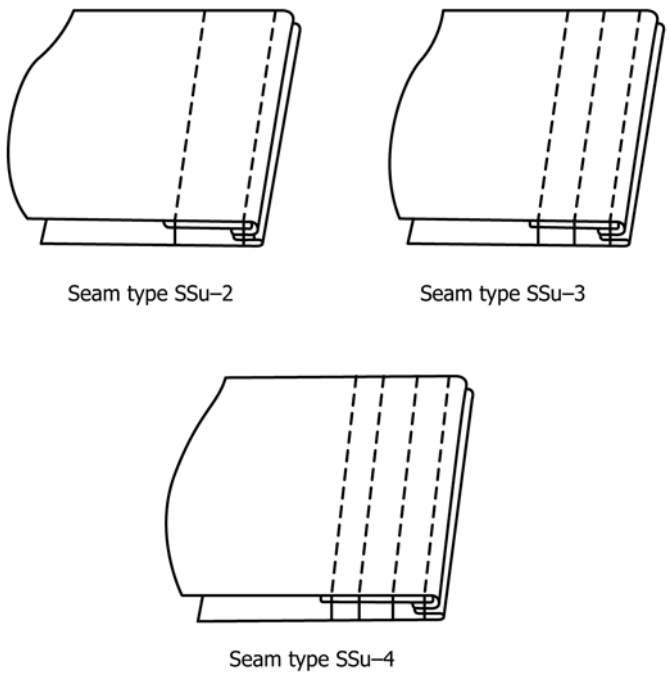

NOTE 1—This type of seam shall be formed by turning the edges of two plies of material inwardly, inserting a tape or strip of material within the inturned upper ply, and stitching with two or more rows of stitches, with only the row nearest the folded edge going through the folds.

FIG. 87 Seam Type SSu

Documents
Document Sharing Hub
Full document details: ASTM D6193-11

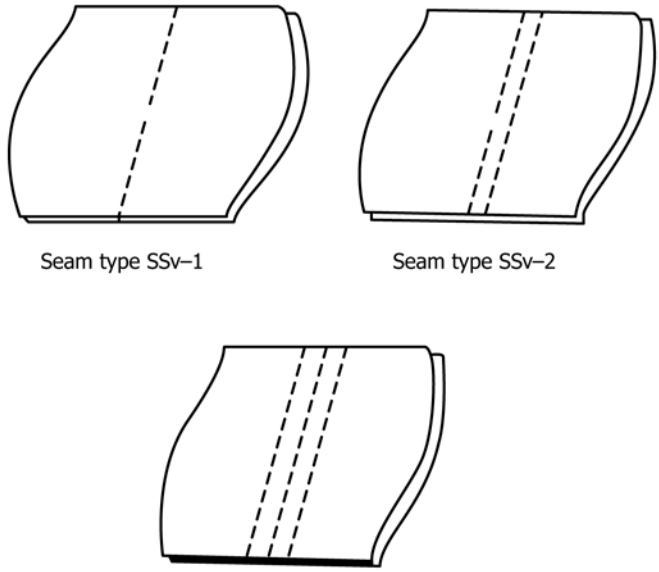

NOTE 1—This type of seam shall be formed by superimposing and seaming two or more plies of material with one or more rows of stitches where evenly spaced lines of stitches are required in the body of the materials, as in quilting comforters, clothing linings, etc.

FIG. 88 Seam Type SSv

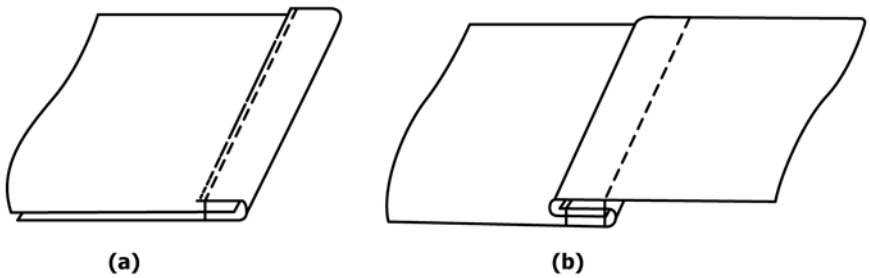

Seam type SSw–2

NOTE 1—This type of seam shall be formed by:

(a) superimposing two pieces of material, turning the edge of one ply of material over the edge of the second ply, and seaming with one row of stitches, and

(b) turning back the body of the upper ply over the folded lower ply and seaming with one row of stitches.

FIG. 89 Seam Type SSw-2

Documents
Document Sharing Hub
Full document details: ASTM D6193-11

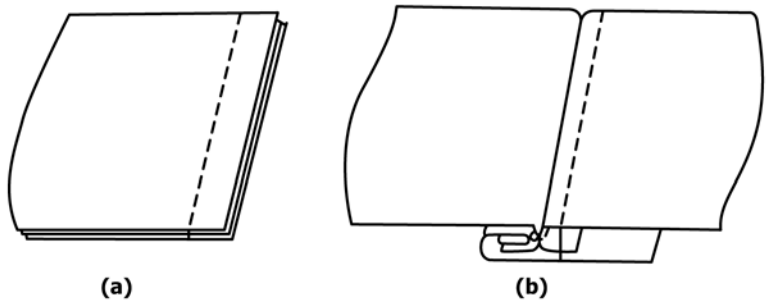

Seam type SSx–2

NOTE 1—This type of seam shall be formed by:
(a) superimposing and seaming three plies of material as in seam type SSa-1 with a single row of stitches a specified distance from the edges, and
(b) turning back the edges of the middle and bottom plies and the body of the bottom ply over these turned edges, turning back the edge of the top ply and the body of the top ply and seaming through the body and the turned edge of the top ply, and the body of the bottom ply with one row of stitches.

FIG. 90 Seam Type SSx

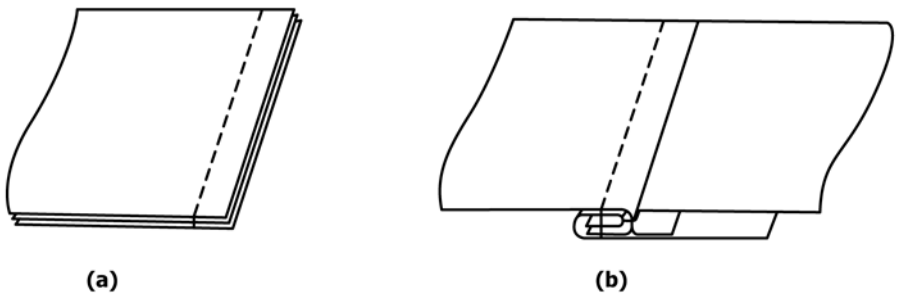

Seam type SSy–2

NOTE 1—This type of seam shall be formed by:
(a) superimposing and seaming three plies of material in seam type SSa-1 with a single row of stitches a specified distance from the edge and
(b) turning back the edges of the middle and bottom plies and the body of the bottom ply over these turned edges, turning back the edge of the top ply and the body of the top ply and seaming through the body of the middle ply, the turned edges of the middle and bottom ply and the body of the bottom ply.

FIG. 91 Seam Type SSy-2

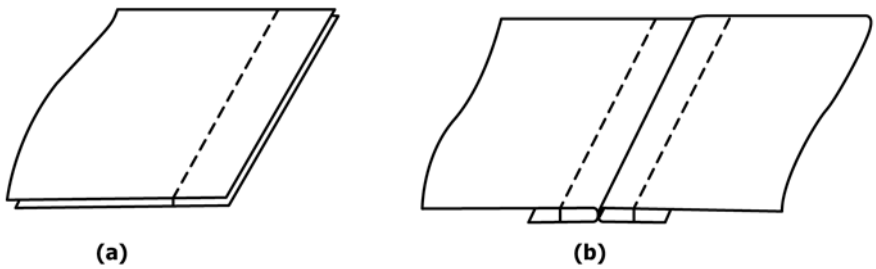

Seam type SSz–3

NOTE 1—This type of seam shall be formed by:
(a) superimposing and seaming two plies of material in seam type SSa-1 and
(b) opening the two plies and turning the edges of each ply back under the body of the ply and seaming through the turned edge of each ply with one row of stitches.

FIG. 92 Seam Type SSz-3

AVA Documents
Document Sharing Hub

Full document details: ASTM D6193-11

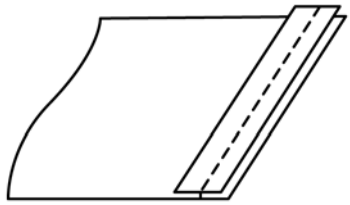

Seam type SSaa–1

NOTE 1—This type of seam shall be formed by superimposing a strip on one ply of material and seaming with one or more rows of stitches.

FIG. 93 Seam Type SSa-1

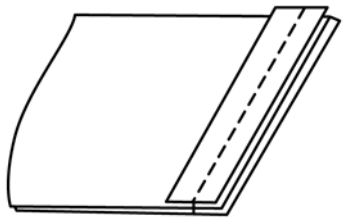

Seam type SSab–1

NOTE 1—This type of seam shall be formed by superimposing a strip on two plies of material and seaming with one or more rows of stitches.

FIG. 94 Seam Type SSab-1

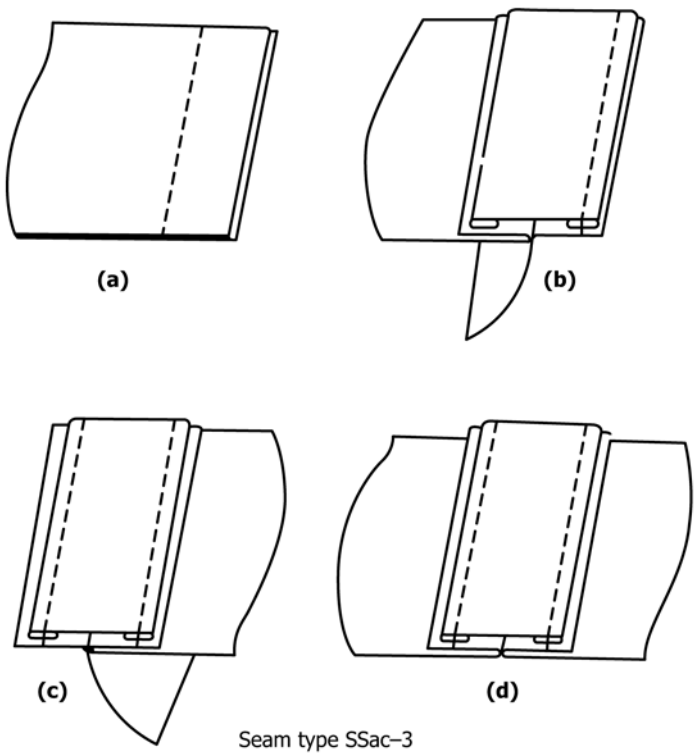

Seam type SSac–3

NOTE 1—This type of seam shall be formed by:
(a) superimposing two plies of material and seaming with one row of stitches a specified distance from the edges in seam type SSa-1, and
(b) turning one ply aside and seaming its edge to a strip with its edges turned in,
(c) turning the other ply aside and seaming its edge to the strip, and
(d) opening both plies of material to finish as shown.

FIG. 95 Seam Type ac-3

AVA Documents
Document Sharing Hub

Full document details: ASTM D6193-11

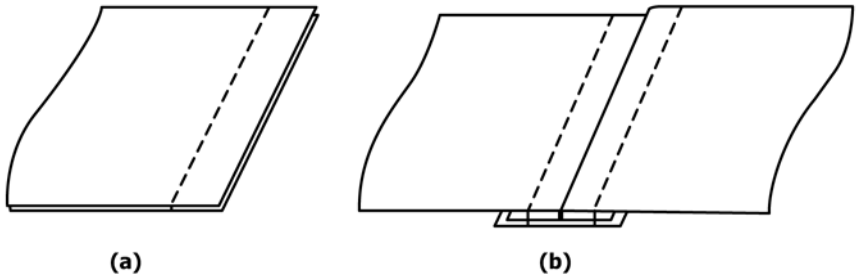

Seam type SSad–3

NOTE 1—This type of seam shall be formed by:
(a) superimposing two plies of material and seaming with one row of stitches a specified distance from the edges in seam type SSa-1, and
(b) opening the two plies, turning the edge of each ply under the body, superimposing to a reinforcing strip and seaming through the body, turned edge, and reinforcement strip.

FIG. 96 Seam Type ad-3

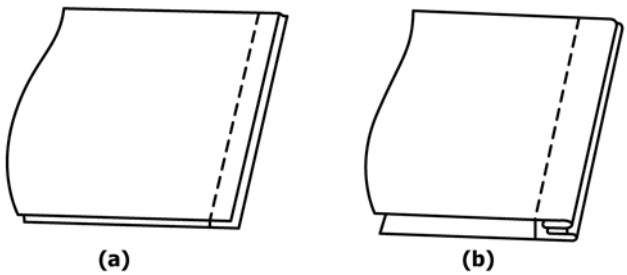

Seam type SSae–2

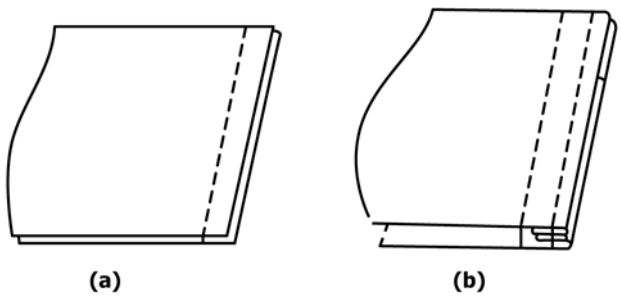

Seam type SSae–3

NOTE 1—This type of seam shall be formed by:
(a) superimposing two plies of material and seaming with a row of stitches a specified distance from the edges in seam type SSa-1 and
(b) turning both plies of material over their edges and seaming with one or more rows of stitches. When more than one row of stitches are used, one row shall pass through the folded edges.

FIG. 97 Seam Type SSae-3

Documents
Document Sharing Hub
Full document details: ASTM D6193-11

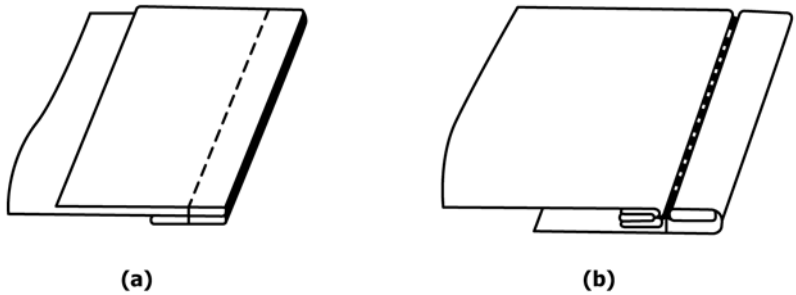

NOTE 1—This type of seam shall be formed by:
(a) superimposing a welt strip on the body of a material which is superimposed on a stay piece and seaming with one row of stitches, and
(b) opening the seam by turning the welt strip over on itself and under the body material and stay piece, the edges of which shall have been turned, and seaming through the first seam and welt strip.

FIG. 98 Seam Type SSaf-2

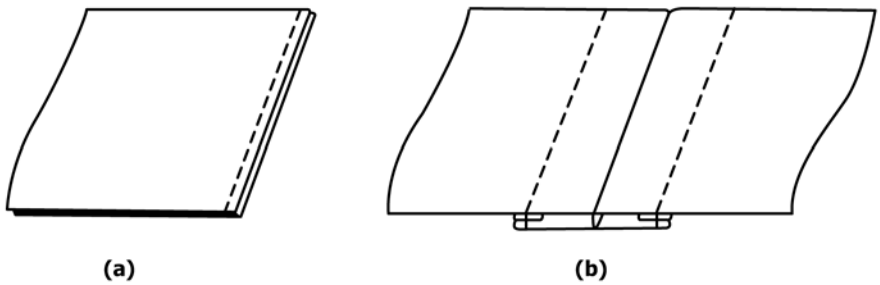

NOTE 1—This type of seam shall be formed:
(a) superimposing two plies of material and seaming in seam type SSa-1, and
(b) opening each ply and superimposing these over a reinforcing strip whose edges are turned in a specified distance, and seaming with two rows of stitches through the reinforcing strip.

FIG. 99 Seam Type SSag-3

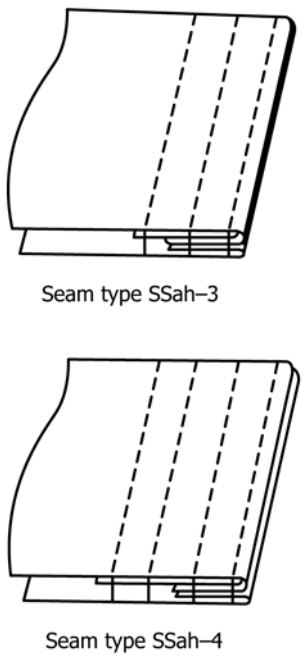

NOTE 1—This type of seam shall be formed by turning the edge of one ply of material around a tape and superimposing this on another ply with edge turned up and stitching with three or more rows of stitches, two rows of which shall be through the turned edges.

FIG. 100 Seam Type SSan

AVA Documents
Document Sharing Hub

Full document details: ASTM D6193-11