This international standard was developed in accordance with internationally recognized principles on standardization established in the Decision on Principles for the Development of International Standards, Guides and Recommendations issued by the World Trade Organization Technical Barriers to Trade (TBT) Committee.

Designation: D6251/D6251M – 23

Standard Specification for Wood-Cleated Panelboard Shipping Boxes[1]

This standard is issued under the fixed designation D6251/D6251M; the number immediately following the designation indicates the year of original adoption or, in the case of revision, the year of last revision. A number in parentheses indicates the year of last reapproval. A superscript epsilon (ε) indicates an editorial change since the last revision or reapproval.

1. Scope

1.1 This specification covers the fabrication and closure of empty and full wood-cleated, hereafter referred to as wood-cleated, panelboard boxes. These boxes are intended for use as containers for domestic and overseas shipment of general materials and supplies, not exceeding 1000 lb [454 kg] depending on box type (see 10.1).

1.2 Wood-cleated panelboard shipping box performance is dependent on its fabricated components and subsequent assembly; therefore, a variety of types, classes, styles, and treatments reflecting varied performance are specified. This specification, however, does not cover wood-cleated panelboard box performance under all atmospheric, handling, shipping, and storage conditions.

1.3 If the use of other construction methods or techniques is acceptable and permitted (see 5.1.17), the resulting packaging systems shall be of equal or better performance than would result from the use of these specified materials and procedures. The appropriate distribution cycle, specified in Practice D4169, can be used to develop comparative procedures and criteria.

1.4 The values stated in either inch-pound units or SI units are to be regarded separately as standard. Within the text, the SI units are shown in brackets. The values stated in each system are not exact equivalents; therefore, each system must be used independently of the other. Combining values from the two systems may result in nonconformance with the standard. See IEEE/ASTM SI 10 for conversion of units.

1.5 *This standard does not purport to address all of the safety concerns, if any, associated with its use. It is the responsibility of the user of this standard to establish appropriate safety, health, and environmental practices and determine the applicability of regulatory limitations prior to use.*

1.6 *This international standard was developed in accordance with internationally recognized principles on standardization established in the Decision on Principles for the Development of International Standards, Guides and Recommendations issued by the World Trade Organization Technical Barriers to Trade (TBT) Committee.*

2. Referenced Documents

2.1 *ASTM Standards:*[2]

D996 Terminology of Packaging and Distribution Environments

D1990 Practice for Establishing Allowable Properties for Visually-Graded Dimension Lumber from In-Grade Tests of Full-Size Specimens

D3951 Practice for Commercial Packaging

D3953 Specification for Strapping, Flat Steel and Seals

D4169 Practice for Performance Testing of Shipping Containers and Systems

D4727/D4727M Specification for Corrugated and Solid Fiberboard Sheet Stock (Container Grade) and Cut Shapes

D6199 Practice for Quality of Wood Members of Containers and Pallets

D6253 Practice for Treatment and/or Marking of Wood Packaging Materials

F1667 Specification for Driven Fasteners: Nails, Spikes, and Staples

IEEE/ASTM SI 10 Standard for Use of the International System of Units (SI): The Modern Metric System

2.2 *Federal Specifications:*[3]

A-A-58078 Plastic Board (For Packaging Applications)

FF-F-133 Fasteners, Wood Joint, Corrugated – (Saw Edge)

2.3 *Code of Federal Regulations:*[4]

CFR Parts 107-180 Title 49, Hazardous Materials Regulations

2.4 *APA—The Engineered Wood Association:*[5]

PRP-108 Performance Standards and Policies for Structural-Use Panels

PS 1-19 Structural Plywood

[1] This specification is under the jurisdiction of ASTM Committee D10 on Packaging and is the direct responsibility of Subcommittee D10.12 on Shipping Containers, Crates, Pallets, Skids and Related Structures.

Current edition approved Oct. 1, 2023. Published December 2023. Originally approved in 1998. Last previous edition approved in 2019 as D6251/D6251M – 19. DOI: 10.1520/D6251_D6251M-23.

[2] For referenced ASTM standards, visit the ASTM website, www.astm.org, or contact ASTM Customer Service at service@astm.org. For *Annual Book of ASTM Standards* volume information, refer to the standard's Document Summary page on the ASTM website.

[3] Available from ASSIST Quicksearch, https://quicksearch.dla.mil/qsSearch.aspx.

[4] Available from U.S. Government Printing Office Superintendent of Documents, 732 N. Capitol St., NW, Mail Stop: SDE, Washington, DC 20401, https://www.ecfr.gov/cgi-bin/ECFR?page=browse.

[5] Available from APA—The Engineered Wood Association, 7011 South 19th Street, Tacoma, WA 98466, http://www.apawood.org.

Copyright © ASTM International, 100 Barr Harbor Drive, PO Box C700, West Conshohocken, PA 19428-2959. United States

Documents
Document Sharing Hub

Full document details: ASTM D6251/D6251M-23

2.5 *American Wood Protection Association (AWPA):*[6]
P36 Standard for Copper Naphthenate (CuN)
P37 Standard for Oxine Copper (Copper-8-Quinolinolate) (Cu8)
2.6 *Military Standard:*[7]
MIL-DTL-2427 Detail Specification Box, Ammunition Packing: Wood, Nailed
2.7 *Hardwood Plywood and Veneer Association:*[8]
ANSI/HPVA HP-1-2020 American National Standard for Hardwood and Decorative Plywood
2.8 *National Institute of Standards and Technology (NIST):*[9]
PS 2-18 Performance Standard for Wood-Based Structural-Use Panels[5]
2.9 *American Lumber Standards Committee (ALSC):*[10]
PS 20-20 American Softwood Lumber Standard
2.10 *National Hardwood Lumber Association (NHLA):*[11]
Rules for the Measurement and Inspection of Hardwood and Cypress
2.11 *National Motor Freight Traffic Association:*[12]
National Motor Freight Classification
2.12 *International Standards for Phytosanitary Measures (IPPC):*[13]
ISPM No. 15 Guidelines for Regulating Wood Packaging Material in International Trade
2.13 *American Society for Mechanical Engineers (ASME):*[14]
ASME B18.6.1 Wood Screws (Inch Series)

3. Terminology

3.1 General definitions for packaging and distribution environments are found in Terminology D996.

4. Classification

4.1 *Type* (see 4.3)*:*
4.1.1 *Type I*—Corrugated plastic.
4.1.2 *Type II*—Corrugated and solid fiberboard.
4.1.3 *Type III*—Plywood.
4.1.4 *Type IV*—Oriented strand board (OSB) (only Style A, B, I, and J).

4.2 *Class:*
4.2.1 *Class 1*—Domestic (see 10.1.1).
4.2.2 *Class 2*—Overseas (see 10.1.2).

4.3 *Style* (see Fig. 1 and 10.1)*:*

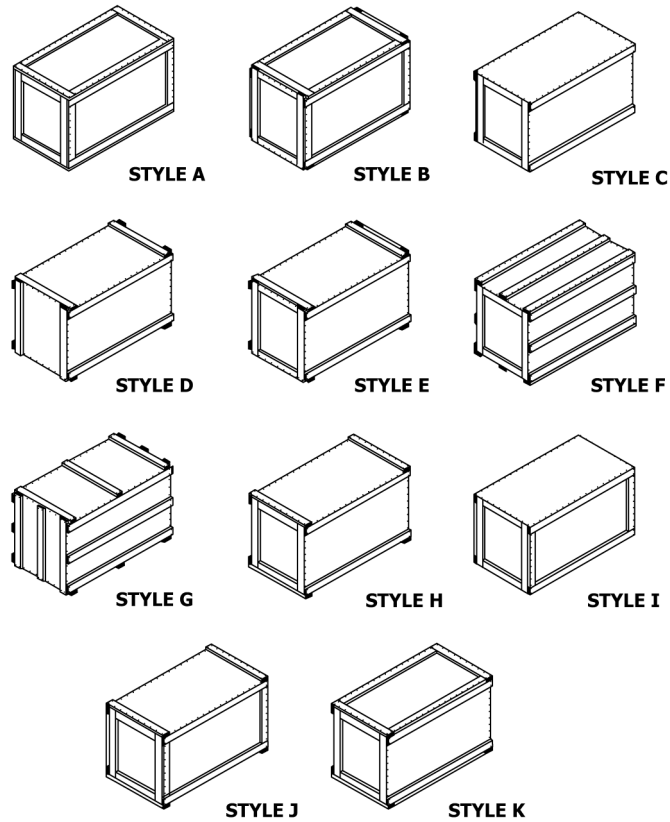

FIG. 1 Styles of Cleated Panel Boxes

4.3.1 *Style A*—Standard box corner (see Fig. 2).
4.3.2 *Style A1*—Type I and II, Style A, modified with skids and when specified (see 5.1.3) unnailed top panel closure (see 4.6 and Fig. 3).
4.3.3 *Style B*—Interlocking three-way corners (see Fig. 4).
4.3.4 *Style C through K*—Limited only to Type II, Class 1 (see 5.1.2 and Fig. 1).
4.3.5 *Style A, B, I, and J*—Type III limited only to these styles (see 5.1.2 and Fig. 1)

4.4 *Water-Repellent Wood Preservative* (see 5.1.13)*:*
4.4.1 *Treatment A*—Without water-repellent wood preservative.
4.4.2 *Treatment B*—With water-repellent wood preservative.

4.5 *Load Type* (see 5.1.19 and 10.2)*:*
4.5.1 *Type 1*—Easy.
4.5.2 *Type 2*—Average.
4.5.3 *Type 3*—Difficult.

4.6 *Unnailed Top Panel Closure Option*—When specified (see 4.3.2 and 5.1.3), Type I and II, Style A1, or Type III and Type IV, Style A or B shall have the top panel modified (see 7.1.8) and closed with flat steel strapping as specified in the Supplemental Requirements. Securing the top panel to the box with other than flat steel strapping shall be prohibited.

4.7 *Part Number*—If required, a specification part number for boxes described in this specification can be formulated (see S3.3).

[6] Available from American Wood Protection Association (AWPA), P.O. Box 361784, Birmingham, AL 35236-1784, http://www.awpa.org.
[7] Available from ASSIST Quicksearch, https://quicksearch.dla.mil/qsSearch.aspx.
[8] Available from Hardwood Plywood and Veneer Association (HPVA), P.O. Box 2789, Reston, VA 22090-0789, http://www.hpva.org.
[9] Available from National Institute of Standards and Technology (NIST), 100 Bureau Dr., Stop 1070, Gaithersburg, MD 20899-1070, http://www.nist.gov.
[10] Available from American Lumber Standards Committee (ALSC), P.O. Box 210, Germantown, MD 20875-0210, http://www.alsc.org.
[11] Available from National Hardwood Lumber Association (NHLA), 6830 Raleigh LaGrange Rd., Memphis, TN 38134, http://www.natlhardwood.org.
[12] Available from National Motor Freight Traffic Association (NMFTA), 1001 N. Fairfax St., Suite 600, Alexandria, VA 22314, http://www.nmfta.org.
[13] Available from the International Plant Protection Convention, www.ippc.int.
[14] Available from the American Society for Mechanical Engineers www.asme.org.

AVA Documents
Document Sharing Hub

Full document details: ASTM D6251/D6251M-23

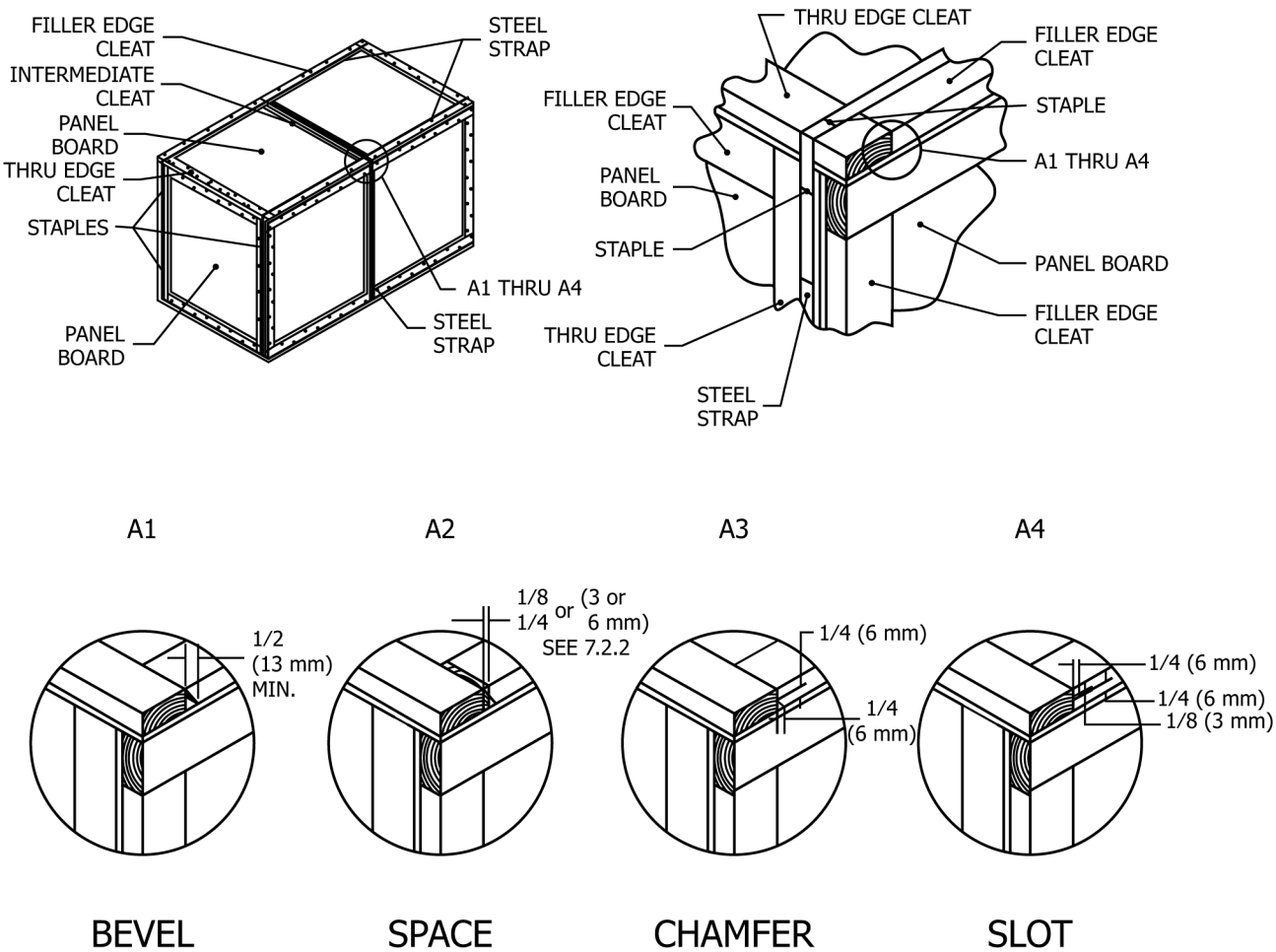

A – FILLER AND INTERMEDIATE CLEAT ENDS AND RELATION TO THROUGH EDGE CLEATS

FIG. 2 Style A Box

5. Ordering Information

5.1 Purchasers shall select the preferred permitted options and include the following information in procurement documents:

5.1.1 Specification title, number, and date.

5.1.2 Box type, class, style, preservative treatment, load type, and closure required (see 4.1 – 4.6, and 6.5).

5.1.3 When Type I and II, Style A1; or Type III and IV, Style A or B, unnailed top panel closure is required (see 4.3, 4.6, and 7.1.8).

5.1.4 Contents weight (see Tables 1-8).

5.1.5 Cleat lumber quality classification required (see 6.3).

5.1.6 Lumber quality used for skid fabrication (see 6.3).

5.1.7 Intermediate cleat requirements for Type III and IV, Class 1 and Class 2, Style I and J (see 7.2.2).

5.1.8 When skids are not required for boxes with gross weights of 200 lb [91 kg] or 100 lb [45 kg] with dimensions of 48 by 24 in. [1219 by 610 mm] or more (see 7.7.2).

5.1.9 When beveled skids are required (see 7.7.2).

5.1.10 When four-way entry skids are required and when nominal 4 by 4-in. [90 by 90-mm] built-up skids are required (see 7.7.3).

5.1.11 Whether container manufacturer's identification is required (see 7.8).

5.1.11.1 Whether modifications to container manufacturer's identification are required (see 7.8.6).

5.1.12 Box dimensions (inside measurements, panel to panel) specified in order of length by width by depth (see 7.5).

5.1.13 When water-repellent wood preservative treatment is required for plywood and cleats (see 4.4 and 6.5).

5.1.14 Whether boxes are to be shipped assembled or knocked-down (see 9.1).

5.1.15 When Class 1 boxes require external strapping (see S1.1).

5.1.15.1 When Class 2 boxes do not require strapping (see S1.1).

5.1.16 When seal joint specimens are required prior to strapping operations (see S3.1.1).

AVA Documents
Document Sharing Hub

Full document details: ASTM D6251/D6251M-23

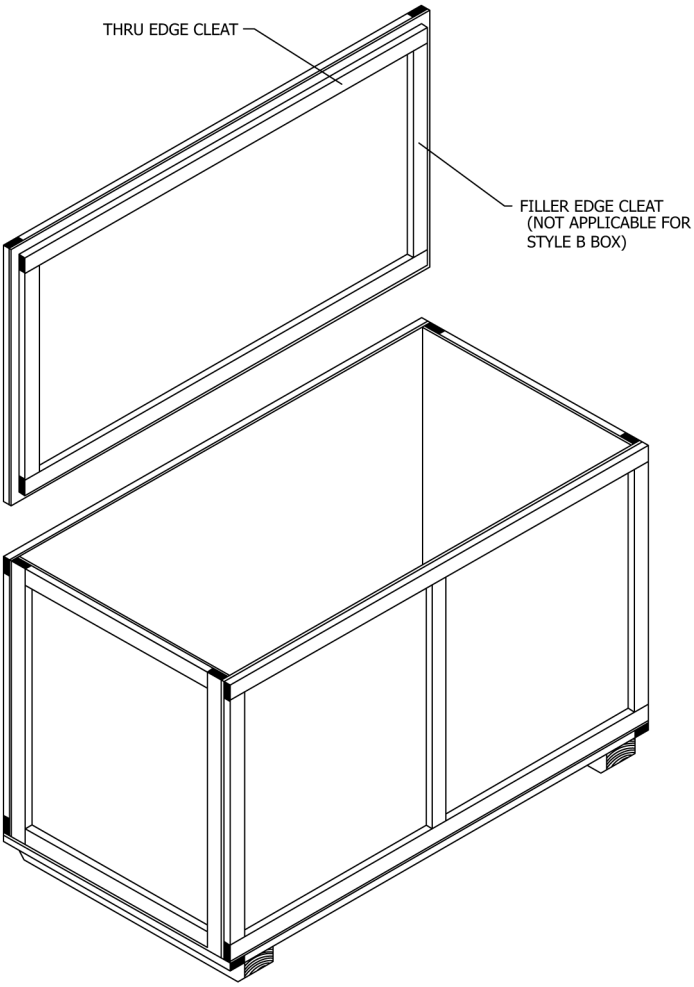

FIG. 3 Unnailed Top Panel Closure

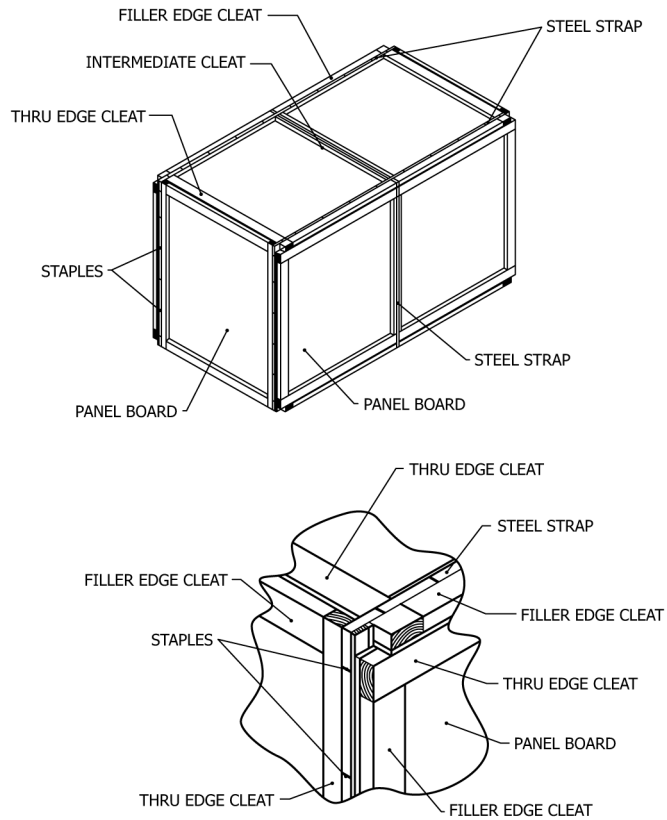

FIG. 4 Style B Box

5.1.17 Whether other construction methods or techniques are acceptable and permitted (see 1.3).

5.1.17.1 Whether proof is required that other construction methods or techniques are acceptable (see 1.3).

5.1.18 Whether sanded plywood and cleats are required (see 6.2.3 and 6.5.3).

5.1.19 Load type (see 4.5).

5.1.20 Whether alternate fastening systems to secure the cleated box panels together are allowed (see 6.4.7).

5.1.21 When ISPM No.15 compliance is required (see 9.3).

TABLE 1 Type II Corrugated and Solid Fiberboard Requirements

Contents Weight Lb [kg]		Class 1		Class 2
Exceeding	Not Exceeding	CF D SW Grades[A]	SF D Grades[A]	SF Grades[A,B]
0 [0]	75 [34]	200	200	V3S or V4S
75 [34]	150 [68]	275	275	V3S or V4S
150 [68]	200 [91]	350	350	V3S or V4S
200 [91]	300 [136]	350	350	. . .
300 [136]	400 [181]	. . .	500	. . .

[A] As defined in Specification D4727/D4727M CF or SF (corrugated or solid fiberboard), D (domestic), SW (single-wall), grades as stated.
[B] Class 2 boxes are limited to Style A or B and shall not exceed 48-in. [1219-mm] length, 36-in. [914-mm] width, or 36-in. [914-mm] depth.

6. Materials and Manufacture

6.1 *Materials*—Materials shall be as specified herein. Materials not specified shall be selected by the contractor or box builder and shall be subject to all provisions of this specification. Materials shall be free of defects, which adversely affect performance or serviceability of the finished product. It is encouraged that recycled material be used when practical. All recovered, recycled, or virgin materials used in the box manufacture shall meet the requirements of this specification and referenced documents. In addition, materials shall not affect or be affected by the product being packed. Type II panelboard shall have no more than 40 % post consumer recovered material.

6.2 *Panelboard*—Panelboard shall be as specified (5.1.2).

6.2.1 *Type I*—Panelboard shall be polyethylene, containing ½ % ultraviolet (UV) inhibitor and shall conform to A-A-58078, Type II, or commercial equivalent. The plastic panel basis weight shall be 245 to 255 lb/1000 ft^2 [1195 to 1245 g/m^2].

6.2.2 *Type II*—Panelboard shall be fiberboard conforming to Specification D4727/D4727M. Class 1 and Class 2 boxes, singlewall (SW), solid (SF), and V board shall conform to the requirements of 7.1.1.

6.2.3 *Type III*—Panelboard for Class 1 boxes shall conform to PS 1-19 Exposure 1 or Exterior panel, or APA PRP-108

AVA Documents
Document Sharing Hub

Full document details: ASTM D6251/D6251M-23

TABLE 2 Types III and IV, Class 1 Panel Requirements

Contents Weight lb [kg]		Min Panel Thickness[A]	
Exceeding	Not Exceeding	PS 1-19, PS 2–18, and PRP-108[B,C,D] in. [mm]	HPVA HP-1-2020[B,E] in. [mm]
0	75	5/16 [F,G]	1/8
[0]	[34]	[8]	[3.2]
75	150	5/16 [F,G]	1/8
[34]	[68]	[8]	[3.2]
150	300	5/16 [F,G]	3/16 [F]
[68]	[136]	[8]	[4.8]
300	500	5/16 [F]	3/16
[136]	[227]	[8]	[4.8]
500	800	5/16	1/4
[227]	[363]	[8]	[6.4]
800	1000	3/8	5/16
[363]	[454]	[9.5]	[8]

[A] Commercial tolerances shall apply.
[B] See 6.2.3.
[C] Alternatively low-density plywood conforming to HPVA HP-1-2020 (see 6.2.3) may be used.
[D] OSB panelboard conforming to APA PRP-108 or PS 2-18 and shall be limited to Style A, B, I, and J boxes.
[E] Low density plywood conforming to HPVA HP-1-2020 (see 6.2.3) shall not be used.
[F] 3/20 in. [3.8 mm] min. thick plywood conforming to HPVA HP-1-2020, Type III, Grade 4, may be used in place of the 5/16 in. [8 mm]. (3/20-in. [3.8-mm] thick plywood is not a standard thickness in PS 1-19).
[G] At the option of the supplier, 1/4-in. [6.4-mm] sanded plywood may be furnished.

HP-1-2020. Panelboard for Class 2 boxes shall conform to PS 1-19 Exposure 1 or Exterior panel; or ANSI/HPVA HP-1-2020. Unless otherwise specified, plywood shall be unsanded. If smooth finish or sanded panels are required, appropriate sanded grades should be specified in the contract (see 5.1.18). The plywood thickness shall be specified in Tables 2 and 3. Plywood shall have no defects (knot holes, worm holes, and so forth) extending through the panel. When the plywood is specified to be surface treated with water-repellant wood preservative, the treatment shall be as specified in 6.5.

6.2.4 *Type IV*—Panelboard for Class 1 boxes shall conform to PS 2-18 Exposure 1 or Exterior panels. Panelboard for Class 2 boxes shall conform to PS 2-18 Exposure 1 or Exterior panels; or ANSI/HPVA HP-1-2020.

6.3 *Lumber*—As specified in 5.1.5, lumber cleats shall conform to Practice D6199, Class 2, PS 20-20 or the NHLA Rules. As specified in 5.1.6, skids shall conform to Practice D6199 class 3, PS 20-20 or the NHLA Rules.

6.4 *Fasteners*—Fasteners are classified as driven nails, staples, wire stitches, single-leg fasteners, wood screws, other fastenings, corrugated fasteners, and alternate fastening systems.

6.4.1 *Nails*—Nails shall be in accordance with Specification F1667 and other industry standards. Nails are classified as plain-shank, helically threaded, annularly threaded, fluted or twisted square wire.

6.4.2 *Staples or Wire Stitches*—Staples or wire stitches shall be made of steel wire not less than 0.0625 in. diameter (16 gauge), [1.59 mm]. The crown bearing surface (the underside) shall be not less than 5/16 in. [8 mm] long except that for Type II boxes the bearing surface shall be not less than 1/2 in. [13 mm] long.

6.4.3 *Single-Leg Fasteners*—Single-leg fasteners shall be formed automatically into a nail from sheared off bright, smooth, knurled, or helically fluted low-carbon steel. Medium carbon steel (stiff-stock) minimum 0.072-in. (15-gauge) [1.83-mm] diameter) wire may also be used. Fasteners are driven subsequently by a special machine at a rapid rate, with sheared-bevel or sheared-square point. For Type I and II boxes, the nail length, before driving, shall be a minimum of 1/8 in. [3 mm] longer than the thickness of the material being joined. For Type III and IV boxes, the nail length, before driving, shall be a minimum of 1/2 in. [13 mm] longer than the thickness of the material being joined. The automatic machine for driving shall be provided with needle-point knives, a J-clinch plate, and a 1/32-in. [1-mm] countersink. Single-leg fasteners shall not be used in joining panelboard to cleats.

6.4.4 *Other Fastenings*—Other single-leg fasteners, preformed or formed from wire, fastenings may be used to the extent specified in 7.1 but must be tested in accordance with 8.1. Steel wire used to form these fasteners shall have a diameter of not less than 0.0625 in. (16 gauge) [1.59 mm]. If wire other than round wire is used, the cross section area shall be equal to that of 0.0625 in. round wire. Fastener points and shanks shall be determined by the test specified in 8.1 for the applicable application and when driven, shall not split the wood members. The fastener withdrawal resistance shall be equal to nails specified in 6.4.1. These fasteners, when used, shall be driven so as to provide a minimum clinch of 1/8 in. [3 mm] and shall not be used with plywood and OSB less than 1/4 in. [6.4 mm] thick.

6.4.5 *Corrugated Fasteners*—Corrugated fasteners shall only be used on Type I and II boxes and shall conform to FF-F-133, or commercial equivalent, and as specified in 7.1.

6.4.6 *Wood Screws*—Wood screws shall be in accordance with ASME B18.6.1 and other industry standards. Wood screws are classified as Flat Countersunk Head, Oval Countersunk Head, Pan Head, and Round Head. Wood screws shall not be used in joining panelboard o cleats.

6.4.7 *Alternate Fastening Systems*—If the use of alternate fastening systems is acceptable or permitted (see 5.1.20), these systems can be used to secure the box cleated panels together (see 7.6).

6.5 *Water-Repellent Wood Preservative*—Water-repellent wood preservative shall be a solution containing either copper naphthenate conforming with Practice D6253, MIL-DTL-2427H and AWPA Standards P36 with a minimum concentration of 2.0 % copper metal, oxine copper (formerly referred to as copper-8-quinolinolate) conforming with Practice D6253, MIL-DTL-2427H and AWPA Standards P37 with a minimum concentration of 1.8 % copper metal, or 3 % zinc naphthenate conforming with Practice D6253 and MIL-DTL-2427H.

6.5.1 *Type I and II*—When specified (see 4.4 and 5.1.13) Type I and II boxes shall have the wood cleats treated with a water-repellent wood preservative specified in 6.5 applied by immersion.

6.5.2 *Type III and IV*—Under some conditions of exposure, Type III and IV boxes may become stained and discolored by molds and mildew. Such staining is undesirable when the identification markings may become obscured. Water-repellent

AVA Documents
Document Sharing Hub

Full document details: ASTM D6251/D6251M-23

TABLE 3 Type III and IV Class 2 Panel Requirements

Contents Weight lb [kg]		Min Panel Thickness[A]							
		Type 1 and 2 Loads				Type 3 Load			
Exceeding	Not Exceeding	PS 1-19, PS 2-18, and PRP-108[B,C] in. [mm]		HPVA HP-1-2020[B,D] in. [mm]		P S1-19, PS 2–18, and PRP-108[B,C] in. [mm]		HPVA HP-1-2020[B,D] in. [mm]	
		Style		Style		Style		Style	
		A and B	I and J[E]	A and B	I and J[E]	A and B	I and J[E,F]	A and B	I and J[E,F]
0	100	5/16 [G]	3/8	3/16 [H]	5/16	5/16 [G]	3/8	3/16 [F]	5/16
[0]	[45]	[8]	[9.5]	[4.8]	[8]	[8]	[9.5]	[4.8]	[8]
100	200	5/16 [G]	3/8	3/16 [H]	5/16	5/16 [G]	3/8	3/16	5/16
[45]	[91]	[8]	[9.5]	[4.8]	[8]	[8]	[9.5]	[4.8]	[8]
200	300	5/16 [G]	1/2	3/16	3/8	5/16	15/32	1/4	3/8
[91]	[136]	[8]	[12.7]	[4.8]	[9.5]	[8]	[11.9]	[6.4]	[9.5]
300	400	5/16 [G]	1/2	3/16	3/8	5/16	15/32	1/4	3/8
[136]	[181]	[8]	[12.7]	[4.8]	[9.5]	[8]	[11.9]	[6.4]	[9.5]
400	500	5/16 [G]	1/2	3/16	3/8	5/16	19/32	1/4	1/2
[181]	[227]	[8]	[12.7]	[4.8]	[9.5]	[8]	[15.1]	[6.4]	[12.7]
500	600	5/16	1/2	1/4	3/8	5/16	19/32	1/4	1/2
[227]	[272]	[8]	[12.7]	[6.4]	[9.5]	[8]	[15.1]	[6.4]	[12.7]
600	800	3/8	5/8	5/16	1/2	3/8	19/32	5/16	5/8
[272]	[363]	[9.5]	[15.9]	[8]	[12.7]	[9.5]	[15.1]	[8]	[15.9]
800	1000	3/8	5/8	5/16	1/2	1/2	19/32	3/8	5/8
[363]	[454]	[9.5]	[15.9]	[8]	[12.7]	[12.7]	[15.1]	[9.5]	[15.9]

[A] Commercial tolerances shall apply.
[B] See 6.2.3.
[C] Alternatively low density plywood conforming to HPVA HP-1-2020 (see 6.2.3) may be used.
[D] Low density plywood conforming to HPVA HP-1-2020 (see 6.2.3) shall not be used.
[E] Only Style I and J, top and bottom panels, all other panels as specified for Style A and B.
[F] For Air Force shipments, Style I and J contents maximum weight shall be 150 lb [65 kg].
[G] At the option of the supplier, 1/4-in. [6.3-mm] sanded plywood may be furnished.
[H] 3/20 in. [3.8 mm] min. thick plywood conforming to HPVA HP-1-2020, Type I, Grade 4, may be used in place of the 3/16-in. [4.8-mm] thick plywood. (3/20-in. [3.8-mm] thick plywood is not a standard thickness in PS 1-19 or PS 2-18).

TABLE 4 Cleat Sizes for Type I Panels

Contents Weight lb [kg]		Class 1 Cleat Size in. [mm][A]		Class 2 Cleat Size in. [mm][A]	
Exceeding	Not Exceeding	Min Width	Min Thickness	Min Width	Min Thickness
0	100	1 3/4	3/4	1 3/4	3/4
[0]	[45]	[35]	[16]	[35]	[16]
100	150	1 3/4	3/4	2 1/4	3/4
[45]	[68]	[35]	[16]	[45]	[16]
150	225	2 5/8	3/4	2 5/8	3/4
[68]	[102]	[54]	[16]	[54]	[16]
225	250	3	3/4	3	3/4
[102]	[113]	[64]	[16]	[64]	[16]
250	300	3	3/4	3	3/4
[113]	[136]	[64]	[16]	[64]	[16]
300	350	3	3/4	3	3/4
[136]	[159]	[64]	[16]	[64]	[16]
350	400	3	3/4	3	3/4
[159]	[181]	[64]	[16]	[64]	[16]
400	500	3	3/4	. . .	. . .
[181]	[227]	[64]	[16]		

[A] Practice D6199 dimension requirements apply.

TABLE 5 Cleat Sizes for Type II Panels

Class 1					
	Contents Weight lb [kg]		Cleat Size[A]		
			Thickness		Width
Box Style	Exceeding	Not Exceeding	Group I and II Woods in. [mm]	Group III and IV Woods in. [mm]	All Groups of Woods in. [mm]
C thru K	0	75	11/16	5/8	1 1/2
	[0]	[34]	[16]	[14]	[32]
C thru K	74	150	3/4	11/16	1 11/16
	[35]	[68]	[16]	[16]	[37]
A and B	0	75	5/8	9/16	1 1/2
	[0]	[34]	[14]	[13]	(32)
A and B	75	150	11/16	5/8	1 11/16
	[34]	[68]	[16]	[14]	[37]
A and B	150	300	3/4	11/16	1 3/4
	[68]	[136]	[16]	[16]	[35]
A and B	300	400	1	13/16	1 3/4
	[136]	[181]	[19]	[16]	[35]
Class 2					
	Contents Weight lb [kg]		Min Cleat Size for all Wood Groups in. [mm][A]		
Box Style	Exceeding	Not Exceeding	Thickness, min	Width, min	
A or B Only	0	200	3/4	1 3/4	
	[0]	[91]	[16]	[35]	

[A] Practice D6199 dimension requirements apply.

preservatives are effective in retarding mildew and similar stains. Type III and IV boxes shall be treated such that the plywood and OSB absorb not less than 2.2-lb/100 ft^2 [10.74 kg/100 m^2] water-repellent wood preservative.

6.5.3 When sanded plywood and cleats are specified (see 5.1.18, and 6.2.3), the plywood shall be sanded prior to surface treatment. Wood shall be preserved by immersing in wood preservative for a minimum of three minutes prior to use in panel fabrication. There shall be evidence of discoloration of the plywood and wood cleats when tested in 8.4 for presence of preservative. The preservative shall be dry prior to assembling cleats to the panelboard or painting the cleats (see 6.5.5). When boxes are painted, wood preservation shall be accomplished prior to paint application.

6.5.4 In general, the copper naphthenate solution is the preferred wood preservative unless end items to be packaged in these boxes are food items not packaged in sealed metal cans or materials which might be adversely affected by residual

AVA Documents
Document Sharing Hub

Full document details: ASTM D6251/D6251M-23