This international standard was developed in accordance with internationally recognized principles on standardization established in the Decision on Principles for the Development of International Standards, Guides and Recommendations issued by the World Trade Organization Technical Barriers to Trade (TBT) Committee.

Designation: D6255/D6255M – 18

Standard Specification for Steel or Aluminum Slotted Angle Crates[1]

This standard is issued under the fixed designation D6255/D6255M; the number immediately following the designation indicates the year of original adoption or, in the case of revision, the year of last revision. A number in parentheses indicates the year of last reapproval. A superscript epsilon (ε) indicates an editorial change since the last revision or reapproval.

This standard has been approved for use by agencies of the U.S. Department of Defense.

1. Scope*

1.1 This specification covers the material and fabrication of new reusable metal (slotted angle) crates intended for use as containers for domestic and overseas shipment of lightweight airframe components and lightweight bulky items, not exceeding 3000 lb [1361 kg] for domestic or overseas air and surface shipments.

1.2 Slotted angle crate performance is dependent on its fabricated components; therefore, a variety of types, classes, and styles reflecting varied performance are specified. This specification, however, does not cover slotted angle crate performance under all atmosphere, handling, shipping, and storage conditions.

1.3 If the use of other construction methods or techniques are acceptable and permitted (see 5.1.12), the resulting packaging systems shall be of equal or better performance than would result from the use of these specified materials and procedures. The appropriate distribution cycle specified in Practice D4169 can be used to develop comparative procedures and criteria.

1.4 The values stated in either inch-pound or SI units are to be regarded separately as standard. Within the text, the SI units are shown in brackets. The values stated in each system are not exact equivalents; therefore, each system must be used independently of the other. Combining values from the two systems may result in nonconformance with the standard. See IEEE/ASTM SI 10 for conversion of units.

1.5 *This standard does not purport to address all of the safety concerns, if any, associated with its use. It is the responsibility of the user of this standard to establish appropriate safety, health, and environmental practices and determine the applicability of regulatory limitations prior to use.*

1.6 *This international standard was developed in accordance with internationally recognized principles on standardization established in the Decision on Principles for the Development of International Standards, Guides and Recommendations issued by the World Trade Organization Technical Barriers to Trade (TBT) Committee.*

2. Referenced Documents

2.1 *ASTM Standards:*[2]

A109/A109M Specification for Steel, Strip, Carbon (0.25 Maximum Percent), Cold-Rolled

A123/A123M Specification for Zinc (Hot-Dip Galvanized) Coatings on Iron and Steel Products

A924/A924M Specification for General Requirements for Steel Sheet, Metallic-Coated by the Hot-Dip Process

B209 Specification for Aluminum and Aluminum-Alloy Sheet and Plate

B633 Specification for Electrodeposited Coatings of Zinc on Iron and Steel

D996 Terminology of Packaging and Distribution Environments

D1990 Practice for Establishing Allowable Properties for Visually-Graded Dimension Lumber from In-Grade Tests of Full-Size Specimens

D3951 Practice for Commercial Packaging

D3953 Specification for Strapping, Flat Steel and Seals

D4169 Practice for Performance Testing of Shipping Containers and Systems

D4727/D4727M Specification for Corrugated and Solid Fiberboard Sheet Stock (Container Grade) and Cut Shapes

D6199 Practice for Quality of Wood Members of Containers and Pallets

D6253 Practice for Treatment and/or Marking of Wood Packaging Materials

F1667 Specification for Driven Fasteners: Nails, Spikes, and Staples

[1] This specification is under the jurisdiction of ASTM Committee D10 on Packaging and is the direct responsibility of Subcommittee D10.12 on Shipping Containers, Crates, Pallets, Skids and Related Structures.

Current edition approved March 1, 2018. Published April 2018. Originally approved in 1998. Last previous edition approved in 2011 as D6255/D6255M – 05 (2011). DOI: 10.1520/D6255_D6255M-18.

[2] For referenced ASTM standards, visit the ASTM website, www.astm.org, or contact ASTM Customer Service at service@astm.org. For *Annual Book of ASTM Standards* volume information, refer to the standard's Document Summary page on the ASTM website.

*A Summary of Changes section appears at the end of this standard

Copyright © ASTM International, 100 Barr Harbor Drive, PO Box C700, West Conshohocken, PA 19428-2959. United States

Documents
Document Sharing Hub
Full document details: ASTM D6255/D6255M-18

IEEE/ASTM SI 10 Standard for Use of the International System of Units (SI): The Modern Metric System

2.2 *Federal Specifications:*

TT-W-572 Wood Preservative: Water-Repellent[3]

2.3 *APA – The Engineered Wood Association:*

APA PS 1 Structural Plywood (with Typical APA Trademarks) [4]

2.4 *American Society of Mechanical Engineers (ASME) Standards:*

B18.2.1 Square and Hex Bolts and Screws (Inch Series)[5]

B18.2.2 Square and Hex Nuts (Inch Series)[5]

B18.2.3.5M Metric Hex Bolts[5]

B18.2.4.1M Metric Hex Nuts, Style 1[5]

B18.2.6M Metric Fasteners for Use in Structural Applications[5]

B18.5 Round Head Bolts (Inch Series)[5]

2.5 *Hardwood Plywood and Veneer Association:*

HPVA HP-1-1994 Hardwood and Decorative Plywood[6]

2.6 *National Motor Freight Traffic Association:*

National Motor Freight Classification[7]

2.7 *Uniform Classification Committee Standard:*

Uniform Freight Classification[8]

2.8 *American Iron and Steel Institute (AISI) Standard:*

Cold-Formed Steel Design Manual[9]

2.9 *IPPC Standard:*[10]

ISPM 15 Regulation of Wood Packaging Material in International Trade

3. Terminology

3.1 *Definitions*— General definitions for packaging and distribution environments are found in Terminology D996.

4. Classification

4.1 *Type:*

4.1.1 *Type I*—Open.

4.1.2 *Type II*—Fully-enclosed or sheathed with solid material.

4.2 *Class:*

4.2.1 *Class 1*—Outside or indeterminate storage.

4.2.2 *Class 2*—Inside or protected storage.

4.3 *Style:*

4.3.1 *Style A*—Without skids or rubbing strips.

4.3.2 *Style B*—With skid blocks or skids with rubbing strips and provisions for forklift truck handling.

5. Ordering Information

5.1 Purchasers should select the preferred permitted options and include the following information in procurement documents:

5.1.1 Specification title, number, and date.

5.1.2 Crate type, class, and style (see Section 4).

5.1.3 Box inside dimensions specified in order of length by width by depth.

5.1.4 Whether sanded plywood is required (see 6.1.5).

5.1.5 Type sheathing required (see 7.6.1).

5.1.6 Whether full-length skids are required (see 7.7.3.2).

5.1.7 Special features (see 7.9).

5.1.8 Marking panel size (see 7.10.1).

5.1.9 Whether crates are to be shipped assembled or disassembled (see 8.1).

5.1.10 Bolt and nut quantities required (see 6.1.2).

5.1.11 If self-locking nuts are required (see 6.1.2).

5.1.12 Whether other construction methods or techniques are acceptable and permitted (see 1.3).

5.1.12.1 Whether proof that other construction methods or techniques are acceptable (see 1.3) is required.

5.1.13 Non-manufactured wood packaging materials (WPM) used for export from or import to the United States shall comply with Practice D6253 and the requirements of ISPM 15.

5.1.13.1 These requirements are recommended for all WPM entering the DoD supply system. Any additional requirements shall be specified in the contract or purchase order.

6. Materials and Manufacture

6.1 *Materials*—It is encouraged that recycled material be used when practical. All recovered, recycled, or virgin materials used in crate manufacture shall meet the requirements of this specification and referenced documents. In addition, materials shall not affect or be affected by the product being packed.

6.1.1 *Slotted Metal Angle*—Slotted metal angle shall conform to the Supplemental Requirements of this specification.

6.1.1.1 *Slotted Angle Surface Finish*—Steel for Class 1 crates shall have a Class 3 surface finish (S4.7.1.3) applied. Steel for Class 2 crates shall have a Class 1 or 2 surface finish (S4.7.1.1 or S4.7.1.2) applied. Aluminum slotted angle shall require no additional finish.

6.1.2 *Nuts and Bolts*— Nuts and bolts used to assemble the slotted angle shall be of hardened steel and zinc plated after machining. All other bolts and nuts shall be zinc-coated and conform to ASME B18.5 or B18.2.1 (B18.2.3.5M), for bolts; and, B18.2.2 (B18.2.4.1M), for nuts.

6.1.2.1 The slotted angle bolts shall be minimum 5⁄16-in. [8-mm] shank diameter, 5⁄8-in. [16-mm] length for Types I, II, and IV, and 3⁄4-in. for Type III and 9⁄16-in. [14-mm] hexagon head. Bolts shall have an unthreaded load bearing shoulder to prevent shearing action on the threads. Bolts shall conform to ASME B18.2.1 (B18.2.3.5M).

6.1.2.2 The slotted angle nuts shall be prevailing torque, hexagon, self-locking, to prevent loosening after extended

[3] Available from the Federal Supply Service Bureau, Specification Section, Suite 8100, 480 L'Enfant Plaza, SW, Washington, DC 20408.

[4] Available from National Institute of Standards and Technology (NIST), 100 Bureau Dr., Stop 3460, Gaithersburg, MD 20899-3460.

[5] Available from the American Society of Mechanical Engineers, 345 East 47th St., New York, NY 10017; American National Standard (ANSI) adopted.

[6] Available from Hardwood Plywood and Veneer Association, P.O. Box 2789, Reston, VA 22090–0789; American National Standards Institute (ANSI) adopted.

[7] Available from National Motor Freight Traffic Association, American Trucking Associations, 2200 Mill Road, Alexandria, VA 22314.

[8] Available from the Uniform Classification Committee, Tariff Publishing Officer, 151 Ellis St., N.E., Suite 200, Atlanta, GA 30335.

[9] Available from the American Iron and Steel Institute, ATTN: Publication Orders, P.O. Box 4327, Chestertown, MD 21690.

[10] International Plant Protection Convention Secretariat (IPPC), Viale delle Terme di Caracalla 00153 Rome, Italy, https://www.ippc.int/en/.

AVA Documents
Document Sharing Hub

Full document details: ASTM D6255/D6255M-18

storage/handling and vibration during shipment. The 5⁄16-in. [8-mm] nuts shall be 0.551 to 0.564-in. [13.99 to 14.33-mm] across the flats (width). Other size nuts shall be 9⁄16 in. [14 mm] across the hexagon flats. Nuts shall conform to ASME B18.2.2 (B18.2.6M).

6.1.3 *Strapping*—Steel strapping used for banding or tension braces shall conform to Practice D3953, Type I, zinc-coated.

6.1.4 *Wood Members*— Wood used for skids, rubbing strips, load-bearing members, blocking and bracing, and all other wooden components shall conform to the applicable Practice D6199, Group II, III or IV woods structural class and shall conform to commercial standards in accordance with Practice D1990.

6.1.5 *Plywood*—Plywood for Class 1 crates shall conform to ANSI/HPVA HP-1-1994, Type I, Grade 3-4; NIST APA PS 1, Interior with Exterior Glue; or, NIST APA PS 1, Exterior, Grade C-C. Plywood for Class 2 crates shall conform to ANSI/HPVA HP-1-1994, Type II, Grade 3-4; or, NIST APA PS 1, Interior, Grade C-D. Plywood shall have no defects (knot holes, worm holes, etc.) extending through the panel. Unless otherwise specified, plywood shall be finished unsanded (see 5.1.4).

6.1.6 *Wood Preservative*—Wood or plywood components shall be treated in accordance with TT-W-572, or a commercial equivalent.

6.1.7 *Fiberboard*—Fiberboard used for sheathing shall conform to Specification D4727/D4727M, Type SF, Class–Weather-Resistant, Grades V2s, V3s, or V4s.

6.1.8 *Sheet Steel*— Steel used for marking panels shall conform to Specification A109/A109M.

6.1.9 *Nails*—Nails used to secure top sheathing shall be cement-coated or chemically-etched common or box nails conforming to Specification F1667.

7. Construction

7.1 *Slotted Angle Member Selection*—Slotted angle selection shall be based on crate size and load weight. Tables 1-3 shall be used as a guide for slotted angle selection.

7.2 *Member Splicing*—Steel or aluminum components shall be continuous lengths. When splicing is necessary, four bolts (minimum) shall be used to secure a lap splice and eight bolts (minimum) shall be used to secure a butt splice, as shown in Fig. 1.

7.3 *Cutting Slotted Angle:*

7.3.1 *All Members*— Members shall be cut at 3-in. [76-mm] increments to utilize the slot and hole pattern properly. After cutting, members shall be trimmed to the required length.

7.3.2 *Diagonal Members*— When cutting of diagonals is required, the wide flange of the angle can be cut on a miter to provide maximum contact area and positive bolting locations.

7.4 *Construction*— One slotted metal angle crate shall have six faces (two sides, two ends, one top, and one base). Each face shall be rectangular in shape and consist of one or more panels. A panel is an area bounded by slotted metal angle members. Normally, the sides are constructed and the ends, top, and base are used to hold the sides together.

TABLE 1 Slotted Angle Steel Beam Load Capacity[A]

Slotted Angle Steel 12-Gage, 0.105-in. [2.7-mm] 1½ by 3-in. [38 by 76-mm]	Beam Length ft [mm]				
	2 [600]	3 [900]	4 [1200]	5 [1500]	6 [1800]
Recommended Load lb [kg]	1450 [658]	980 [445]	740 [336]	500 [227]	350 [159]
Recommended Load lb [kg]	4500 [2041]	3100 [1406]	2100 [953]	1200 [544]	1000 [454]
Recommended Load lb [kg]	10400 [4717]	7500 [3402]	5300 [2404]	4350 [1973]	3500 [1588]
Recommended Load lb [kg]	1550 [703]	1000 [454]	760 [345]	580 [263]	490 [222]

Slotted Angle Steel 14-Gage, 0.075-in. [1.9-mm] 1 ½ by 2¼-in. [38 by 57-mm]	Beam Length ft [mm]				
	2 [600]	3 [900]	4 [1200]	5 [1500]	6 [1800]
Recommended Load lb [kg]	1260 [572]	850 [386]	610 [277]	400 [181]	200 [91]
Recommended Load lb [kg]	2400 [1089]	1700 [771]	1150 [522]	820 [372]	625 [284]
Recommended Load lb [kg]	5190 [2354]	3350 [1520]	2700 [1225]	2100 [953]	1700 [771]
Recommended Load lb [kg]	800 [363]	510 [231]	390 [177]	300 [136]	250 [113]

Slotted Angle Steel 14-Gage, 0.075-in. [1.9-mm] 1½ by 1½-in. [38 by 38-mm]	Beam Length ft [mm]			
	3 [900]	4 [1200]	5 [1500]	6 [1800]
Recommended Load lb [kg]	495 [225]	270 [123]	190 [86]	145 [66]
Recommended Load lb [kg]	590 [268]	395 [179]	295 [134]	190 [86]
Recommended Load lb [kg]	1335 [606]	1035 [470]	690 [313]	540 [245]

[A] Table 1 is usable for slotted angle steel with flange dimensions that are ±⅛ in. [±3 mm] the flange sizes stated.

7.4.1 *Assembly*—Slotted metal angle shall be assembled with bolts of the same diameter for which the slotted metal angle was intended or designed. Bolts and nuts shall be drawn tight to secure against loosening. Bolts and nuts shall be as specified in 6.1.2.

7.4.2 *Braces*—All panels shall have either diagonal braces or steel strapping braces for support.

7.4.2.1 *Diagonal Braces*— Diagonal brace placement is shown in Fig. 2. All diagonal braces shall be installed to maximize utilization of the round holes in the metal angle.

AVA Documents Document Sharing Hub

Full document details: ASTM D6255/D6255M-18

TABLE 2 Slotted Angle Steel Column Load Capacity[A]

Slotted Angle Steel 14-Gage, 0.075-in. [1.9-mm] 1½ by 1½-in. [38 by 38-mm]	Column Length ft [mm]			
	3 [900]	4 [1200]	5 [1500]	6 [1800]
Recommended Load lb [kg]	1480 [672]	1180 [535]	940 [426]	740 [336]
Recommended Load lb [kg]	3830 [1737]	3475 [1576]	2970 [1347]	2475 [1123]
Recommended Load lb [kg]	3900 [1769]	3565 [1617]	3170 [1438]	2620 [1188]

Slotted Angle Steel 14-Gage, 0.075-in. [1.9-mm] 1½ by 2¼ in. [38 by 57-mm]	Column Length ft [mm]				
	3 [900]	4 [1200]	5 [1500]	6 [1800]	7 [2100]
Recommended Load lb [kg]	2490 [1130]	1850 [839]	1530 [694]	1280 [581]	940 [426]
Recommended Load lb [kg]	5500 [2495]	5000 [2268]	4350 [1973]	3800 [1724]	3350 [1520]
Recommended Load lb [kg]	5600 [2540]	5390 [2445]	5000 [2268]	4480 [2032]	4150 [1882]

Slotted Angle Steel 12-Gage, 0.105-in. [2.7-mm] 1½ by 3-in. [38 by 76-mm]	Column Length ft [mm]				
	3 [900]	4 [1200]	5 [1500]	6 [1800]	7 [2100]
Recommended Load lb [kg]	3450 [1565]	2870 [1302]	2360 [1071]	1670 [758]	1150 [522]
Recommended Load lb [kg]	7960 [3611]	7040 [3193]	6240 [2830]	5400 [2449]	4500 [2041]
Recommended Load lb [kg]	8900 [4037]	7940 [3602]	6700 [3039]	5800 [2631]	4650 [2109]

[A] Table 2 is usable for slotted angle steel with flange dimensions that are ±⅛ in. [±3 mm] the flange sizes stated.

TABLE 3 Slotted Angle Aluminum Configurations Load Capacity[A]

Slotted Angle Aluminum 13-Gage, 0.089-in. [2.3-mm] 1½ by 2¼-in. [38 by 57-mm]	Beam Length ft [mm]			
	3 [900]	4 [1200]	5 [1500]	6 [1800]
Recommended Load lb [kg]	450 [204]	350 [159]	260 [118]	180 [82]
Recommended Load lb [kg]	950 [431]	600 [272]	400[B] [181]	350[B] [159]
Recommended Load lb [kg]	2200 [998]	1600 [726]	1240 [563]	940 [426]

Slotted Angle Aluminum 13-Gage, 0.089-in. [2.3-mm] 1½ by 2¼-in. [38 by 57-mm]	Beam Length ft [mm]				
	3 [900]	4 [1200]	5 [1500]	6 [1800]	7 [2100]
Recommended Load lb [kg]	1000 [454]	900 [408]	700 [318]	600 [272]	—
Recommended Load lb [kg]	3100 [1406]	2730 [1238]	2430 [1102]	2170 [984]	1750 [794]
Recommended Load lb [kg]	3500 [1588]	3100 [1406]	2700 [1225]	2400 [1089]	2100 [953]

[A] Table 3 is usable for slotted angle aluminum with flange dimensions that are ±⅛ in. [±3 mm] the flange sizes stated.
[B] On spans of this length, cross bracing gives a better structure, higher recommended load.

TABLE 4 Allowable Load Per Inch of Floorboard Width for Groups II, III, and IV Woods[A]

Length Between Outside Skids in. (mm)	Floorboard Thickness in. [mm]			
	¾ [19]	1½ [38]	2½ [64]	3½ [89]
	lb [kg]	lb [kg]	lb [kg]	lb [kg]
11 ¾ [299]	48 [21]	220 [99]	574 [260]	1095 [496]
17 ¾ [451]	32 [14]	147 [66]	382 [173]	731 [331]
23 ⅝ [600]	24 [10]	110 [49]	287 [130]	548 [248]
29 ½ [749]	19 [8]	88 [39]	229 [103]	438 [198]
35 ½ [902]	16 [7]	73 [33]	192 [87]	365 [165]
41 ⅜ [1051]	14 [6]	63 [28]	164 [74]	313 [141]
45 ¼ [1149]	12 [5]	55 [24]	144 [65]	274 [124]
59 [1499]	9 [4]	44 [19]	115 [52]	219 [99]
70 ⅞ [1800]	8 [3]	37 [16]	96 [43]	182 [82]

[A] If Group III or IV woods are used, the above allowable loads may be increased by 20 %.

7.4.2.2 *Full Diagonal Braces*—Full diagonal braces shall extend from one corner diagonally across to the other corner of the panel being braced. The braces shall be installed as close as possible to the angle apex and shall be secured at each end with one bolt (minimum).

7.4.2.3 *Short or Corner Braces*—Short or corner braces shall be placed in each panel corner being braced and secured at each end with one bolt (minimum). The braces shall be installed at a 45° angle or as close to that angle as possible.

7.4.2.4 *Steel Strapping Braces*—Flat steel strapping placed in tension in full cross or "X" braces (Fig. 3) may be used when vertical frame or other crate members interfere with diagonal brace placement, or when it is determined that this type of bracing meets minimum bracing requirements. Steel strapping shall not be less than 1¼-in. [32-mm] wide by 0.032-in. [0.8-mm] thick and shall comply with 6.1.3. The bolt holes in the strapping shall be drilled or die punched and shall be no larger than required for the bolt. The bolt hole shall be placed in the center of the strap and shall not be closer than half the strap width to the end.

7.4.3 *Structural Joints*—Horizontal, vertical, and lateral members ends shall be bolted together to form the corner joints as shown in Fig. 4. Intermediate vertical, horizontal, and intermediate lateral members shall be bolted together to construct the joints as illustrated in Fig. 1. Additional vertical or horizontal members, which are provided for shock and

AVA Documents
Document Sharing Hub

Full document details: ASTM D6255/D6255M-18

TABLE 5 Required Ventilating Areas for Plywood or Veneer Sheathed Crates

Crate Volume ft^3 [m^3]	Ventilating Space Area Required in Each Crate End or Side in.^{2} [mm^2]
0–100 [0–2.8]	7 [4 516]
100–150 [2.8–4.3]	10 [6 451]
150–200 [4.3–5.7]	14 [9 032]
200–400 [5.7–11.3]	27 [17 419]
400–600 [11.3–17]	40 [25 806]
600–800 [17–22.7]	54 [34 839]
800–1000 [22.7–28.3]	66 [42 581]
1000–1200 [28.3–34]	81 [52 258]
Over 1200 [Over 34]	101 [65 161]

TABLE 6 Approximate Metal Gage Thickness

	Gage				
	12	13	14	18	22
Approximate Thickness in. [mm]	0.1046 [2.657]	0.0897 [2.278]	0.0747 [1.897]	0.0478 [1.214]	0.0299 [0.759]

vibration mounts, shall be secured using two bolts (minimum) in the slotted angle wide flange and one bolt in the narrow flange. It may be necessary to use short pieces of slotted angle to construct this type of joint (see Fig. 1 and Fig. 5). Forklift truck handling and load bearing members shall be joined to the lower horizontal member with two bolts (minimum) at each end.

7.5 *Type I, Style A Crate*—This simply fabricated crate usually consists of one panel to each section and requires minimum bracing. Type I, Style A crates are used for lightweight, bulky, and small items not exceeding 165 lb [75 kg], as shown in Figs. 6 and 7. Crate dimensions shall not exceed 78¾-in. [2000-mm] length by 29½-in. [750-mm] width by 47¼-in. [1200-mm] height, except when specific designs are approved by the purchaser.

7.5.1 *Crate Sides*— Crate sides shall consist of horizontal members (side rails), vertical members (struts), and diagonal braces.

7.5.1.1 *Intermediate Struts*—Intermediate struts shall be required when the spacing between the struts exceeds 1⅓ the crate height. Intermediate struts, when required, shall be evenly and systematically spaced along the length of the crate side between the end struts. Where greater side strength or special mounting provisions are required along the crate side, extra intermediate struts may be added.

7.5.1.2 *Crate Side Assembly*—The metal angle used for the side rails shall be positioned with the slotted angle wide flange in a vertical position. The struts shall be uniform in length and bolted to the side rails' inside edge. When the packed item is to be placed in an upright position and anchored to the crate base, all struts shall be positioned with the slotted angle wide flange against the crate side rails' wide flange.

7.5.2 *Crate Ends*—The crate ends shall consist of slotted angle lateral (cross) members and braces joining the two crate sides. Two cross members (minimum), one joining the sides' top corners and one joining the sides' bottom corners, shall be used on each end. Additional cross members or intermediate struts may be added to the crate end as required to provide mounting or attachment points within the crate for specific items.

7.5.2.1 *Intermediate Cross Members*—The distance between cross members shall not exceed 1⅓ the crate width. When required, intermediate cross members shall be spaced evenly and systematically along the end height.

7.5.3 *Crate Base*—The base shall consist of flooring, cross members, load-bearing members, and braces as required.

7.5.3.1 *Flooring*—Although the flooring need not be continuous throughout the base, it shall be placed in areas to provide protection to the contained item from damage by forklift trucks or other material handling equipment. Plywood flooring, except load-bearing floorboards, shall have a minimum thickness of ¼ in. [6 mm] for crates through 11⅞ in. [300 mm] wide, ⅜ in. [9 mm] for crates over 11⅞ in. [300 mm] wide through 23⅝ in. [600 mm], and ¾ in. [19 mm] for crates over 23⅝ in. [600 mm] wide. Flooring shall be cut to fit in place. The flooring shall be bolted to the crate lower side rails with bolts as specified in 6.1.2 and as shown in Fig. 8, unless a removable superstructure is specified (see Fig. 9). Each piece of flooring shall be bolted in place with two bolts (minimum) in each lower side rail. The distance between bolts used to secure the flooring to side rails shall not exceed 11⅞ in. [300 mm]. When ⅜ in. [10 mm] or thinner plywood is used for flooring, a minimum ¾ by 1⅜-in. [19 by 29-mm] wood hold-down strip shall be used on top of the flooring. The bolts shall pass through the hold-down strip, flooring, and side rail. Bolts used for securing floorboards shall not be less than 5⁄16-in. [8-mm] diameter.

7.5.3.2 *Load-Bearing Members*—Load-bearing members shall be wood, plywood, metal, or a combination of wood and metal. The members shall be placed in a crosswise position to the crate length and bolted to the lower side rail with bolts as specified in 6.1.2. When wood is used for load-bearing members, the size and thickness shall be determined by Table 4. When slotted metal angle is used for load-bearing members, the size shall be determined by Tables 1-3.

7.5.3.3 *Cross Members*— The slotted-angle cross member minimum strength and quality for the base shall not be lower than the slotted angle used in the side rails and struts. The maximum distance between base cross members shall not exceed 25⁹⁄₁₆ in. [649 mm]. When load-bearing members are used, they shall be considered adequate for cross member requirements and other cross members spaced accordingly.

7.5.3.4 *Braces*—Crate base braces shall be of the same material as cross members. Braces will not be required when ⅓ of the base is floored with 11⅞ in. [300 mm] or wider floor panels.

7.5.4 *Crate Top*—The crate top shall consist of metal angle cross members, cross ties, and braces installed between the two crate sides.

7.5.4.1 *Crate Top Cross Members*—Cross members shall be located at the same point along the length of the crate where the struts are located (see Fig. 1). Cross members shall be bolted to the upper side rails with bolts as specified in 6.1.2.

AVA Documents
Document Sharing Hub

Full document details: ASTM D6255/D6255M-18

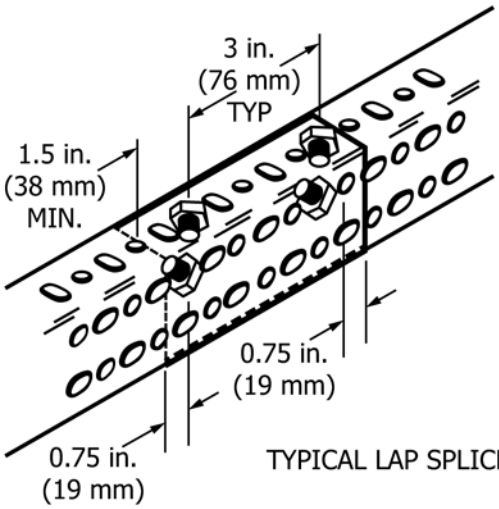

TYPICAL LAP SPLICE

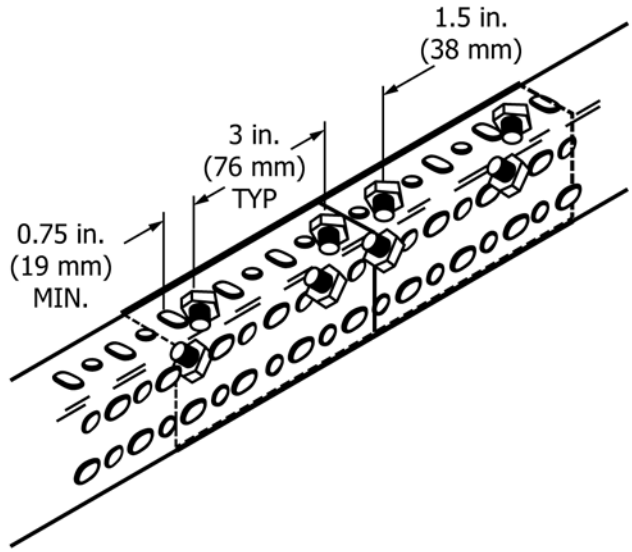

TYPICAL BUTT SPLICE

JOINING OF MEMBERS
TYPICAL METHOD OF ATTACHING VERTICAL SIDE MEMBERS, CROSS MEMBERS & CROSS TIE MEMBERS TO SIDE RAILS OF CRATE.

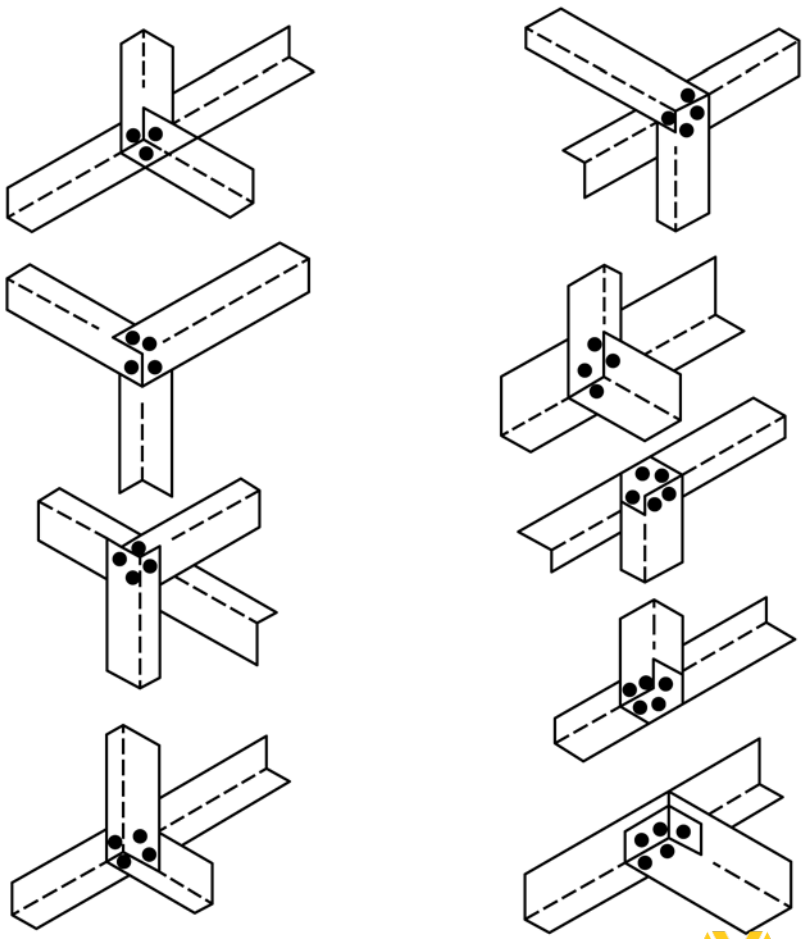

FIG. 1 Splices and Joining of Members

Documents
Document Sharing Hub

Full document details: ASTM D6255/D6255M-18