This international standard was developed in accordance with internationally recognized principles on standardization established in the Decision on Principles for the Development of International Standards, Guides and Recommendations issued by the World Trade Organization Technical Barriers to Trade (TBT) Committee.

Designation: D6381/D6381M – 24

Standard Test Method for Measurement of Asphalt Shingle Mechanical Uplift Resistance[1]

This standard is issued under the fixed designation D6381/D6381M; the number immediately following the designation indicates the year of original adoption or, in the case of revision, the year of last revision. A number in parentheses indicates the year of last reapproval. A superscript epsilon (ε) indicates an editorial change since the last revision or reapproval.

1. Scope

1.1 This test method covers measuring the uplift resistance of asphalt roofing shingles by mechanical means. It is applicable to shingles that use a factory-applied or field-applied sealant.

1.2 There are several types of shingles designed for service without a factory-applied or field-applied sealant. These shingles, when applied in accordance with the manufacturers' application instructions, employ other means to provide resistance against the forces generated by the action of wind such as geometry and shingle construction. Field experience has shown that these types of shingles function satisfactorily in service. Because there are a variety of these shingle designs, it is not practical to describe in this test method how to test these shingles for uplift resistance. The testing of these types of shingles, therefore, goes beyond the scope of this test method.

1.3 This test method describes two procedures for measuring shingle uplift resistance. Procedure A employs a specially designed apparatus with a clamping device which facilitates lifting of the edge of the shingle and measuring the force required to break the seal. Procedure B employs a metal "T" section adhered to the weather surface of the shingle to facilitate application and measurement of a perpendicular force to break the seal.

1.4 It is not prohibited to use this test method over a range of sealing time and temperature combinations and testing temperatures to simulate a variety of actual field use conditions. The times and temperatures used shall be stated in the report.

1.5 The values stated in either SI units or inch-pound units are to be regarded separately as standard. The values stated in each system may not be exact equivalents; therefore, each system shall be used independently of the other. Combining values from the two systems may result in nonconformance with the standard.

1.6 *This standard does not purport to address all of the safety concerns, if any, associated with its use. It is the responsibility of the user of this standard to establish appropriate safety, health, and environmental practices and determine the applicability of regulatory limitations prior to use.*

1.7 *This international standard was developed in accordance with internationally recognized principles on standardization established in the Decision on Principles for the Development of International Standards, Guides and Recommendations issued by the World Trade Organization Technical Barriers to Trade (TBT) Committee.*

2. Referenced Documents

2.1 *ASTM Standards:*[2]

D228/D228M Test Methods for Sampling, Testing, and Analysis of Asphalt Roll Roofing, Cap Sheets, and Shingles Used in Roofing and Waterproofing

D1079 Terminology Relating to Roofing and Waterproofing

D3462/D3462M Specification for Asphalt Shingles Made from Glass Felt and Surfaced with Mineral Granules

D7158/D7158M Test Method for Wind Resistance of Asphalt Shingles (Uplift Force/Uplift Resistance Method)

3. Terminology

3.1 *Definitions*—For definitions of terms used in this test method, refer to Terminology D1079.

3.2 *Definitions of Terms Specific to This Standard:*

3.2.1 *seal—as it relates to steep roofing shingles*, is the bonding that results from the activation of the sealant under the action of time and temperature.

3.2.2 *sealant—as it relates to steep roofing shingles*, is defined as factory-applied or field-applied material designed to seal the shingles to each other under the action of time and temperature after the shingles are applied to a roof.

3.2.3 *sealed—as it relates to steep roofing shingles*, is the condition of the shingles after the sealant has been activated by the action of time and temperature.

[1] This test method is under the jurisdiction of ASTM Committee D08 on Roofing and Waterproofing and is the direct responsibility of Subcommittee D08.02 on Steep Roofing Products and Assemblies.

Current edition approved Jan. 1, 2024. Published January 2024. Originally approved in 1999. Last previous edition approved in 2020 as D6381/D6381M – 15 (2020). DOI: 10.1520/D6381_D6381M-24.

[2] For referenced ASTM standards, visit the ASTM website, www.astm.org, or contact ASTM Customer Service at service@astm.org. For *Annual Book of ASTM Standards* volume information, refer to the standard's Document Summary page on the ASTM website.

Copyright © ASTM International, 100 Barr Harbor Drive, PO Box C700, West Conshohocken, PA 19428-2959. United States

Documents
Document Sharing Hub
Full document details: ASTM D6381/D6381M-24

4. Summary of Test Method

4.1 The test specimens are constructed from pieces of shingles, overlaid and sealed prior to testing. All specimens are then conditioned and tested at selected temperatures. Specimens are tested in Procedure A by lifting the exposed edge and recording the uplift force required to break the seal, and in Procedure B by recording the perpendicular force required to break the seal.

5. Significance and Use

5.1 Uplift resistance is one of the properties of an applied shingle that relates to its ability to withstand wind forces. The mechanical tests described are laboratory methods to measure that resistance at a designated temperature after the shingles have been sealed under designated conditions.

5.1.1 This test method determines the mechanical uplift resistance of sealed shingles by direct measurement in a prescribed manner. See Test Method D7158/D7158M for the relationship between this mechanical uplift resistance and the uplift forces derived from the action of wind.

5.2 Many factors influence the sealing characteristics of shingles in the field; for example, temperature, time, contamination by dirt and debris, roof slope, and interference by misplaced fasteners. It is not the objective of this test method to address all of these influences. This test method is designed to determine the mechanical uplift resistance when representative specimens of shingles are sealed under selected conditions prior to testing.

5.3 Procedure A produces lower results than Procedure B. Procedure A provides an edge-lift load value and Procedure B provides a perpendicular load value. The procedure applicable to a specific product depends on the specific product design, geometry, and rigidity. It is the responsibility of the user of this test method to determine the appropriate procedure with reference to the specific product and application. It is possible that engineering calculations would require both procedures to be employed, and for both results to be used in the calculation of the resistance of that specific product to the effects of wind.

5.4 When using this method in conjunction with Test Method D7158/D7158M to determine the uplift resistance of shingles as part of the determination of wind resistance of the shingles, determine the appropriate procedure (Procedure A, Procedure B, or both) in accordance with the discussion, and examples, of shingle geometry and sealant configuration in Section 12.2 of Test Method D7158/D7158M.

6. Apparatus

6.1 *Tensile Testing Machine,* shall be a constant-rate-of-extension (CRE) type.

6.2 *Heavy-Duty Paper Cutter,* steel rule, die, or template 95 by 114 mm [3¾ by 4½ in.] and 95 by 178 mm [3¾ by 7 in.] for Procedure A, and 102 by 152 mm [4 by 6 in.] and 95 by 38 mm [3¾ by 1½ in.] for Procedure B.

6.3 The test fixture for Procedure A is a specially designed apparatus.[3] Fig. 1 is a photo of the apparatus assembled in a typical tensile testing machine. Fig. 2 is a drawing of the apparatus. Fig. 3 is a schematic of the apparatus.

6.4 The test fixture for Procedure B is identical to that used to determine fastener pull-through resistance in Specification D3462/D3462M, except that a 3 mm [⅛ in.] thick aluminum mask 102 by 152 mm [4 by 6 in.] with a central opening 44 by 102 mm [1¾ by 4 in.] is used to restrain the specimen, and a 95 mm [3¾ in.] length of 38 mm [1½ in.] aluminum "T" section is used to apply the perpendicular uplift force to the specimen. Two 127 mm [5 in.] equal lengths of chain form a

[3] The sole source of supply of the apparatus known to the committee at this time is Ashcraft Machine and Supply, 185 Wilson St., Newark, Ohio 43055, and specified on the drawings for the apparatus. If you are aware of alternative suppliers, please provide this information to ASTM International Headquarters. Your comments will receive careful consideration at a meeting of the responsible technical committee,[1] which you may attend.

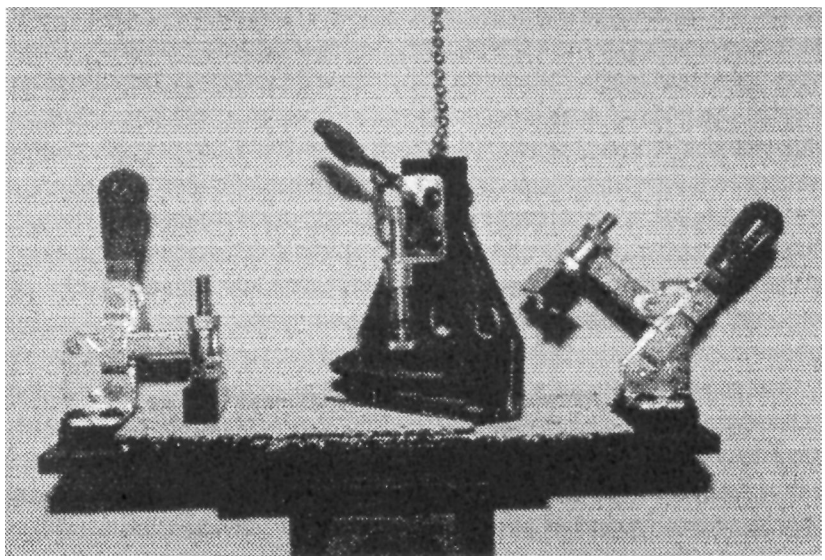

FIG. 1 Shingle Uplift Test Apparatus—Procedure A

Documents
Document Sharing Hub

Full document details: ASTM D6381/D6381M-24

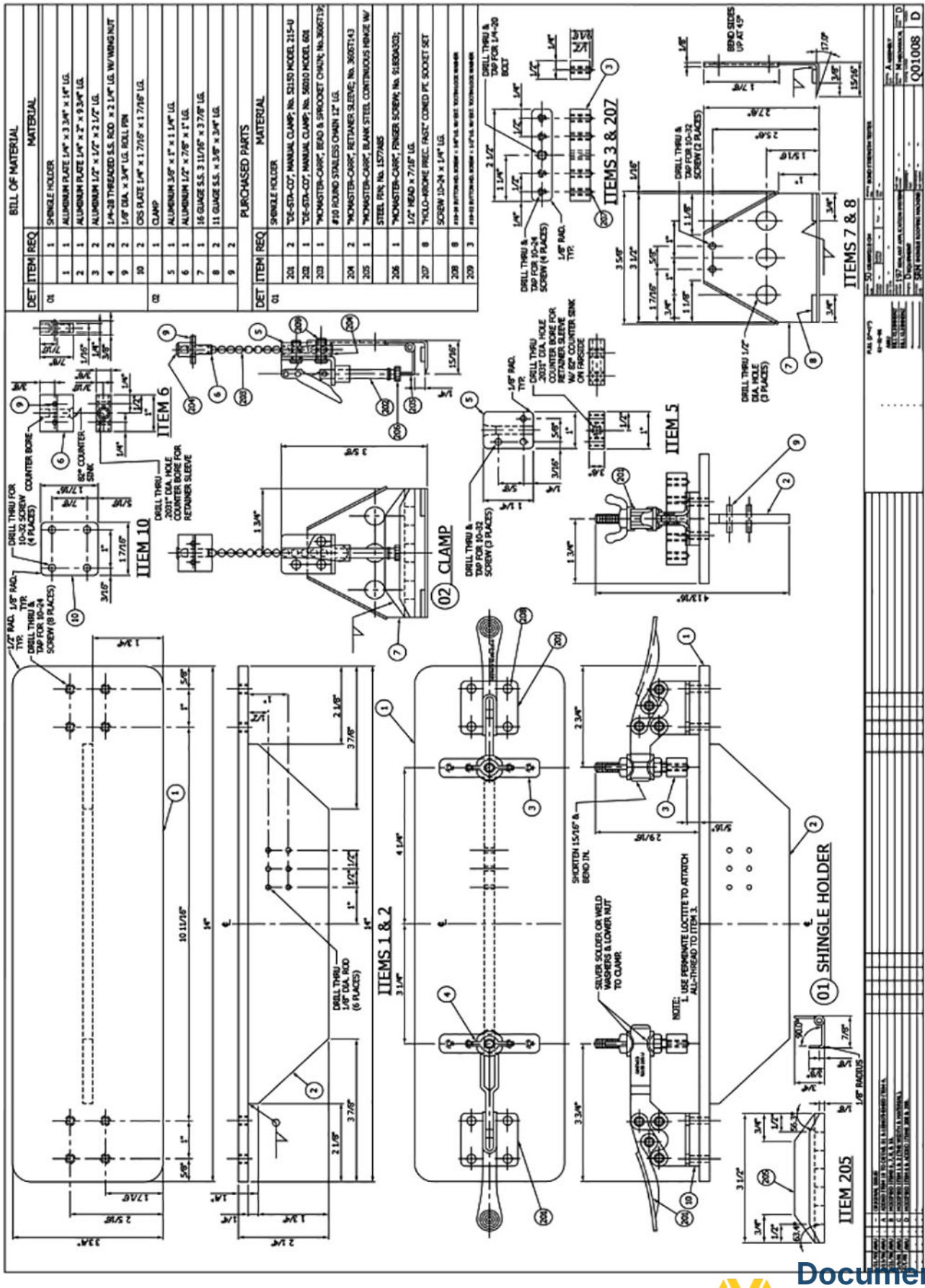

FIG. 2 Drawing of Uplift Test Apparatus—Procedure A

AVA Documents
Document Sharing Hub

Full document details: ASTM D6381/D6381M-24

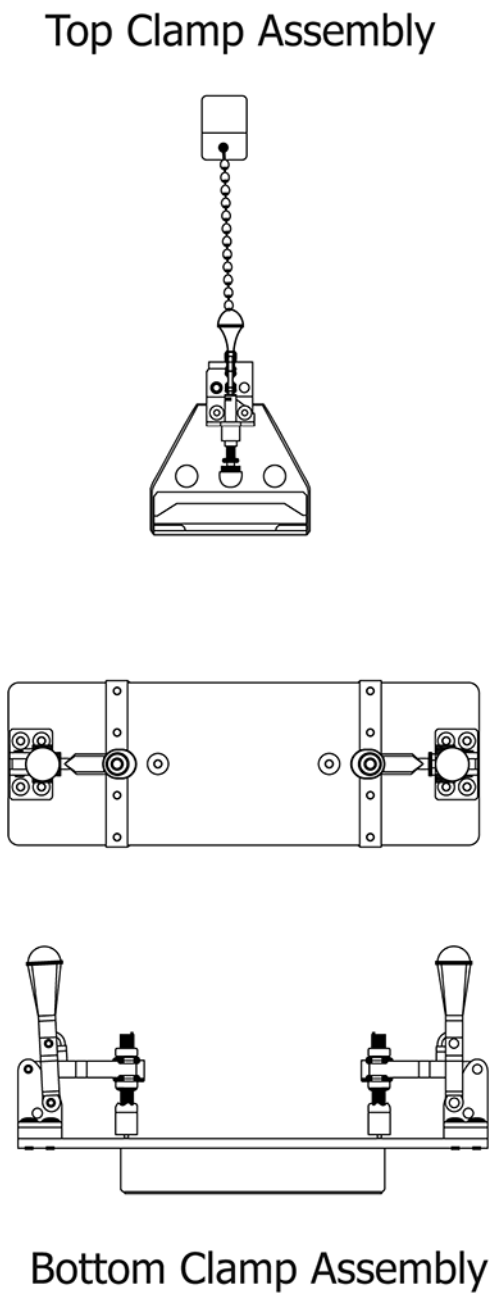

FIG. 3 Schematic of the Top and Bottom Clamp Assemblies of the Uplift Test Apparatus—Procedure A (The bottom clamp assembly is shown in both plan and side views for clarity)

bridle that is hooked into holes drilled in the web of the "T" section. Fig. 4 is a photo of the apparatus in a typical tensile testing machine with a specimen in place.

6.4.1 The two chains are suspended from a common closed S-hook that is pinned, but free to rotate, in the upper fixture of the test machine. Open S-hooks attached to the end of each chain are inserted into holes drilled 6 mm [¼ in.] from each end and 13 mm [½ in.] from the top of the web of the "T" section. This arrangement of hooks and chains forms a free-swinging bridle that ensures perpendicular force application and minimizes inducement of peeling forces, even when the test specimens are not uniformly sealed along their length.

6.5 *Temperature-Controlled Chamber,* to seal the specimens, capable of maintaining a temperature within ±1.5 °C [±2.5 °F] of the selected temperature. The sample tray shall be a rigid support large enough to hold specimens in the chamber.

Documents
Document Sharing Hub
Full document details: ASTM D6381/D6381M-24