NOTICE: This standard has either been superseded and replaced by a new version or withdrawn.
Contact ASTM International (www.astm.org) for the latest information

Designation: D 6418 – 04

Standard Practice for Using the Disposable En Core Sampler for Sampling and Storing Soil for Volatile Organic Analysis[1]

This standard is issued under the fixed designation D 6418; the number immediately following the designation indicates the year of original adoption or, in the case of revision, the year of last revision. A number in parentheses indicates the year of last reapproval. A superscript epsilon (ϵ) indicates an editorial change since the last revision or reapproval.

1. Scope

1.1 This practice is intended for application to soils that may contain volatile waste constituents.

1.2 This practice provides a procedure for using the disposable En Core[2] sampler to collect and store a soil sample for volatile organic analysis.

1.3 It is recommended that this standard be used in conjunction with Guide D 4547 and Guide D 4687.

1.4 *This standard does not purport to address all of the safety concerns, if any, associated with its use. It is the responsibility of the user of this standard to establish appropriate safety and health practices and determine the applicability of regulatory limitations prior to use.*

NOTE 1—ASTM takes no position respecting the validity of any patent rights asserted in connection with any item mentioned in this standard. Users of this standard are expressly advised that determination of the validity of any such patent rights, and the risk of infringement of such rights, are entirely their own responsibility.

2. Referenced Documents

2.1 *ASTM Standards:* [3]

D 2777 Practice for Determination of Precision and Bias of Applicable Methods of Committee D-19 on Water

D 4547 Guide for Sampling Waste and Soils for Volatile Organics

D 4687 Guide for General Planning of Waste Sampling

D 5792 Practice for Generation of Environmental Data Related to Waste Management Activities: Development of Data Quality Objectives

3. Summary of Practice

3.1 This practice provides a procedure for using the disposable En Core sampler to collect and store a soil sample of approximately 5 or 25 g for volatile organic analysis. The En Core sampler, which consists of a coring body/storage chamber, O-ring sealed plunger, and O-ring sealed cap, is designed to collect and hold a soil sample during shipment to the laboratory for analysis.

3.2 After the sample is collected in the En Core sampler, the coring body/storage chamber is sealed with a slide-on cap and immediately becomes a sample storage chamber. To minimize loss of volatile compounds due to volatilization, or biodegradation, or both, from the time of collection until analysis or chemical preservation in the laboratory (see Guide D 4547), sample storage options are specified at 4 ± 2°C for up to 48 h; at –7 to –21°C for up to 14 days; or at 4 ± 2°C for up to 48 h followed by storage at –7 to –21°C for up to five days (see Appendix X1 and reports referenced in footnotes 4, 5, and 6 for information on the performance of the En Core sampler under these storage conditions).[4,5,6] Storage of samples in the En Core sampler at 4 ± 2°C or –7 to –21°C for longer holding times than those listed above is an option, provided it can be shown that the longer storage time used does not influence the concentrations of the volatile organic compounds (VOCs) of interest in the samples, or that the data generated by analysis of the samples meet the data quality objectives (DQOs) (see Practice D 5792). This practice does not use methanol preservation or other chemical preservatives in the field.

4. Significance and Use

4.1 This practice is for use in collecting and storing 5- or 25-g soil samples for volatile organic analysis in a manner that minimizes loss of contaminants due to volatilization, or biodegradation, or both. The En Core sampler serves as both the sampling device and sample storage chamber.

[1] This practice is under the jurisdiction of ASTM Committee D34 on Waste Management and is the direct responsibility of Subcommittee D34.01.03 on Sampling Equipment.

Current edition approved Feb. 1, 2004. Published April 2004. Originally approved in 1999 as D 6418 – 99. Last previous edition approved in 2003 as D 6418 – 03.

[2] En Core is a registered trademark of En Novative Technologies, Inc., Green Bay, WI. The En Core sampler is covered by a patent. Interested parties are invited to submit information regarding the identification of an alternative(s) to this patented item to the ASTM Headquarters. Your comments will receive careful consideration at a meeting of the responsible technical committee, which you may attend.

[3] For referenced ASTM standards, visit the ASTM website, www.astm.org, or contact ASTM Customer Service at service@astm.org. For *Annual Book of ASTM Standards* volume information, refer to the standard's Document Summary page on the ASTM website.

[4] Hewitt, A. D., Frozen Storage of Soil Samples for Volatile Organic Compound Analysis, *Environmental Testing and Analysis*, Vol 8, No. 5, 1999, pp. 18–25.

[5] A copy of the research report describing the study performed to evaluate the precision of the En Core sampler to store low VOC concentrations is available from ASTM Headquarters. Request RR: D34–1014.

[6] A copy of the research report describing the study performed to evaluate the performance of the En Core sampler at –7 ± 1°C and –21 ± 2°C is available from ASTM Headquarters. Request RR: D34-1015.

Copyright © ASTM International, 100 Barr Harbor Drive, PO Box C700, West Conshohocken, PA 19428-2959, United States.

Documents
Document Sharing Hub
Full document details: ASTM D6418-04

4.2 In performing the practice, the integrity of the soil sample structure is maintained during sample collection, storage, and transfer in the laboratory for analysis or preservation.

4.3 During sample collection, storage, and transfer, there is very limited exposure of the sample to the atmosphere.

4.4 Laboratory subsampling is not required when performing this practice. The sample is expelled directly from the coring body/storage chamber into the appropriate container for analysis or preservation without disrupting the integrity of the sample. Subsampling from the En Core device should not be performed to obtain smaller sample sizes for analysis.

4.5 This practice specifies sample storage in the En Core sampler at 4 ± 2°C for up to 48 h; at –7 to –21°C for up to 14 days; or at 4 ± 2°C for up to 48 h followed by storage at –7 to –21°C for up to five days (see Appendix X1 and reports referenced in footnotes 4, 5, and 6 for information on the performance of the En Core sampler under these storage conditions).[4,5,6] Storage of samples in the En Core sampler at 4 ± 2°C or –7 to –21°C for longer holding times than those listed above is an option, provided it can be shown that the longer storage time used does not influence the concentrations of the VOCs of interest in the samples, or that the data generated by analysis of the samples meet the DQOs (see Practice D 5792).

4.6 This practice does not use methanol preservation or other chemical preservatives in the field. As a result, there are no problems associated with flammability hazards, shipping restrictions, or dilution of samples containing low volatile concentrations due to solvents being added to samples in the field.

4.7 The En Core sampler is a single-use device. It should not be cleaned, or reused, or both.

4.8 This practice cannot be used for sampling cemented material, consolidated material, or material having fragments coarse enough to interfere with proper coring techniques.

5. Apparatus

5.1 *En Core Sampler*—The En Core sampler has three components: the coring body/storage chamber, which is volumetrically designed to collect and store a soil sample of approximately 5 or 25 g; an O-ring sealed plunger for nondisruptive extrusion of the sample into an appropriate container for analysis or preservation; and, a slide-on cap having an O-ring seal and locking arm mechanism (see Fig. 1). The coring body/storage chamber of the 5-g sampler has a volume of 3 cm^3 to give a sample size of approximately 5 g, assuming a soil density of 1.7 g/cm^3. The coring body/storage chamber of the 25-g sampler has a volume of 14.5 cm^3 to give a sample size of approximately 25 g, assuming a soil density of 1.7 g/cm^3. The seals of the sampler are provided by three polytetrafluoroethylene-coated fluoroelastomer O-rings (see Fig. 1). The coring body/storage chamber, plunger, and cap of the En Core sampler are constructed of an inert composite polymer. The En Core sampler is certified as clean and should

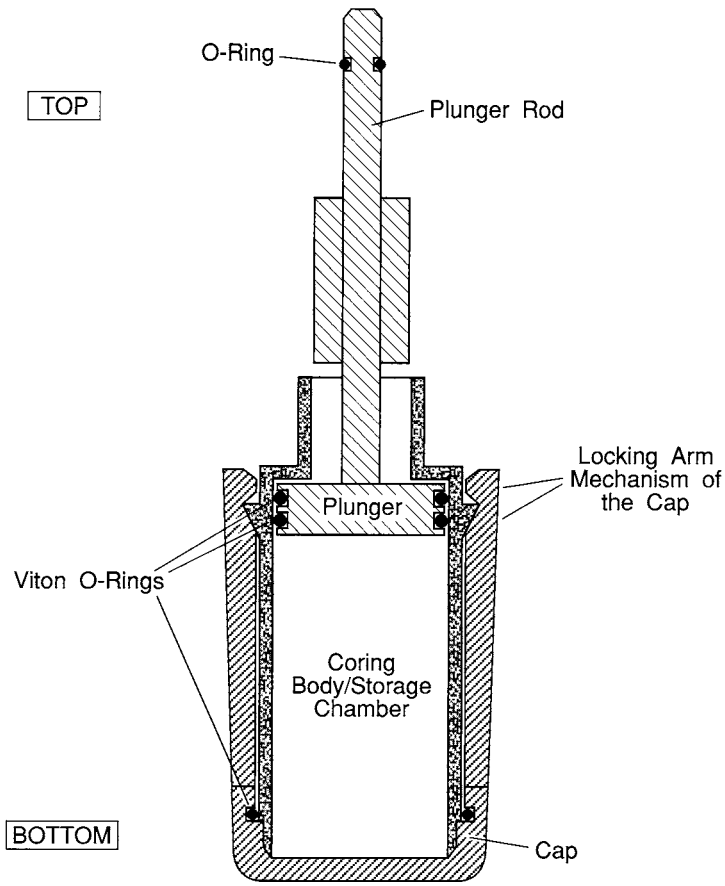

FIG. 1 Components of the En Core Sampler

Documents
Document Sharing Hub
Full document details: ASTM D6418-04

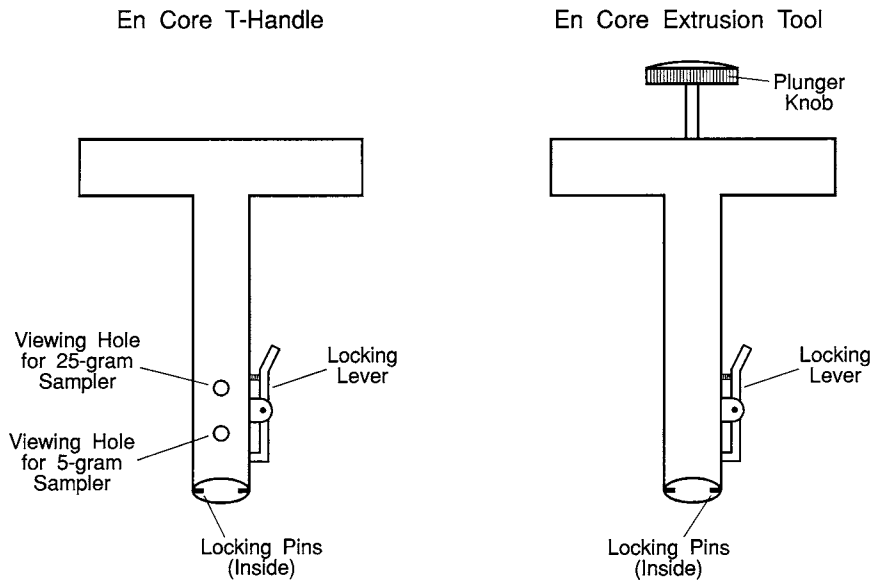

FIG. 2 Reusable Attachments to the En Core Sampler

not be reused. There are two stainless steel reusable attachments that are used with the En Core sampler. These are a T-handle, which is used to push the sampler into the soil for sample collection; and an extrusion tool, which attaches to the plunger for extrusion of the sample from the coring body/storage chamber (see Fig. 2). Each En Core sampler is supplied with a protective moisture-proof bag for shipment to the laboratory.

5.2 Cooler with ice or cold packs, or refrigerated compartment regulated at 4 ± 2°C and/or a freezer compartment regulated at a temperature within the range of –7 to –21°C.

5.3 *Minimum/Maximum Temperature Monitor*—This is any device that registers the minimum and maximum temperatures reached during a given period of time in °C and has a range that includes the specified storage temperature in divisions of 1°C, such as a minimum/maximum thermometer or temperature data logger.

6. Procedure

6.1 The size of the En Core sampler used is determined by the size of the sample required by the laboratory procedure that will be used to analyze the sample. If a sample size of approximately 5 g is required for analysis, the 5-g En Core sampler, and not the 25-g device, should be used to collect and store the sample. Subsampling from the En Core devices should not be performed to obtain smaller sample sizes for analysis.

6.2 If volatile contaminant levels in the soil being sampled are not known, it is recommended that three samples be collected at each sampling location using three En Core samplers. If determination of moisture content is required for reporting sample results on a dry weight basis, a fourth sample should be collected from each sampling location using a suitable container. The proper sample preparation method for low-level or high-level volatile analysis[7,8] can be determined by screening one of the three samples collected in the En Core samplers for high or low concentrations of VOCs. If a high concentration is present, one of the remaining samples in the En Core devices can be extruded into methanol for high-level analysis; if a low concentration is present, the two remaining samples in the En Core devices can be extruded into two appropriate vials for low-level analysis giving an additional low-level sample for analysis, if needed. For guidance on sample collection, sample handling, and sample preparation methods for volatile organic analysis, see Guide D 4547. For quality assurance considerations related to field sampling, see Guide D 4687.

6.3 As stated in 4.8, the En Core device cannot be used for sampling cemented material, consolidated material, or material having fragments coarse enough to interfere with proper coring techniques.

6.4 *Sample Collection*—The manufacturer's specific instructions for operating the En Core sampler and T-handle to collect a soil sample should be followed. The steps involved in sample collection using the En Core sampler are given below.

6.4.1 Before collecting a sample in the En Core sampler, the plunger rod (see Fig. 1) should be positioned so that the plunger can be moved freely from the top to the bottom of the coring body/storage chamber. For sample collection, the T-handle (see Fig. 2) should be attached to the sampler, and the plunger should be positioned so that the bottom of the plunger

[7] U.S. EPA, 1996, Method 5035: Closed-System Purge-and-Trap and Extraction for Volatile Organics in Soil and Waste Samples. *Test Methods for Evaluating Solid Waste: Physical/Chemical Methods (SW-846)*, Vol 1B, Final Update III.

[8] U.S. EPA, 1996, Method 5021: Volatile Organic Compounds in Soils and Other Solid Matrices Using Equilibrium Headspace Analysis. *Test Methods for Evaluating Solid Waste: Physical/Chemical Methods (SW-846)*, Vol 1B, Final Update III.

AVA Documents
Document Sharing Hub

Full document details: ASTM D6418-04

is flush with the bottom of the coring body/storage chamber. This prevents air from being trapped in the device during sample collection. When inserting a coring device into a surface for sample collection, air should not be trapped behind the sample. If this occurs, air can pass through the soil causing VOCs to be lost, or it can cause the sample to be prematurely pushed from the coring device.

6.4.2 Sample collection should be performed as quickly as possible. Using the T-handle, push the En Core sampler into the soil until the coring body/storage chamber is completely full. It can be verified that the coring body/storage chamber is full by looking into the appropriate viewing hole (either 5 or 25-g) in the T-handle (see Fig. 2). The coring body/storage chamber is completely full if the small O-ring on the plunger rod (see Fig. 1) is centered in the T-handle viewing hole. If possible, look at the viewing hole while the device is in the soil to check if the coring body/storage chamber is completely full. If it is not possible to view the hole when the device is in the soil, remove the sampler from the soil to view the hole. If the coring body/storage chamber is not completely full, quickly insert the device back into the same sampling spot and push harder to fill the coring body/storage chamber. When the coring body/storage chamber is completely full, scrape a spatula across the bottom of the coring body/storage chamber so the surface of the soil in the sampler is flush with the opening of the coring body/storage chamber (see Note 2). Quickly wipe the external surface of the coring body/storage chamber with a clean tissue or cloth. After ensuring that the sealing surfaces are clean, cap the coring body/storage chamber while it is still on the T-handle. This is done by gently sliding the cap onto the coring body/storage chamber with a twisting motion. The cap is locked into position when the grooves on the locking arms seat over the ridge on the coring body/storage chamber (see Fig. 1). If the cap of the En Core sampler is difficult to lock into position, the O-ring in the cap (see Fig. 1) may be bent out of position, and a new cap should be used to seal the device. A bent O-ring in the cap may result in loss of VOCs from the stored sample (see 8.2.2). After the cap is locked into position, the T-handle is removed from the sampler, and the plunger is locked into position by rotating the plunger rod (see manufacturer's specific operating instructions).

NOTE 2—For drier soils that are difficult to compact in the sampler, scraping a spatula across the surface of the soil to make it flush with the opening of the coring body/storage chamber may loosen particles of the soil in the coring body/storage chamber. These particles may scatter when the device is capped and may affect the seal between the cap and coring body/storage chamber (see 8.2.2). Caution should be used when working with these types of soils to prevent this from happening.

6.4.3 A sample label showing the sample number is attached to the cap of the En Core sampler, and the sampler is placed in its protective moisture-proof shipping bag (provided with each En Core sampler). This bag has a label attached for recording sample name, date collected, comments, and sample number.

6.5 *Sample Storage*—The capped coring body immediately becomes a sealed sample storage chamber. A sample can be stored in the sealed coring body/storage chamber at 4 ± 2°C for up to 48 h; at –7 to –21°C for up to 14 days; or at 4 ± 2°C for up to 48 h followed by storage at –7 to –21°C for up to five days (see Appendix X1 and reports referenced in footnotes 4, 5, and 6 for information on the performance of the En Core sampler under these storage conditions).[4,5,6] Storage of samples in the En Core sampler at 4 ± 2°C or –7 to –21°C for longer holding times than those listed above is an option, provided it can be shown that the longer storage time used does not influence the concentrations of the VOCs of interest in the samples, or that the data generated by analysis of the samples meet the DQOs (see Practice D 5792). Data showing performance of the En Core sampler as a storage chamber for samples of soil stored under a variety of conditions, including 4 ± 2°C for 48 h; –7 ± 1°C for 14 days; –12 ± 2°C for 14 days; –21 ± 2°C for 14 days; 4 ± 2°C for 48 h followed by storage at –7 ± 1°C for five days; 4 ± 2°C for 48 h followed by storage at –12 ± 2°C for five days; and 4 ± 2°C for 48 h followed by storage at –21 ± 2°C for five days, are given in Appendix X1.

6.5.1 Storage of samples at 4 ± 2°C can be achieved by placing the protective shipping bag, in which the En Core sampler has been placed, in a cooler with ice or cold packs, or in a refrigerated compartment regulated at 4 ± 2°C. For storage at –7 to –21°C, the En Core sampler should be stored in a freezer compartment regulated at a temperature within the range of –7 to –21°C. A minimum/maximum temperature monitor, such as a minimum/maximum thermometer or temperature data logger should be placed with the samples during storage to verify that the temperature requirement is maintained.

6.6 Arrangements with the receiving laboratory for sample log in, sample handling, required storage conditions, and analysis should be made.

6.7 *Extrusion of the Soil Sample from the En Core Sampler*—The manufacturer's specific instructions for operating the En Core sampler and extrusion tool to extrude the soil sample from the coring body/storage chamber should be followed. The steps involved in sample extrusion from the En Core sampler are outlined in 6.7.1.

6.7.1 At the laboratory, the soil is transferred into the appropriate container without disturbing the integrity of the sample by removing the cap from the coring body/storage chamber and using the plunger to expel the soil into the receiving container (see Note 3). This is done by performing the following steps in accordance with the manufacturer's specific operating instructions: attach the extrusion tool (see Fig. 2) to the En Core sampler; rotate the extrusion tool plunger knob into position for sample extrusion; unlock the locking arms of the cap; carefully remove the cap from the sampler; and, push down on the plunger knob of the extrusion tool (see Fig. 2) to expel the sample from the coring body/storage chamber directly into the appropriate container for analysis or preservation (see Guide D 4547). After the sample is expelled from the En Core sampler, the O-ring in the sampler cap should be inspected to make sure that the O-ring was not bent when the cap was placed on the coring body/storage chamber. A bent

AVA Documents
Document Sharing Hub

Full document details: ASTM D6418-04

O-ring in the sampler cap can result in loss of VOCs from the stored sample and should be documented (see 8.2.2).

NOTE 3—Samples that have been stored at –7 to –21°C should be allowed to sit at room temperature for 2 to 3 min before extrusion from the En Core sampler, which will facilitate extrusion of the frozen sample from the device.

7. Report

7.1 For guidance on information that should be recorded for a sampling activity, see Guide D 4687.

8. Precision and Bias

8.1 *Precision*—The estimated percent relative standard deviations of low-level (<200 µg/Kg) concentrations of methylene chloride ($MeCl_2$), methyl tert-butyl ether (MTBE), 1,1-dichloroethane, cis-1,2-dichloroethylene (CDCE), chloroform, benzene, trichloroethylene (TCE), toluene, tetrachloroethylene (PCE), ethyl benzene, and o-xylene due to storage of spiked samples of two different soils in the 5-g and 25-g En Core samplers have been shown to range from 0 to 10 % for the following conditions: 4 ± 2°C for 48 h; 4 ± 2°C for seven days; –12 ± 2°C for seven days; –12 ± 2°C for 14 days; 4 ± 2°C for 48 h followed by –12 ± 2°C for five days; and 4 ± 2°C for 48 h followed by –12 ± 2°C for twelve days. For storage of samples at 4 ± 2°C for 14 days, these values range from 0 to 14 % for the compounds listed above. For vinyl chloride, the values range from 0 to 14 % for all of the storage conditons.[5]

8.2 *Bias*—No information can be given on the bias of the sampling/storage procedure described in this practice because there is no standard reference material for sampling soil for VOCs in the field.

8.2.1 Data have been generated to provide information on the performance of the En Core sampler for storage of soil samples spiked with VOCs at low-level concentrations of approximately 100 µg/Kg. Performance of the device for storage of the spiked soil at 4 ± 2°C for 48 h, at 4 ± 2°C for seven days, at 4 ± 2°C for 14 days, at –7 ± 1°C for 14 days, at 4 ± 2°C for 48 h followed by storage at –7 ± 1°C for five days, at –12 ± 2°C for seven days, at –12 ± 2°C for 14 days, at 4 ± 2°C for 48 h followed by storage at –12 ± 2°C for five days, at 4 ± 2°C for 48 h followed by storage at –12 ± 2°C for 12 days, at –21 ± 2°C for 14 days, and at 4 ± 2°C for 48 h followed by storage at –21 ± 2°C for five days has been evaluated. Data from these evaluations are shown in Appendix X1.[6,9]

8.2.2 A study involving storage of soil samples spiked with VOCs at high-level concentrations of approximately 2,500 µg/Kg has also been conducted. The data and findings from this study are discussed in research report RR: D34–1012[10].

8.2.3 Data showing the performance of the 25–g disposable En Core sampler to store soil samples spiked with EPA Method 1311[11] volatile organic analytes are shown in Appendix X2.[9] Storage conditions used were 14 days at 4 ± 2°C, 14 days at –12 ± 2°C, and 48 h at 4 ± 2°C followed by 12 days at –12 ± 2°C.

9. Keywords

9.1 En Core sampler; soil sampling; storage of soil samples; volatile organic compounds (VOCs); VOC analysis

[9] Copies of the research reports on the studies described in Appendix X1 are available from ASTM Headquarters. Request RR: D34-1013 and RR: D34-1015. RR: D34-1013 also gives information on the study described in Appendix X2.

[10] A copy of the research report on the study described in 8.2.2 is available from ASTM Headquarters. Request RR:D34-1012.

[11] U.S. EPA, 1992, Method 1311, Toxicity Characteristic Leaching Procedure. *Test Methods for Evaluating Solid Waste: Physical/Chemical Methods (SW-846)*, Vol 1C.

APPENDIXES

(Nonmandatory Information)

X1. PERFORMANCE OF THE EN CORE SAMPLER TO STORE LOW-LEVEL VOC-SPIKED SOIL SAMPLES

X1.1 A study was conducted to evaluate the performance of the 5- and 25-g En Core samplers to store three different soil types spiked with an aqueous solution containing eleven volatile organic compounds (VOCs). The En Core samplers used in this study were manufactured at the end of 1999 and in 2000. The 5-g devices that were used represent lot numbers K119333, K110073, K110167, and K110259. The 25-g devices that were used represent lot numbers K119349, K110053, and K110154. The manufacturer can be contacted for information on these lot numbers.

X1.1.1 The soils used in the study are representative of different environments and contained native microbial populations. They are a river bank soil having 49 % sand, 26 % silt, 24 % clay, 5.3 % organic material, approximately 14 % moisture, and a dehydrogenase (microbial) activity of 22 mg total product formed (TPF)/g/24 h; a mountain soil having 75 % sand, 13 % silt, 12 % clay, 4.3 % organic material, approximately 12 % moisture, and a dehydrogenase activity of 11 mg TPF/g/24 h; and, a prairie soil having 67 % sand, 17 % silt, 16 % clay, 1.5 % organic material, approximately 8 % moisture, and a dehydrogenase activity of 17 mg TPF/g/24 h.

X1.1.2 The VOCs used in the study are methylene chloride ($MeCl_2$), methyl tert-butyl ether (MTBE), 1,1–dichloroethane, *cis*-1,2–dichloroethylene (CDCE), chloroform, benzene, trichloroethylene (TCE), toluene, tetrachloroethylene, (PCE), ethyl benzene, and o-xylene. These compounds were selected as the analytes of interest because they are representative of halogenated and aromatic compounds that are of environmental concern.

X1.1.3 In the study, soil samples were collected in the En Core samplers from a large container of loose soil and then spiked with an aqueous solution containing the compounds

AVA Documents
Document Sharing Hub

Full document details: ASTM D6418-04