This international standard was developed in accordance with internationally recognized principles on standardization established in the Decision on Principles for the Development of International Standards, Guides and Recommendations issued by the World Trade Organization Technical Barriers to Trade (TBT) Committee.

Designation: D6681 – 23

Standard Test Method for Evaluation of Engine Oils in a High Speed, Single-Cylinder Diesel Engine—Caterpillar 1P Test Procedure[1]

This standard is issued under the fixed designation D6681; the number immediately following the designation indicates the year of original adoption or, in the case of revision, the year of last revision. A number in parentheses indicates the year of last reapproval. A superscript epsilon (ε) indicates an editorial change since the last revision or reapproval.

INTRODUCTION

Any properly equipped laboratory without outside assistance can use the test method described in this standard. However, the ASTM Test Monitoring Center (TMC)[2] provides calibration oils and an assessment of the test results obtained on those oils by the laboratory. By this means the laboratory will know whether their use of the test method gives results statistically similar to those obtained by other laboratories. Furthermore, various agencies require that a laboratory utilize the TMC services in seeking qualification of oils against specifications. For example, the U.S. Army has such a requirement in some of its engine oil specifications. Accordingly, this test method is written for those laboratories that use the TMC services. Laboratories that choose not to use these services should ignore those portions of the test method that refer to the TMC. Information Letters issued periodically by the TMC may modify this method.[3] In addition, the TMC may issue supplementary memoranda related to the test method.

1. Scope*

1.1 This test method covers and is required to evaluate the performance of engine oils intended to satisfy certain American Petroleum Institute (API) C service categories (included in Specification D4485). It is performed in a laboratory using a standardized high-speed, single-cylinder diesel engine.[4] Piston and ring groove deposit-forming tendency and oil consumption is measured. The piston, the rings, and the liner are also examined for distress and the rings for mobility.

1.2 The values stated in SI units are to be regarded as standard. No other units of measurement are included in this standard.

1.2.1 *Exceptions*—Where there is no direct SI equivalent such as screw threads, National Pipe Threads/diameters, tubing size, or where there is a sole source supply equipment specification.

1.3 *This standard does not purport to address all of the safety concerns, if any, associated with its use. It is the responsibility of the user of this standard to establish appropriate safety, health, and environmental practices and determine the applicability of regulatory limitations prior to use.* Being an engine test method, this standard does have definite hazards that require safe practices (see Appendix X2 on Safety).

1.4 The following is the Table of Contents:

	Section
Scope	1
Referenced Documents	2
Terminology	3
Summary of Test Method	4
Significance and Use	5
Apparatus and Installation	6
Intake Air System	6.2.1
Exhaust System	6.2.2
Fuel System	6.2.3
Oil Consumption System	6.2.4
Engine Oil System	6.2.5
Oil Heating System	6.2.5.1
Oil Sample Valve	6.2.5.2
Engine Coolant System	6.2.6
Engine Instrumentation	6.2.7
Reagents and Materials	7
Oil Samples	8
Preparation of Apparatus	9
General Engine Assembly Practices	9.1
Complete Engine Inspection	9.2
Copper Components	9.3
Engine Lubricant System Flush	9.4
Engine Piston Cooling Jets	9.5
Engine Measurements and Inspections	9.6

[1] This test method is under the jurisdiction of ASTM Committee D02 on Petroleum Products, Liquid Fuels, and Lubricants and is the direct responsibility of Subcommittee D02.B0.02 on Heavy Duty Engine Oils.

Current edition approved July 1, 2023. Published July 2023. Originally approved in 2001. Last previous edition approved in 2017 as D6681 – 17. DOI: 10.1520/D6681-23.

[2] ASTM Test Monitoring Center (TMC), 203 Armstrong Drive, Freeport, PA 16229.

[3] This edition incorporates revisions contained in all information letters through 23-1. Users of this test method shall contact the ASTM Test Monitoring Center to obtain the most recent information letters.

[4] Available from Caterpillar Inc., Engine System Technology Development, P.O. Box 610, Mossville, IL 61552-0610.

*A Summary of Changes section appears at the end of this standard

Copyright © ASTM International, 100 Barr Harbor Drive, PO Box C700, West Conshohocken, PA 19428-2959. United States

Documents
Document Sharing Hub
Full document details: ASTM D6681-23

	Section
Cylinder Head	9.7
Valve Guide Bushings	9.8
Fuel Injector	9.9
Piston and Rings	9.10
Cylinder Liner	9.11
Compression Ratio	9.12
Engine Timing	9.13
Engine Coolant System Cleaning Procedure	9.14
Calibration and Standardization	10
Test Cell Instrumentation	10.1
Instrumentation Standards	10.2
Coolant Flow	10.3
Re-calibration Requirements	10.4
Fuel Injectors	10.5
Air Flow	10.6
Intake Air Barrel	10.7
Fuel Filter	10.8
Oil Scale Flow Rates	10.9
Calibration of Test Stands	10.10
Extending Test Stand Calibration Period	10.11
Test Run Numbering	10.13
Humidity Calibration Requirements	10.14
Calibration of Piston Deposit Raters	10.15
Procedure	11
Engine Break-in Procedure	11.1
Cool-down Procedure	11.2
Warm-up Procedure	11.3
Shutdowns and Lost Time	11.4
Periodic Measurements	11.5
Engine Control Systems	11.6
Engine Coolant	11.6.1
Engine Fuel System	11.6.2
Engine Oil Temperature	11.6.3
Exhaust Pressure	11.6.4
Intake Air	11.6.5
Post-Test Procedures	11.7
Piston Ring Side Clearances	11.7.1
Piston Ratings	11.7.2
Referee Ratings	11.7.3
Ring End Gap Increase	11.7.4
Cylinder Liner Wear	11.7.5
Cylinder Liner Bore Polish	11.7.6
Photographs	11.7.7
Calculation and Interpretation of Results	12
Test Validity	12.1
Calculations	12.2
Quality Index	12.2.1
Oil Consumption	12.2.2
Report	13
Forms and Data Dictionary	13.1
Test Validity	13.2
Report Specifics	13.3
Precision and Bias	14
Precision	14.1
Bias	14.1.4
Keywords	15
Annexes	
Engine and Parts Warranty	Annex A1
Instrument Locations, Measurements, and Calculations	Annex A2
Cooling System Arrangement	Annex A3
Intake Air Mass Flow Sensor Installation	Annex A4
Fuel System Design and Required Components	Annex A5
Oil System	Annex A6
Exhaust and Intake Barrel Piping	Annex A7
Humidity Probe Installation (Location)	Annex A8
Return Goods Authorization (Claim Form)	Annex A9
Engine Assembly Information	Annex A10
Flushing Instructions and Apparatus	Annex A11
Warm-up, Cool-down and Testing Conditions	Annex A12
Piston and Liner Rating Modifications	Annex A13
Additional Report Forms	Annex A14
Test Report Forms	Annex A15
Appendixes	
Various Examples for Reference Purposes	Appendix X1
Safety	Appendix X2

1.5 *This international standard was developed in accordance with internationally recognized principles on standardization established in the Decision on Principles for the Development of International Standards, Guides and Recommendations issued by the World Trade Organization Technical Barriers to Trade (TBT) Committee.*

2. Referenced Documents

2.1 *ASTM Standards:*[5]

D86 Test Method for Distillation of Petroleum Products and Liquid Fuels at Atmospheric Pressure

D93 Test Methods for Flash Point by Pensky-Martens Closed Cup Tester

D97 Test Method for Pour Point of Petroleum Products

D130 Test Method for Corrosiveness to Copper from Petroleum Products by Copper Strip Test

D235 Specification for Mineral Spirits (Petroleum Spirits) (Hydrocarbon Dry Cleaning Solvent)

D445 Test Method for Kinematic Viscosity of Transparent and Opaque Liquids (and Calculation of Dynamic Viscosity)

D482 Test Method for Ash from Petroleum Products

D524 Test Method for Ramsbottom Carbon Residue of Petroleum Products

D613 Test Method for Cetane Number of Diesel Fuel Oil

D664 Test Method for Acid Number of Petroleum Products by Potentiometric Titration

D1319 Test Method for Hydrocarbon Types in Liquid Petroleum Products by Fluorescent Indicator Adsorption

D2274 Test Method for Oxidation Stability of Distillate Fuel Oil (Accelerated Method)

D2425 Test Method for Hydrocarbon Types in Middle Distillates by Mass Spectrometry

D2500 Test Method for Cloud Point of Petroleum Products and Liquid Fuels

D2622 Test Method for Sulfur in Petroleum Products by Wavelength Dispersive X-ray Fluorescence Spectrometry

D2709 Test Method for Water and Sediment in Middle Distillate Fuels by Centrifuge

D3227 Test Method for (Thiol Mercaptan) Sulfur in Gasoline, Kerosine, Aviation Turbine, and Distillate Fuels (Potentiometric Method)

D3524 Test Method for Diesel Fuel Diluent in Used Diesel Engine Oils by Gas Chromatography

D4175 Terminology Relating to Petroleum Products, Liquid Fuels, and Lubricants

D4052 Test Method for Density, Relative Density, and API Gravity of Liquids by Digital Density Meter

D4485 Specification for Performance of Active API Service Category Engine Oils

D4739 Test Method for Base Number Determination by Potentiometric Hydrochloric Acid Titration

[5] For referenced ASTM standards, visit the ASTM website, www.astm.org, or contact ASTM Customer Service at service@astm.org. For *Annual Book of ASTM Standards* volume information, refer to the standard's Document Summary page on the ASTM website.

Documents
Document Sharing Hub

Full document details: ASTM D6681-23

D5185 Test Method for Multielement Determination of Used and Unused Lubricating Oils and Base Oils by Inductively Coupled Plasma Atomic Emission Spectrometry (ICP-AES)

D5862 Test Method for Evaluation of Engine Oils in Two-Stroke Cycle Turbo-Supercharged 6V92TA Diesel Engine (Withdrawn 2009)[6]

D6202 Test Method for Automotive Engine Oils on the Fuel Economy of Passenger Cars and Light-Duty Trucks in the Sequence VIA Spark Ignition Engine (Withdrawn 2009)[6]

D6593 Test Method for Evaluation of Automotive Engine Oils for Inhibition of Deposit Formation in a Spark-Ignition Internal Combustion Engine Fueled with Gasoline and Operated Under Low-Temperature, Light-Duty Conditions

D7422 Test Method for Evaluation of Diesel Engine Oils in T-12 Exhaust Gas Recirculation Diesel Engine

E29 Practice for Using Significant Digits in Test Data to Determine Conformance with Specifications

G40 Terminology Relating to Wear and Erosion

2.2 *SAE Standard:*

SAE J183 Engine Oil Performance and Engine Service Classification[7]

2.3 *API Standard:*

API 1509 Engine Service Classification and Guide to Crankcase Oil Selection[8]

2.4 *Other ASTM Document:*

ASTM Deposit Rating Manual 20 (formerly CRC Manual 20)[9]

3. Terminology

3.1 *Definitions:*

3.1.1 *additive, n*—a material added to another, usually in a small amount, to impart or enhance desirable properties or to suppress undesirable properties. **D4175**

3.1.2 *automotive, adj*—descriptive of equipment associated with self-propelled machinery, usually vehicles driven by internal combustion engines. **D4485**

3.1.3 *blind reference oil, n*—a reference oil, the identity of which is unknown by the test facility. **D4175**

3.1.3.1 *Discussion*—This is a coded reference oil which is submitted by a source independent from the test facility.

3.1.4 *blowby, n—in internal combustion engines*, that portion of the the combustion products and unburned air/fuel mixture that leaks past piston rings into the engine crankcase during operation. **D4175**

3.1.5 *calibrate, v*—to determine the indication or output of a device (e.g., thermometer, manometer, engine) with respect to that of a standard.

3.1.6 *calibrated test stand, n*—a test stand on which the testing of reference material(s), conducted as specified in the standard, provided acceptable test results. **Sub. B Glossary**[2]

3.1.6.1 *Discussion*—In several automotive lubricant standard test methods, the ASTM Test Monitoring Center provides testing guidance and determines acceptability.

3.1.7 *candidate oil, n*—an oil which is intended to have the performance characteristics necessary to satisfy a specification and is to be tested against that specification. **D4175**

3.1.7.1 *Discussion*—These oils are mainly submitted for testing as *candidates* to satisfy a specified performance; hence the designation of the term.

3.1.8 *debris, n—in internal combustion engines*, solid contaminant materials unintentionally introduced into the engine or resulting from wear. **D5862**

3.1.9 *dispersant, n—in engine oil*, an additive that reduces deposits on oil-wetted engine surfaces primarily through suspension of particles. **D4175**

3.1.10 *engine oil, n*—a liquid that reduces friction or wear, or both, between the moving parts within an engine; removes heat, particularly from the underside of pistons; and serves as a combustion gas sealant for the piston rings. **D5862**

3.1.10.1 *Discussion*—It may contain additives to enhance certain properties. Inhibition of engine rusting, deposit formation, valve train wear, oil oxidation and, foaming are examples.

3.1.11 *heavy-duty, adj—in internal combustion engine operation*, characterized by average speeds, power output, and internal temperatures that are generally close to the potential maximums. **D4485**

3.1.12 *lubricant, n*—any material interposed between two surfaces that reduces the friction or wear, or both, between them. **D5862**

3.1.13 *lubricating oil, n*—a liquid lubricant, usually comprising several ingredients, including a major portion of base oil and minor portions of various additives. **D4175**[2]

3.1.14 *oxidation, n—of engine oil*, the reaction of the oil with an electron acceptor, generally oxygen, that can produce deleterious acidic or resinous materials often manifested as sludge formation, varnish formation, viscosity increase, or corrosion, or a combination thereof. **D4175**

3.1.15 *non-reference oil, n*—any oil other than a reference oil; such as a research formulation, commercial oil, or candidate oil. **D4175**

3.1.16 *purchaser, n—of an ASTM test*, person or organization that pays for the conduct of an ASTM test method on a specified product. **D6202**

3.1.17 *reference oil, n*—an oil of known performance characteristics, used as a basis for comparison.

3.1.17.1 *Discussion*—Reference oils are used to calibrate testing facilities, to compare the performance of other oils, or to evaluate other material (such as seals) that interact with oils. **D4175**

3.1.18 *scoring, n—in tribology*, a severe form of wear characterized by the formation of extensive grooves and scratches in the direction of sliding. **G40**

[6] The last approved version of this historical standard is referenced on www.astm.org.

[7] Available from SAE International (SAE), 400 Commonwealth Dr., Warrendale, PA 15096, http://www.sae.org.

[8] Available from American Petroleum Institute (API), 1220 L. St., NW, Washington, DC 20005-4070, http://www.api.org.

[9] For Stock #TMCMNL20, visit the ASTM website, www.astm.org, or contact ASTM International Customer Service at service@astm.org.

AVA Documents
Document Sharing Hub

Full document details: ASTM D6681-23

3.1.19 *scuffing, n—in lubrication*, damage caused by instantaneous localized welding between surfaces in relative motion which does not result in immobilization of the parts. **D6593**

3.1.20 *sponsor, n—of an ASTM test method*, an organization that is responsible for ensuring supply of the apparatus used in the test procedure portion of the test method. **D4175**

3.1.20.1 *Discussion*—In some instances, such as a test method for chemical analysis, an ASTM working group can be the sponsor of the test method. In other instances, a company with a self-interest may or may not be the developer of the test procedure used within the method, but is the sponsor of the test method.

3.1.21 *used oil, n*—any oil that has been in a piece of equipment (for example, an engine, gearbox, transformer, or turbine), whether operated or not. **D4175**

3.1.22 *varnish, n—in internal combustion engines*, a hard, dry, generally lustrous deposit that can be removed by solvents but not by wiping with a cloth. **D4175**

3.1.23 *wear, n*—the loss of material from a surface, generally occurring between two surfaces in relative motion, and resulting from mechanical or chemical action or a combination of both. **D7422**

4. Summary of Test Method

4.1 Prior to each test, the power section of the engine is disassembled, solvent-cleaned, measured, and rebuilt in strict accordance with the specifications. A new piston, ring assembly, and cylinder liner are measured and installed for each test. The engine crankcase is solvent-cleaned and worn or defective parts are replaced. The test stand is equipped with feedback control systems for fuel rate, engine speed, and other engine operating conditions. A suitable system for filtering, compressing, humidifying, and heating the inlet air is required along with a system for controlling the engine exhaust pressure. Test operations involve the control of the single-cylinder diesel test engine for a total of 360 h at specified speeds and fuel rate input using the test oil as a lubricant. A defined break-in precedes each test and is also used when restarting an engine. At the end of the test, the piston deposits are rated, the piston, rings and liners are photographed, inspected and measured, oil consumption is calculated and the oil is analyzed to determine the test results. Critical engine conditions are statistically analyzed to determine if the test was precisely operated. Test acceptability parameters for each calibration test are also statistically analyzed to determine if the engine/test stand produce the specified results.

5. Significance and Use

5.1 This is an accelerated engine oil test, performed in a standardized, calibrated, stationary single-cylinder diesel engine that gives a measure of (*1*) piston and ring groove deposit forming tendency, (*2*) piston, ring and liner scuffing and (*3*) oil consumption. The test is used in the establishment of diesel engine oil specification requirements as cited in Specification D4485 for appropriate API Performance Category C oils (API 1509). The test method can also be used in diesel engine oil development.

6. Apparatus and Installation

6.1 The test engine is an electronically controlled, direct injection, in-head camshaft, single-cylinder diesel engine with a four-valve arrangement. The engine has a 137.2 mm bore and a 165.1 mm stroke resulting in a displacement of 2.4 L.

6.1.1 The electronic control module (ECM) defines the desired engine fuel timing, monitors and limits maximum engine speed, maximum engine power, minimum oil pressure, and, optionally, maximum engine crankcase pressure. The ECM also controls the fuel injection duration that defines the engine fuel rate based on set conditions from the test cell feedback control systems. The oil pressure is also set by the ECM with signals to the 1Y3867 engine air pressure controller (Mamac) to modulate the facility air supply to the 1Y3898 Johnson Controls relief valve.

6.1.2 The 1Y3700 engine arrangement also consists of inlet air piping and hoses from the cylinder head to the air barrel and exhaust piping and bellows from the cylinder head to the exhaust barrel that are specifically designed for oil testing. See the Caterpillar Service Manual.[4]

6.2 Equip the engine test stand with the following accessories or equipment:

6.2.1 *Intake Air System*—The intake air system components from the cylinder head to the air barrel are a part of the basic 1Y3700 engine arrangement. These components consisting of an adapter, elbow, hose, clamps, and flanged tube can be found in the 1Y3700 Parts Book.[4]

6.2.1.1 Purchase the 1Y3978 intake air barrel (which is almost identical to the exhaust barrel except for the top cover) that has been specifically designed from one of the three approved manufacturers.[10,11] Install the intake air barrel at the location shown in Annex A7. Do not add insulation to the barrel.

6.2.1.2 Paint the inside of the intake air piping with Caterpillar yellow primer or red Glyptal prior to installation.[12,11]

6.2.1.3 Install the air heater elements in the intake air barrel as specified in Annex A7 (even if they will not be supplied with electricity).[13,11]

6.2.1.4 Use an air filter capable of filtering particles 10 µ (or smaller).

6.2.1.5 Use a Sierra Model 780 airflow meter with Feature 1 = F6, Feature 2 = CG and calibration temperature = 60 °C to measure intake airflow for each calibration test.[14,11] Annex A4

[10] The sole sources of supply of the intake air barrel known to the committee at this time are Cimino Machinery Corp., 5958 South Central Ave., Chicago, IL 60638; Gaspar Inc., 4106 Mahoning Rd. N.E., Canton, OH 44705; and M.L. Wyrick Welding, 2301 Zanderson Highway 16 N, Jourdanton, TX 78026.

[11] If you are aware of alternative suppliers, please provide this information to ASTM International Headquarters. Your comments will receive careful consideration at a meeting of the responsible technical committee [1], which you may attend.

[12] The sole source of supply of the crankcase paint primer known to the committee at this time is BASF Coating and Colorant Div., P.O. Box 1297, Morganton, NC 28655. (Primer No.A123590 and BASF Part No.U27YD005, Yellow CAT Primer Part No.IE2083A.)

[13] The sole source of supply of the air heater elements known to the committee at this time is Watlow Air Heaters, Chicago, IL 708-490-3900.

[14] The sole source of supply of the airflow meter known to the committee at this time is Sierra Instruments, Inc., 5 Harris Ct., Monterey, CA 93940.

AVA Documents
Document Sharing Hub

Full document details: ASTM D6681-23

shows the piping requirements for the installation of the Sierra Model 780 airflow meter.

6.2.1.6 Measure the inlet air temperature at the location shown in Annex A2. Measure the inlet air pressure at the air barrel as shown in Annex A7. The location of the 1Y3977 humidity probe is shown in Annex A8. The sample line might require insulation to prevent dropping below dew point temperature and shall not be hygroscopic. Drain taps may be installed at the low points of the combustion air system.

6.2.1.7 Use feedback-equipped controls to maintain filtered, compressed, and humidified inlet air at the conditions specified in Annex A12.

6.2.2 *Exhaust System*—The exhaust system components from the cylinder head to the exhaust barrel are part of the basic 1Y3700 engine arrangement. These components consisting of an adapter, elbow, bellows, flange, and clamps can be found in the 1Y3700 Parts Book.

6.2.2.1 Purchase the 1Y3976 exhaust barrel (which is almost identical to the intake barrel except for the top cover) that has been specifically designed from one of the three approved manufacturers. Install the exhaust barrel at the location shown in Annex A7. Do not add insulation to the barrel.

6.2.2.2 Install a restriction valve downstream from the exhaust barrel. The distance between the valve and barrel is not specified. The location of the exhaust thermocouple is shown in Annex A2. Measure the exhaust pressure at the exhaust barrel shown in Annex A7.

6.2.2.3 Use feedback-equipped controls to maintain the exhaust gases at the pressure specified in Annex A12.

6.2.3 *Fuel System*—The fuel system schematic is shown in Annex A5. Desired fuel injection timing is controlled by the engine computer at 13° BTC. Measure the fuel rate using micro motion device with a maximum range of 90 kg/h scaled to the 1P operation range specified in Annex A12.[15,11] Use the day tank specified in Annex A5. Measure fuel temperature at the fuel filter base as shown in Annex A2 and control it using the cell facility feedback system. Use the required fuel heat exchanger(s) and arrange them as specified in Annex A5. Use the Fisher regulator specified in Annex A5.

6.2.4 *Oil Consumption System*—Use an oil scale system to accurately measure oil consumption (see Fig. A6.2 and Fig. A6.3). The oil scale system shall have a resolution as listed in Annex A2. Use flexible hoses similar to Aeroquip flexible hose, FC352-08, to-and-from the oil scale reservoir to eliminate measurement errors.[16,11] Use No.5 TFE-fluorocarbon, steel-braided hoses to and from the oil scale pumps. The hose length to-and-from the oil scale cart shall not exceed 2.7 m. Use the special oil pan adapter described in Fig. A6.4.

6.2.5 *Engine Oil System*—A schematic of the oil system is shown in Fig. A6.1. Measure oil pressure at the engine oil manifold (see Annex A2). An engine oil pressure sensor transmits a signal to the ECM that maintains oil pressure at 415 kPa. The ECM transmits a signal to an engine-mounted Mamac air pressure controller. The Mamac modulates the facility air pressure of 280 kPa to levels that vary between 0 kPa to 140 kPa and directs it to the normally closed Johnson Controls relief valve. Because the engine oil pressure sensor calibration might vary from the cell data acquisition transducer, vary the oil pressure adjust signal to the ECM to maintain the oil pressure at the test specifications. See the Electronic Installation and Operation manual for additional information. The ECM maintains the oil pressure regardless of engine speed. Measure the oil temperatures at locations shown in Annex A2.

6.2.5.1 *Oil Heating System*—Use an external oil heating system provided by the test facility to maintain the engine oil manifold temperature specified in Annex A12. An example system is shown in Appendix X1. A special 1Y3908 oil cooler bonnet has been designed to allow separate fluids to the engine coolant tower arrangement (see Fig. A6.9). Plug the 1Y3660 oil cooler adapter and 1Y3908 heat exchanger bonnet as shown in Annex A6. Use Paratherm NF for the heating fluid.[17,11] The temperature of the Paratherm NF is measured by the thermocouple shown in Annex A2.

6.2.5.2 *Oil Sample Valve*—Refer to Annex A2 for the installation location and component makeup of the oil sample valve. Use of alternate equivalent components for the sample valve is permitted.

6.2.6 *Engine Coolant System*—The coolant system schematic is shown in Annex A3. Control the coolant temperature out of the engine using a cell facility feedback system. Use a 1Y3898 Johnson Controls valve or equivalent fail-open valve to regulate the coolant temperature out of the engine as shown by the schematic in Annex A3. If the 1Y3898 Johnson valve is used, supply facility air pressure at 280 kPa to the controller that regulates air pressure to the valve at 0 kPa to 140 kPa. Install a feedback-equipped control system to pneumatically adjust the valve. Remove the 1Y3832 hose originally supplied with the engine and install a sight glass using the components shown in Annex A3.

6.2.7 *Engine Instrumentation*—Use feedback-equipped systems to control the engine operating temperatures, pressures, and flow rates. Measure the engine operating conditions at the locations shown in Annex A2. For temperature measurements, use thermocouples 1Y468 (intake air), 1Y467 (engine exhaust) and 1Y466 (fluids-water, oil, and fuel) or equivalent thermocouples as specified in Annex A2. Instrument measurement and reporting resolutions are shown in Annex A2.

6.2.8 A dynamometer with feedback control to maintain engine torque and speed. Use a starting system capable of at least breakaway torque of 136 N·m and sustained torque of 102 N·m at 200 r/min.

6.2.9 Compressed air at 35 kPa to the top of the coolant tower as specified in Annex A3 to ensure water does not boil out of the antifreeze mixture and result in less heat rejection from the engine.

6.2.10 Measure engine blowby downstream of the engine breather housing by measuring the delta pressure across an orifice or an equivalent device.

[15] The sole source of supply of the apparatus known to the committee at this time is Micro Motion, Inc. 7070 Winchester Circle, Boulder, CO 80301.

[16] The sole source of supply of the flexible hose known to the committee at this time is Aeroquip Industrial Div, 1225 W. Main Street, Van Wert, OH 45891.

[17] The sole source of supply of the fluid known to the committee at this time is Paratherm NF Oil, Conshohocken, PA 19428.

AVA Documents
Document Sharing Hub

Full document details: ASTM D6681-23

6.2.11 The crankcase pressure is above atmospheric pressure with this engine arrangement. Measure it at the location shown in Annex A2.

6.3 Obtain information concerning the test engine, engine electronics system, new engine parts, replacement parts, and permissible substitution or replacement parts from Caterpillar, Inc.

6.4 Engine and parts warranty information can be found in Annex A1. Use the form listed in Annex A9 for returning defective parts.

7. Reagents and Materials

7.1 *Purity of Reagents*—Reagent grade chemicals shall be used in all tests. Unless otherwise indicated, it is intended that all reagents conform to the specifications of the Committee on Analytical Reagents of the American Chemical Society where such specifications are available.[18] Other grades may be used, provided it is first ascertained that the reagent is of sufficiently high purity to permit its use without lessening the accuracy of the determination.

7.2 *Diesel Piston Rating Booth,* as described by ASTM Deposit Rating Manual 20.

7.3 *Diesel Piston Rating Lamp,* as described by ASTM Deposit Rating Manual 20

7.4 *Dispersant Engine Cleaner.*[19,11]

7.5 *Engine Coolant*—Use a 50/50 mixture of mineral-free water and Caterpillar brand coolant (P/N 8C684 for 3.8 L or 8C3686 for 208 L drum) for engine coolant. Mineral-free water is defined as water having a mineral content no higher than 34.2 mg/kg total dissolved solids. The coolant mixture may be reused for up to 1600 h. Keep the mixture at a 50:50 ratio as determined by using either Caterpillar testers 5P3514 or 5PO957 or an equivalent tester. Keep the coolant mixture contamination free. Total solids shall remain below 5000 mg/kg. Keep the additive level correct using Caterpillar test kit P/N 8T5296.

7.6 *Lead Shot,* commercial grade, approximately 5 mm in diameter.

7.7 *Light Grease.*

7.8 *Mobil EF-411,* available from ExxonMobil for engine assembly and calibration of the oil scale pump flow rates.[20,11]

7.9 *Paratherm NF,* as supplied by Paratherm and used as the fluid to heat the engine oil.[17,11]

7.10 *Pentane (Solvent),* purity > 99 %, high-performance, liquid chromatography grade.

7.11 *Reference Oil,* as supplied by the TMC for calibration of the test stand.

7.12 *REO 217,* as supplied by the CRC and used when any copper components are changed.

7.13 *Sodium Bisulfate ($NaHSO_4$),* commercial grade.

7.14 *Solvent*—Use only mineral spirits meeting the requirements of Specification D235, Type II, Class C for Aromatic Content (0 % to 2 %) by vol, Flash Point (61 °C, min) and Color (not darker than + 25 on Saybolt Scale or 25 on Pt-Co Scale). (**Warning—**Combustible. Health hazard.) Obtain a Certificate of Analysis for each batch of solvent from the supplier.

7.15 *Fuel*—Obtain the required test fuel from Chevron Phillips[21,11] as PC-9-HS Reference Diesel Fuel (see Annex A14).

7.16 *Test Oil*—The total amount of oil needed for each lubricant test is approximately 42 L.

7.17 *Trisodium Phosphate (Na_3PO_4),* commercial grade.

7.18 *5.4000 in. Ring Bore Standard Class Z Master.*[22,11]

8. Oil Samples

8.1 Take purge samples of 250 mL at 48 h, 72 h, 120 h, 144 h, 168 h, 192 h, 216 h, 264 h, 312 h, and 336 h. Following removal of each purge sample, remove a 30 mL sample, then add 317 g ± 10 g of new oil. It is not necessary to perform analysis on these samples of 30 mL. Use the purge sample to return to the full mark.

8.1.1 Take purge samples of 250 mL at 0 h (new) and 24 h, 96 h, 240 h, 288 h, and 360 h. Following removal of each purge sample, remove a 90 mL sample and add 370 g ± 10 g of new oil.

8.1.2 Analyze all 90 mL samples for viscosity by Test Method D445 at 100 °C and 40 °C, TBN by Test Method D4739, TAN by Test Method D664, and the wear metals Al, Cr, Cu, Fe, Pb, Si by Test Method D5185. Analyze the samples for fuel dilution taken at 24 h, 240 h, and 360 h by Test Method D3524. See Fig. A6.7 and Fig. A6.8 for two graphical examples and a sample worksheet.

9. Preparation of Apparatus

9.1 *General Engine Assembly Practices*—As a part of good laboratory practice, inspect all components and assemblies that are exposed when the engine is disassembled and record the information for future reference. Inspect valve train components, bearings, journals, housings, seals and gaskets, and so forth and replace as needed. Assemble the engine with components and bolt torques as specified in the 1Y3700 engine Service Manual (see Annex A10 for a partial list). It is the intent of this procedure for all engine assemblies and adjustments to be targeted to the mean of the specified values. Clean

[18] *ACS Reagent Chemicals, Specifications and Procedures for Reagents and Standard-Grade Reference Materials*, American Chemical Society, Washington, DC. For suggestions on the testing of reagents not listed by the American Chemical Society, see *Analar Standards for Laboratory Chemicals*, BDH Ltd., Poole, Dorset, U.K., and the *United States Pharmacopeia and National Formulary*, U.S. Pharmacopeial Convention, Inc. (USPC), Rockville, MD.

[19] The sole source of supply of the engine cleaner known to the committee at this time is The Lubrizol Corp., 29400 Lakeland Blvd., Cleveland, OH 44092

[20] The sole source of supply of the oil known to the committee at this time is Mobil EF-411, from Golden West Oil Co., 3010 Aniol St., San Antonio, TX 78219.

[21] The sole source for 1P fuel known to the committee at this time is Chevron Phillips Chemical Co., Chevron Tower, 1301 McKinney Street, Houston, TX 77010-3030.

[22] The sole source of supply of the apparatus known to the committee at this time is Morse-Hemco, 457 Douglas Ave., Holland, MI 49423.

AVA Documents
Document Sharing Hub

Full document details: ASTM D6681-23

and lubricate the components in keeping with good assembly practices. Keep airborne dirt and debris to a minimum in the assembly area. Maintain standard engine assembly techniques and practices (such as staggering piston ring gap positions, and so forth).

9.2 *Complete Engine Inspection*—Perform a complete engine inspection at intervals of 13 000 h. Ensure that wearing surfaces such as main bearings and journals, rod bearings and journals, camshaft bearings, valve train components, fuel system components, and so forth all are within manufacturer's specifications. Refer to the 1Y3700 Service Manual for disassembly, assembly, inspections, and specifications. Paint crankcases as necessary with either Caterpillar yellow primer or red Glyptal.[12,11]

9.3 *Copper Components*—Anytime a copper part is replaced, run an engine test using REO 217 until two consecutive periods of 12 h show a stable copper level. To eliminate the need to perform this pacification process when replacing the engine oil cooler, use of a nickel-plated oil cooler is permitted.

9.4 *Engine Lubricant System Flush*—Flush the engine of used oil before every test. Annex A11 shows the engine flush procedure and apparatus. A flushing instruction sheet shown in Annex A11 gives the step-by-step process required for flushing. The 1Y3700 engine arrangement includes five flushing nozzles in the crankcase and front cover (see Annex A11). These nozzles are piped in parallel with the 1Y3935 filter flushing adapter (or equivalent) from a laboratory-provided manifold that pressurizes fluids supplied by a flush cart (see Appendix X1). Seal the gear train housing during flush with a 1Y3917 round plug with a 117-8801 o-ring as shown in Annex A11. Seal the crankcase using a 1Y3979 block flush cover with an internal bleed passage for the cam oil supply. Bolt a 1Y3980 plastic jet aiming fixture to the flush cover that is also used for flushing (see Annex A11). If the test oil is not available at engine assembly, Mobil EF411 oil may be substituted.

9.5 *Engine Piston Cooling Jets*—The piston cooling jets are flow-checked at the supplier and serialized to ensure proper performance, but the minimal rod clearances might result in jet movement during assembly. Verify proper jet flow positioning using EF-411 before each test with the 1Y3980 plastic jet aiming fixture and oil pressure to the manifold of 415 kPa. Record the cooling jet serial number.

9.6 *Engine Measurements and Inspections*—Measure and inspect the engine components prior to each test (see Table A10.2 for partial specification list). Refer to the 1Y3700 Service Manual for information concerning component reusability and assembly not found in this procedure. The part numbers of components that need replacing are found in the 1Y3700 Parts Manual. Record the crankshaft angles at the specified maximum injector lift, exhaust, and intake maximum lift before each test using the reference listed in Fig. A10.7. Record component part numbers and serial numbers and other required measurements as shown in the test report. Inspect and reuse the rocker arm roller followers and camshaft lobe surfaces based on Caterpillar Service Publication SEBF8256.[4]

9.7 *Cylinder Head*—A reconditioned head is required for each test. Measurements after reconditioning shall be within specifications as shown in the 1Y3700 Service Manual. Do not swap the cylinder head/jug assembly from test stand-to-test stand. Use the head/jug assembly used to calibrate the stand for all non-reference oil testing in that stand. Fig. A10.1 shows the cylinder head nut torque sequence.

9.8 *Valve Guide Bushings*—Clean the valve guide bushings with a solvent and bristle brush prior to assembly. Lubricate the bushings and valve stems with Mobil EF-411 prior to assembly. See the 1Y3700 Service Manual for guide reusability specifications. Install new valve guide seals for each test.

9.9 *Fuel Injector*—Remove the fuel injector from the cylinder head before reconditioning commences. Refer to the 1Y3700 Service Manual for removal and assembly. Return defective fuel injectors to Caterpillar for warranty and failure-mode testing using the form listed in Annex A9.

9.10 *Piston and Rings*—Use a new piston (1Y3400 iron crown, 1Y3659 aluminum skirt) and new rings (1Y3802, 1Y3803, 1Y3804) for each test.

9.10.1 Clean all three rings with pentane and a lint-free 100 % cotton towel.

9.10.2 Measure the ring side clearances and ring end gaps for all three rings (see Fig. A10.2 and Table A10.1). Keystone ring side clearance measurements require the ring to be confined in a dedicated slotted liner (see Appendix X1) or a ring gage[15,11] 137.16 mm in diameter. Measure the side clearances using four feeler gages of equal width and thickness of 0.01 mm at intervals of 90° around the piston. Measure the rectangular ring side clearance this way as well. Measure the minimum side clearance as specified in ASTM Deposit Rating Manual 20.

9.10.3 Record the measurements for these parts before and after each test. Compare the measurements before the test and after the test to determine the amount of wear.

9.10.4 Assemble the piston with the part number toward the camshaft.

9.11 *Cylinder Liner*—Use a new 1Y3805 or 1Y3997 cylinder liner for each test.

9.11.1 After removing the protective oil/grease with mineral spirits (see 7.14), clean the liner bore with a hot tap water and heavy-duty clothes washing detergent solution, then rinse with hot tap water.

9.11.2 Measure and record the liner surface finish. The surface finish specification shown in Fig. A10.3 does not apply to the 1Y3997 cylinder liner.

9.11.3 Oil the liner bore with only Mobil EF-411. Assemble the cylinder liner, block and head with the torque specification shown in the 1Y3700 Service Manual or Fig. A10.1.

9.11.4 Measure the liner with a dial bore gage to ensure that the out-of-round and taper conditions are within specified tolerances measured at seven intervals as shown in Fig. A10.3. Measure the cylinder liner projection using the modified indicator shown in Fig. A10.4.

9.11.5 Torque the cylinder liner support ring using the procedure shown in Fig. A10.5.

9.12 *Compression Ratio*—Before starting each test, measure the piston-to-head clearance to ensure the proper compression ratio is used. Determine this dimension by using feel gages,

AVA Documents
Document Sharing Hub

Full document details: ASTM D6681-23

each with a diameter of approximately 3.5 mm. Locate four lead balls on the top of the piston at 90° intervals on the major and minor piston diameters. Hold them in place with light grease. With the piston near the top of the stroke, install the head and block assembly and torque to specifications. Turn the engine over top center by hand to compress the lead balls then remove the head and block assembly and measure the thickness of the lead balls to obtain the average piston-to-head clearance. The piston-to-head clearance specification is 1.62 mm ± 0.07 mm. Use multiple 1Y3817 block gaskets to adjust the clearance. If the piston-to-head measurement exceeds the tolerance specification, check the crankshaft main and rod journals, connecting rod and main bearings, and piston pin and rod bushing for excessive wear. The specified compression ratio for the 1Y3700 engine is 16.2 to 1.

9.13 *Engine Timing*—The engine ECM sets desired fuel injection timing to 13° BTC. Record this timing using the engine technician service tool. Mechanically time the actual engine components as shown in Annex A10. Install the electronic sensors as shown in the Electronic Installation and Operation manual. Correctly assemble both the mechanical and electrical systems to produce the desired fuel timing.

9.14 *Engine Coolant System Cleaning Procedure*—Clean the coolant system when visual inspections show the presence of any oil, grease, mineral deposits, or rust following the procedure listed in Annex A3.

9.15 After the engine components have been prepared and assembled, perform the following:

9.15.1 Fill the crankcase with 5800 g ± 50 g of test oil.

9.15.2 Install a new 1R0713 oil filter.

9.15.3 Fill the coolant system with coolant specified in Section 7.

9.15.4 Ensure the facility coolant to the engine heat exchanger is operational.

9.15.5 Pressurize the fuel system to remove air, then return the system to a non-pressurized state before starting engine.

9.15.6 Ensure all other systems and facilities are operational before starting the engine break-in.

10. Calibration and Standardization

10.1 *Test Cell Instrumentation*—Calibrate all facility readout instrumentation used for the test immediately prior to subsequent stand calibration. Instrumentation calibration prior to subsequent stand calibration tests (that is, those that follow a failed or invalid first attempt) are at the discretion of the test laboratory. Refer to Annex A2 for calibration tolerances and allowable *system* time constants.

10.2 *Instrumentation Standards*—Calibrate all temperature, pressure, flow, and speed measurement *standards* on a yearly basis. The calibration of all standards shall be traceable to a national bureau of standards. Maintain all calibration records for a minimum of two years.

10.3 *Coolant Flow*—Calibrate the coolant flow rate as follows: (*1*) calibrate the differential pressure transducer as outlined in 10.1 and 10.2 and, (*2*) replace the Barco venturi every two years.[23,11] Use the following relationships as conversion factors from the differential pressure across the Barco venturi to liters per minute: 3.0 in. H_2O = 24.3 L/min, 7.1 in. H_2O = 37.8 L/min and 28 in. H_2O = 75.7 L/min or use Eq 1 where ΔP is measured in in. H_2O.

$$L/min = \sqrt{\Delta P}\ 14.44 - 0.69 \quad (1)$$

10.4 *Re-calibration Requirements*—Re-calibration due to parts replacement is not required unless the engine crankcase or crankshaft, or both, require replacing or regrinding, or the crankshaft is removed for any other purpose besides bearing replacement, or the head/jug suffer a failure for any reason during the calibration period.

10.5 *Fuel Injectors*—The fuel injectors are calibrated during the manufacturing process. These fuel injectors can not be re-calibrated in the usual manner and require special test equipment to ensure proper flow, timing response, and spray patterns. Therefore, replace the fuel injector at the start of every calibration test (unless that test is the second of two required tests for a new stand or is a rerun of a previous calibration attempt). If the fuel injector is replaced on a calibrated stand, re-calibration is not required.

10.6 *Air Flow*—Install the Sierra Model 780 airflow meter to measure intake airflow. This meter should be calibrated yearly at a temperature of 60 °C. Measure the intake airflow during the break-in of every calibration test. Record the last value recorded during step five of the break-in as shown in Annex A12.

10.7 *Intake Air Barrel*—Prior to each stand calibration test, inspect the intake air barrel for rust or debris. This may be done through either of the pipe flanges using a borescope or some other optical means.

10.8 *Fuel Filter*—Change the fuel filter before every calibration test.

10.9 *Oil Scale Flow Rates*—Verify the oil scale flow rates before the start of every calibration test using the procedure listed in Annex A6.

10.10 *Calibration of Test Stands*—Use a blind calibration oil from the TMC to calibrate the engine stand. A stand calibration test is required every nine months. The calibration period begins on the start date of the acceptable calibration test. A test stand is considered calibrated when the test results are within the acceptability limits as published by TMC and the test is operationally valid. The TMC may request stand checks on calibration tests that fail to meet acceptability limits. If the calibration test is operationally valid, send the piston to another calibrated laboratory for a referee rating. The TMC issues a control chart analysis for each calibration test to the testing laboratory (see Fig. A14.2). The test stand is not considered calibrated if the calibration test was invalid or uninterpretable. Start any non-reference test prior to the expiration of the calibration period.

[23] The sole source of supply of the apparatus known to the committee at this time is Hyspan Precision Products, Inc., 1685 Brandywine Avenue, Chula Vista, CA 91911.

AVA Documents
Document Sharing Hub

Full document details: ASTM D6681-23

10.11 *Guidelines for Adjustments to Calibration Periods*—Reference oil test frequency may be adjusted for the following reasons:

10.11.1 *Procedural Deviations*—On occasions when a laboratory becomes aware of a significant deviation from the test method, such as might arise during an in-house review or a TMC inspection, the laboratory and the TMC shall agree on an appropriate course of action to remedy the deviation. This action might include the shortening of existing reference oil calibration periods.

10.11.2 *Parts and Fuel Shortages*—Under special circumstances, such as industry-wide parts or fuel shortages, the surveillance panel might direct the TMC to extend the time intervals between reference oil tests. These extensions shall not exceed one regular calibration period.

10.11.3 *Reference Oil Test Data Flow*—To ensure continuous severity and precision monitoring, calibration tests are conducted periodically throughout the year. There might be occasions when laboratories conduct a large portion of calibration tests in a short period of time. This could result in an unacceptably large time frame when very few calibration tests are conducted. The TMC can shorten or extend calibration periods as needed to provide a consistent flow of reference oil test data. Adjustments to calibration periods are made such that laboratories incur no net loss (or gain) in calibration status.

10.11.4 *Special Use of the Reference Oil Calibration System*—The surveillance panel has the option to use the reference oil system to evaluate changes that have potential impact on test severity and precision. This option is only taken when a program of donated tests is not feasible. The surveillance panel and the TMC shall develop a detailed plan for the test program. This plan requires all reference oil tests in the program to be completed as close to the same time as possible, so that no laboratory/stand calibration is left in an excessively long pending status. In order to maintain the integrity of the reference oil monitoring system, each reference oil test is conducted so as to be interpretable for stand calibration. To facilitate the required test scheduling, the surveillance panel might direct the TMC to lengthen and shorten reference oil calibration periods within laboratories such that the laboratories incur no net loss (or gain) in calibration status.

10.12 *Donated Reference Oil Test Programs*—The Surveillance Panel is charged with maintaining effective reference oil test severity and precision monitoring. During times of new parts introductions, new or re-blended reference oil additions, and procedural revisions, it might be necessary to evaluate the possible effects on severity and precision levels. The surveillance panel might choose to conduct a program of donated reference oil tests in those laboratories participating in the monitoring system, in order to quantify the effect of a particular change on severity and precision. Typically, the surveillance panel requests its panel members to volunteer enough reference oil test results to create a robust data set. Broad laboratory participation is needed to provide a representative sampling of the industry. To ensure the quality of the data obtained, donated tests are conducted on calibrated test stands. The surveillance panel shall arrange an appropriate number of donated tests and ensure completion of the test program in a timely manner.

10.13 *Test Run Numbering*—Number each test to identify the test stand number and the test run number. Number all runs sequentially. Append repeat calibration runs with a letter that is also sequential (that is, number the first rerun of test 45 as 46A, the second as 47B, and so forth). Maintain the letter suffix sequencing for each calibration test until the calibration has been accepted. Increment the run number for any test start.

10.14 *Humidity Calibration Requirements*—The accuracy of the laboratory's primary humidity measurement system shall be within ± 0.6 g of the humidity measuring chilled mirror dew point hygrometer or equivalent.

10.14.1 Calibrate the primary laboratory humidity measurement system within 48 h before the start of each stand calibration test or during the calibration test at each stand using a chilled mirror dew point hygrometer or equivalent with an accuracy of at least ± 0.55 °C at a dew point of 24 °C.

10.14.2 The calibration consists of a series of paired comparison measurements between the primary system and the chilled mirror dew point hygrometer or equivalent. The comparison period lasts from 20 min to 2 h with measurements taken at 1 min to 6 min intervals, for a total of 20 paired measurements. The measurement interval should be appropriate for the time constant of the humidity measuring instruments.

10.14.3 Ensure that the flow rate is within the equipment manufacturer's specification.

10.14.4 Take all measurements made with the dew point hygrometer or equivalent at atmospheric pressure and correct them to standard pressure conditions (101.12 kPa). Compute the difference between each pair of measurements and calculate the mean and standard deviation of the differences. The absolute value of the mean difference shall not exceed 0.6 g and the standard deviation shall be less than or equal to 0.3 g.

10.14.5 The primary humidity measurement system is deemed calibrated only if both of these requirements are met. If either of these requirements is not met, investigate the cause, make repairs, and recalibrate. Maintain the calibration data for a minimum of two years.

10.15 *Calibration of Piston Deposit Raters*—Each calendar year, each facility shall send at least one Heavy Duty Diesel Piston Rater to the ASTM Standardized Testing Deposit Rating Workshop. Each rater shall rate a minimum of six diesel pistons. If this schedule is not suitable to a particular rater or test laboratory, then make alternative arrangements as soon as possible to have the rater calibrated.

11. Procedure

11.1 *Engine Break-in Procedure*—Open any drain taps at the low points of the combustion air system (if they are installed) during the start of the break-in and warm-ups, and following any shutdowns.

11.1.1 The engine break-in and operational conditions are specified in Annex A12. The total break-in time is 85 min. During the break-in, fix all leaks and make adjustments to ensure proper engine operation. Record the ECM personality module part number and release date.

Documents
Document Sharing Hub

Full document details: ASTM D6681-23

11.1.2 After the break-in period and while the engine is hot, drain the oil from the crankcase, oil cooler, engine oil filter, and weigh scale for 30 min. Then weigh 5800 g ± 50 g of new test oil into the engine.

11.1.3 Start the engine, warm it up, and operate it for 360 h at the test conditions specified in step five of Annex A12 with no oil changes.

11.1.4 Turn on the oil scale pumps once the engine has reached the beginning of Step 5 of the warm-up sequence. Record the oil mass in the oil scale as the full mark at the end of the fourth test hour. Throughout the test, record the oil scale reading at least once every 6 min.

11.1.5 Count test time from the moment the warm-up time is completed. The oil sample frequency is described in Section 8.

11.1.6 Do not remove the cylinder head, piston, or power assembly from the engine during a test.

11.1.7 Reinitialize engine timing calibration after the cam shaft/gear or cylinder head has been removed. See the electronic installation and operation manual. Complete this during the first step of the break-in.

11.2 *Cool-down Procedure*—Except for emergency (uncontrolled) stops, shut the engine down by operating it at conditions shown in Steps 4, 3, 2, and then 1 in Annex A12.

11.3 *Warm-up Procedure*—Use the same procedure used for engine break-in to warm-up the engine for all subsequent starts throughout the test.

11.4 *Shutdowns and Lost Time*—Record the test hours, date, and length of off-test conditions for all occurrences. Record when the engine has early inspections or early test termination with the reasons for the occurrences. If the cool down procedure is not used, identify the shutdown as an *Emergency Shutdown*. A maximum allowed time of off-test conditions is 125 h. If the engine shuts down, immediately stop the oil scale pumps. In the event of an emergency shutdown, leave the engine shut down for 2 h (or more) to allow complete engine cool down before restarting. In order to limit foreign matter entering the combustion chamber and to protect piston deposits, rotate the engine to top dead center of the compression stroke during downtime.

11.5 *Periodic Measurements*—Record all engine conditions listed in Step 5 of Annex A12 as a snapshot at least once every 6 min. Record humidity readings using the laboratory's primary humidity measurement system. Correct the recorded humidity values to standard pressure conditions of 101.12 kPa. Record the fuel position as indicated by the electronic technician at test hours 24, 240, and 360.

11.6 *Engine Control Systems:*

11.6.1 *Engine Coolant*—Pressurize the coolant system to 35.0 kPa ± 7 kPa as shown in Annex A3 to ensure the water does not boil out of the antifreeze. Manually adjust the coolant flow rate by turning the valve on top of the coolant tower to maintain the conditions specified in Annex A12.

11.6.2 *Engine Fuel System*—Control the fuel rate by modifying the fuel limit adjusting the ECM using a facility controller that compares the actual fuel rate to the specified fuel rate listed in Annex A12. See the Electronic Installation and Operation manual for more details. Manually adjust the Fisher regulator to control fuel pressure. Maintain the fuel pressure and temperature as specified in Annex A12.

11.6.3 *Engine Oil Temperature*—Maintain the oil manifold temperature to test specifications as shown in Annex A12. The temperature of the Paratherm NF shall not exceed 165 °C at any time during break-in, warm-up, or testing. Shut off the external oil heater (but not its circulating pump) the moment the engine goes to cool-down.

11.6.4 *Exhaust Pressure*—Set the pressure as specified in Annex A12 using a facility feedback-controlled restrictor valve.

11.6.5 *Intake Air*—Filter, compress, and humidify the inlet air to the conditions specified in Annex A12. Heat (or cool, if necessary) the inlet air to the conditions in Annex A12.

11.7 *Post-Test Procedures*—Remove the piston and ring assembly from the engine. Mark the location of the ring gaps on top of the piston.

11.7.1 *Piston Ring Side Clearances*—Measure the piston ring side clearances prior to removal of the rings to determine the level of deposit formation (see Annex A10). Align ring gaps to the EOT ring gap marks on the top of the piston. Do not force the feeler gages between the ring and groove to disturb or remove the deposits.

11.7.2 *Piston Ratings*—Immerse the piston assembly in mineral spirits (see 7.14) and air-dry it prior to any rating.

11.7.2.1 Process and measure the piston deposits according to the Modified CRC Diesel Piston Rating Method described in ASTM Deposit Rating Manual 20 modified by the directions listed in Annex A13. Rate only two levels of carbon (heavy and light) on the second groove and all lands, and only one level of carbon (light) for the under-crown and cooling groove. Use a combined varnish rating method for the third groove, third land, fourth land, under-crown, and cooling groove (see Annex A13). An example rating worksheet is shown in Appendix X1.

11.7.2.2 Another heavy-duty engine deposit rater shall verify all piston deposit ratings done by the testing laboratory. In special cases where another rater is not available, the rating may be verified by other qualified laboratory personnel. Record the initials of both the rater and the verifying rater.

11.7.3 *Referee Ratings*—The referee laboratory rates the entire piston. Wrap all pistons to be referee-rated in paper with ASTM desiccant chips. Then place them in plastic and seal before shipping to the referee laboratory. Report referee ratings to the TMC within ten days of EOT for calibration tests. Referee-rate piston deposits for all non-reference tests reviewed by Caterpillar.

11.7.4 *Ring End Gap Increase*—Remove all carbon from the rings. If scraping of the rings is necessary, use only a wooden instrument or equivalent. Measure and record the ring end gaps.

11.7.5 *Cylinder Liner Wear*—Use a surface profile measurement to determine the liner wear step in both transverse and longitudinal directions relative to the crankshaft. Remove deposits on the liner above the piston ring travel. Take transverse and longitudinal measurements at the wear step location approximately 13 mm from the top of the liner at four locations. Record the measurements as the liner wear step.

AVA Documents
Document Sharing Hub

Full document details: ASTM D6681-23

11.7.6 *Cylinder Liner Bore Polish*—Section the cylinder liner through the front and rear axis and measure the cylinder liner to determine the amount of bore polishing. Use the liner rating method listed in Annex A13.

11.7.7 *Photographs*—Photograph the piston and rings showing the thrust, anti-thrust, front, rear, and undercrown positions (see Appendix X1). Place the rings on top of the piston to show ring gaps (thrust view) and 180° from gaps (anti-thrust view). Show the piston from the crown down to at least the bottom of the pin bore. Photograph the piston crown and skirt as one assembly. Photograph the bore ID of the sectioned liner (see Appendix X1).

12. Calculation or Interpretation of Results

12.1 *Test Validity Descriptions*—If a test was run for 360 h according to this test method, declare the test valid.

12.1.1 If a test was not run as specified by this test method, the test is operationally invalid. Some examples of an invalid test are: use of non-specified hardware, non-specified assembly methods, a test run whose downtime is greater than 125 h, and so forth. If a test without data acquisition on any controlled parameter has a gap greater than 4 h, the test is operationally invalid.

12.1.1.1 Conduct an engineering review when a control parameter QI value is below the threshold value of zero. A typical engineering review involves investigation of the test data to determine the cause of the below threshold QI. Other affected parameters may also be included in the engineering review. This can be helpful in determining if a real control problem existed and the possible extent to which it may have impacted the test. For example, a test runs with a low QI for fuel flow. An examination of the fuel flow data may show that the fuel flow data contains several over range values. At this point, an examination of exhaust temperatures may help determine whether the instrumentation problem affected real fuel flow versus affecting only the data acquisition.

(1) For reference oil tests, conduct the engineering review jointly with the TMC. For nonreference oil tests, optional input is available from the TMC for the engineering review.

(2) Determine operational validity based upon the engineering review and summarize the decision in the comment section on the appropriate form. It may be helpful to include any supporting documentation at the end of the test report. The final decision regarding operational validity rests with the laboratory.

12.1.2 If a test completes 360 h and the piston, rings, or liner exhibit distress, consider the test non-interpretable. Likewise, if the test is terminated *prior* to completing 360 h for reasons including purchaser request, excessive oil consumption, or piston, ring, or liner distress, then consider the test non-interpretable.

12.2 *Calculations*—Use the same set of data for all calculations and graphs in the test report.

12.2.1 *Quality Index*—Calculate and plot the Quality Index according to the instructions in Annex A2.

12.2.2 *Oil Consumption*—Calculate oil consumption in grams per hour over intervals of 24 h. Delete the first 4 h of readings after an oil add from the linear regression. The linear regression technique is shown in Fig. A6.5 and Fig. A6.6. Calculate the overall average oil consumption, the initial average oil consumption, and end-of-test (EOT) average oil consumption. The initial average is the average of the data points taken at the 24th hour and 48th hour from the oil consumption graph. The EOT average is the average of the data points taken at the 336th hour and 360th hour for a full length test, or for a short-term test it is the average of the last two data points from the oil consumption graph. Calculate the natural logarithmic transformation of the average and EOT oil consumption values using the following equations:

$$\text{transformed average oil consumption} = \ln(\text{average oil consumption}) \quad (2)$$

$$\text{transformed EOT oil consumption} = \ln(\text{EOT oil consumption}) \quad (3)$$

12.2.3 For a period of 24 h including a shutdown, calculate the oil consumption as follows:

12.2.3.1 Do not include the first oil mass amounts removed at 4 h after a shutdown in the linear regression.

12.2.3.2 Calculate the linear regression for the period before the shutdown.

12.2.3.3 Calculate the linear regression for the period after the shutdown.

12.2.3.4 Calculate a time-weighted average from both regressions to obtain the oil consumption for that 24 h period. For example, a test experiences a 7 h shutdown at test hour 12. The slope for the first period of 8 h (hour 4 to 12) is 10.7 g/h, and the slope for the second period of 8 h (hour 16 to 24) is 2.1 g/h. The weighted average is calculated as follows:

$$\text{weighted average} = \frac{(910.7\ \text{g/h})(8\ \text{h}) + (2.1\ \text{g/h})(8\ \text{h})}{8\ \text{h} + 8\ \text{h}} \quad (4)$$

13. Report

13.1 *Forms and Data Dictionary*—For reference oil tests, the standardized report forms and data dictionary for reporting test results and for summarizing the operational data are required. All report forms making up the 1P final report are available at the TMC website (http://www.astmtmc.org). Report values for all the field names listed in the report forms. Some fields might be blank for short-term tests. Report all deposits, wear, and engine operational data as shown in the test report. The data dictionary defines the field lengths, decimal size, data type, units and format for the field names listed in the test report forms.

13.2 *Test Validity Reporting*—Mark whether the test is Valid, Invalid, or Non-interpretable where indicated in the test report. For a *valid stand calibration run*, report the test data to the TMC, and its engineers shall include the test data in the operationally valid database and determine statistical validity using the LTMS method. The LTMS method tracks the severity and precision of stand and laboratory test results. For a complete definition, refer to the LTMS manual that is available from the ASTM Test Monitoring Center.[2] For an *invalid or non-interpretable stand calibration run*, report the test data to the TMC with comments describing why the test is considered invalid or non-interpretable; the TMC shall not include these test data in the operationally valid database. All operationally invalid and non-interpretable calibration tests are reported by

AVA Documents
Document Sharing Hub

Full document details: ASTM D6681-23

TABLE 1 Reference Oil Test Precision

NOTE 1—These statistics are based on results obtained on Test Monitoring Center reference oils between Feb. 19, 1997 and Dec. 6, 2004.

Test Parameter	S_{ip}	i.p.	S_R	R
TGC—top groove carbon, demerits	7.90	22.12	7.99	22.37
WD—weighted piston deposits, demerits	44.9	125.7	46.5	130.2
TLC—top land carbon, demerits	10.08	28.22	10.13	28.36
OC—oil consumption, ln(OC)[A]	0.2660	0.7448	0.2772	0.7762
ETOC—end of test oil consumptions, ln(ETOC)[B]	0.4467	1.2508	0.4490	1.2572

Legend:
$S_{i.p.}$ = standard deviation for intermediate precision.
i.p. = intermediate precision.
S_R = standard deviation for reproducibility.
R = reproducibility.

[A] This parameter is transformed using ln(OC). When comparing two test results on this parameter, first apply this transformation to each test result. Compare the absolute difference between the transformed results with the appropriate (intermediate precision, or reproducibility) precision limit.
[B] This parameter is transformed using ln(ETOC). When comparing two test results on this parameter, first apply this transformation to each test result. Compare the absolute difference between the transformed results with the appropriate (intermediate precision, or reproducibility) precision limit.

the TMC to the ASTM Single Cylinder Diesel Surveillance Panel in periodic testing summaries.

NOTE 1—For a *valid ACC Registered Oil Test*, report the data to the registration organization.[24] For an *invalid or non-interpretable ACC Registered Oil Test*, report the test data to the registration organization with supporting comments describing why the test is considered invalid or non-interpretable. When tests are presented to Caterpillar for review, include the data from all tests that were registered with the registration organization as part of the program.

13.3 *Report Specifics:*

13.3.1 If more than one fuel batch is used, report the fuel batch analysis that is most representative of the fuel in the tank.

13.3.2 Report any causes for any missing or bad test data in the comment section of the Downtime Summary form. If any alternative data acquisition method is used, document it as well.

13.3.3 If a calibration period is extended beyond the normal nine-month period, make a note in the comment section of the Downtime Summary form and attach a written confirmation from the TMC to the test report. List the outcomes of previous calibration runs in the comment section of the Downtime Summary form.

13.3.4 Attach to the test report the fuel analysis provided by the fuel supplier. For calibration tests, attach a copy of the TMC control chart analysis.

NOTE 2—It is recommended that test purchasers include the form shown in Fig. X1.8 when presenting the test results against specification limits, such as those in Specification D4485 or military specifications.

14. Precision and Bias

14.1 Test precision is established on the basis of reference oil test results (for operationally valid tests) monitored by the ASTM Test Monitoring Center. The data are reviewed semi-annually by the Single-Cylinder Diesel Surveillance Panel. Contact the ASTM TMC for current industry data.

14.1.1 Table 1 summarizes reference oil intermediate precision and reproducibility of the test. The tabulated values are current as of Feb. 1, 2005. The Surveillance Panel updates these values as necessary.

14.1.2 *Intermediate Precision Conditions*—Conditions where test results are obtained with the same test method using the same test oil, with changing conditions such as operators, measuring equipment, test stands, test engines, and time.

NOTE 3—Intermediate precision is the appropriate term for this test method rather than repeatability which defines more rigorous within-laboratory conditions.

14.1.2.1 *Intermediate Precision Limit*—(i.p.) The difference between two results obtained under intermediate precision conditions that would, in the long run, in the normal and correct conduct of the test method, exceed the values shown in Table 1 in only one case in twenty. When only a single test result is available, the Intermediate Precision Limit can be used to calculate a range (test result ± Intermediate Precision Limit) outside of which a second test result would be expected to fall about one time in twenty.

14.1.3 *Reproducibility Conditions*—Conditions where test results are obtained with the same test method using the same test oil in different laboratories with different operators using different equipment.

14.1.3.1 *Reproducibility Limit*—(R) The difference between two results obtained under reproducibility conditions that would, in the long run, in the normal and correct conduct of the test method, exceed the values shown in Table 1 in only one case in twenty. When only a single test result is available, the Reproducibility Limit can be used to calculate a range (test result ± Reproducibility Limit) outside of which a second test result would be expected to fall about one time in twenty.

14.1.4 *Bias*—Bias is determined by applying an acceptable statistical technique to reference oil test results and when a significant bias is determined, a severity adjustment is permitted for non-reference oil test results (see TMC Memo 94-200, Lubricant Test Monitoring System document for details[2]).

15. Keywords

15.1 caterpillar 1P test procedure; oil consumption; piston deposits; single cylinder oil test

[24] Registration Systems, Inc., ACC Monitoring Agency, 4139 Gardendale, Suite 205, San Antonio, TX 78229.

AVA Documents
Document Sharing Hub

Full document details: ASTM D6681-23

ANNEXES

(Mandatory Information)

A1. ENGINE AND PARTS WARRANTY

A1.1 *Engine Warranty*—Caterpillar Inc. warrants single cylinder test engines sold by it to be free from defects in material and workmanship for a period of 12 months starting from the date of delivery to the first user. If a defect in material or workmanship is found during the warranty period, Caterpillar provides the replacement parts to be installed by the user. There is no charge to the user for parts furnished by Caterpillar. User at its own expense, shall return all defective parts to Caterpillar at Caterpillar's request. User is responsible for giving Caterpillar timely notice of a warranty failure. User is also responsible for labor costs and any applicable local taxes. Caterpillar is not responsible for failures resulting from abuse, neglect, and/or improper repair. THIS WARRANTY IS EXPRESSLY IN LIEU OF ANY OTHER WARRANTIES, EXPRESSED OR IMPLIED, INCLUDING ANY WARRANTY OF MERCHANTABILITY OR FITNESS FOR PARTICULAR PURPOSE. REMEDIES UNDER THIS WARRANTY ARE LIMITED TO THE PROVISION OF PARTS AS SPECIFIED HEREIN. CATERPILLAR IS NOT RESPONSIBLE FOR INCIDENTAL OR CONSEQUENTIAL DAMAGES.

A1.2 *Engine Parts Warranty*—All parts for the 1Y3700 engine that are nonconforming by reason of faulty manufacture should be discussed with Engine System Technology Development (ESTD).

A1.2.1 The test laboratories should contact ESTD (R.A. Riviere, Telephone: 309-636-5247, Fax: 309-675-1598) when they believe a part is nonconforming:

A1.2.2 ESTD determines if they want the part returned, or provide warranty without viewing the part.

A1.2.3 If ESTD determines that the part is nonconforming without viewing the part, the test laboratories will be asked to return the part to their Caterpillar dealer. ESTD will contact the Dealer and let them know the part is coming and to provide warranty for it.

A1.2.4 If ESTD wants to view the part, they issue a Return Goods Authorization No. (RGA) to the test laboratory. The laboratory fills out the form shown in Annex A9 and sends the part and the form to Caterpillar Inc., Tech Center TC-L, Wing 4 - Rm 406, 14009 Old Galena Rd., Mossville, IL 61552, Att: A.C. Hahn.

A1.2.5 The test laboratories should fax a copy of the RGA claim form to Caterpillar Inc., Tech Services Div., Tech Center Bldg L, Fax: 309-578-4232, Att: A.C. Hahn.

A1.2.6 If ESTD determines that the part is nonconforming, they contact the dealer for the test laboratory and have the dealer provide warranty.

A1.2.7 A sample of the RGA claim form is shown in Annex A9 and should include: return goods authorization no., part name, hours on the part, part no., quantity, engine serial no., date purchased, test laboratory that purchased the part and contact person's name, phone, fax, and address, dealer's name that sold the part, measurements or photographs, or both, to document the nonconformance.

A2. INSTRUMENT LOCATIONS, MEASUREMENTS, AND CALCULATIONS

A2.1 Tables A2.1-A2.6 and Figs. A2.1-A2.5 provide detailed information.

A2.2 *Requirements for the Quality Index Calculation*:

A2.2.1 Round the recorded values in accordance with the specifications listed in Table A2.5.

A2.2.2 Use the values listed in Table A2.6 for all calculations.

A2.2.3 Use data taken at 6 min to calculate the Quality Index.

A2.2.4 Reset data that is greater than the high values listed in Table A2.6 from the Over and Under Range Values column to the high value for that particular parameter.

A2.2.5 Reset data that is less than the low values listed in Table A2.6 from the Over and Under Range Values column to the low value for that particular parameter.

A2.2.6 Round the Quality Index values to the nearest 0.001.

A2.2.7 Report Quality Index values on Form 2 of the test report.

NOTE A2.1—Refer to the DACA II Final Report for calculating the Quality Index involving the loss of test data or bad quality test data.

A2.3 Formula to calculate the Quality Index:

$$QI = 1 - \frac{1}{n}\sum\left(\frac{U+L-2X_i}{U-L}\right)^2 \quad (A2.1)$$

AVA Documents
Document Sharing Hub

Full document details: ASTM D6681-23

where:

X_i = recorded test measurement parameter,
U = upper specification for that parameter,
L = lower specification for that parameter, and
n = total number of data points taken as determined from test length and procedural specified sampling rate.

TABLE A2.1 Instrument Locations

Parameter	Data Acquisition and Control	Engine Computer Sensors	Facility Feedback Control (if separate sensor is required)
Cam speed and timing sensor		A	
Crankshaft speed and timing sensor		B	(at dyno)
Coolant pressure to jug	1		
Coolant temperature to jug	2		
Oil temperature to cooler	3		
Atmospheric pressure		C	
Crankcase pressure	4	D	
Facility air pressure to cooling tower	5		
Oil manifold temperature	6	E	6 or W
Oil sampling valve	7		
Oil manifold pressure	8	F	
Coolant temperature from engine	9	H	9 or X
Coolant pressure from engine		G	
Coolant flow barco delta pressure	10		
Air inlet manifold pressure	(at barrel)	I	(at barrel)
Air inlet manifold temperature	11		11 or Y
Fuel temperature from filter	Z		12
Fuel pressure from head	13		
Fuel flow rate	(at micro motion)		(at micro motion)
Exhaust manifold temperature	14	J	
Exhaust manifold pressure	(at barrel)		(at barrel)
Humidity	(at barrel)		(at barrel)
Air flow rate	(at meter)		
Blowby flow rate	(at meter)		

TABLE A2.2 Thermocouple Diameters, Lengths and Immersion Depths

Location	Diameter, mm	Length, mm, max	Depth, mm ±3 mm
Oil to manifold	not applicable	152	22
Oil to cooler	not applicable	152	27
External heating oil	not applicable	152	27
Coolant in	not applicable	152	40
Coolant out	not applicable	152	26
Inlet air	not applicable	152	57
Exhaust	not applicable	152	67
Fuel	not applicable	152	34

Documents
Document Sharing Hub
Full document details: ASTM D6681-23

TABLE A2.3 Calibration Tolerances

Parameters	Tolerance
Torque	not applicable due to differences within the industry; TMC will verify each laboratory it visits
Fuel flow rate	0.4 g/min
Air flow rate	± 2 % of reading from 10-100 % of calibrated range; ± 0.5 % of FS below 10 % of calibrated range
Humidity	listed in this test method
Temperatures	**°C**
Fuel at filter	0.5
Coolant to jug	0.25
Coolant from engine	0.25
Oil to cooler	0.5
Oil manifold	0.5
External heating oil	0.5
Air inlet manifold	0.5
Exhaust manifold	1.0
Pressures	**kPa**
Fuel from head	0.7
Oil manifold	0.7
Air inlet	0.3
Exhaust	0.3
Crankcase	0.02

TABLE A2.4 Maximum Allowable System Time Constants

Measurements	Time, s
Speed	3.0
Fuel flow rate	20.0
Air flow rate	3.0
Oil mass	TBD
Temperatures	
Fuel at filter	3.0
Coolant to jug	3.0
Coolant from engine	3.0
Oil to cooler	3.0
Oil manifold	3.0
External heating oil	3.0
Air inlet manifold	3.0
Exhaust manifold	3.0
Pressures	
Fuel from head	3.0
Oil manifold	3.0
Air inlet	3.0
Exhaust	3.0
Crankcase	3.0

Documents
Document Sharing Hub

Full document details: ASTM D6681-23

TABLE A2.5 Measurement and Reporting Resolutions

Parameter	Units	Tol	Specification	Minimum Measurement Resolution	Round Values to the Nearest Whole Number
Speed	r/min	±3	1800	1	whole number
Power	kW	approximately	55	0.1	tenth
Torque	N·m	approximately	285	0.1	tenth
Fuel rate	g/min	±1	185	0.1	tenth
Fuel timing	BTC		13		
Humidity	g/kg	±1.7	17.8	0.1	tenth
Oil mass	g			2	whole number
Temperatures °C					
Fuel into head		±3	42	0.1	tenth
Coolant into jug		approximately	86	0.1	tenth
Coolant from head		±3	90	0.1	tenth
Oil to cooler		approximately	128	0.1	tenth
Oil manifold		±3	130	0.1	tenth
External heating oil			165 max	0.1	tenth
Inlet air manifold		±3	60	0.1	tenth
Exhaust manifold		approximately	480	1	whole number
Pressures kPa					
Fuel from head		±20	275	1	whole number
Coolant into jug		approximately	81	1	whole number
Oil manifold		±20	415	1	whole number
Inlet air barrel (abs)		±1	272	0.1	tenth
Exhaust barrel (abs)		±1	265	0.1	tenth
Crankcase		approximately	0.10	0.01	hundredth
Flows					
Coolant	L/min	±2	75	0.1	tenth
Blowby	L/min	approximately	35	1	whole number
Air	kg/h	approximately	315	0.1	tenth

Documents
Document Sharing Hub

Full document details: ASTM D6681-23

TABLE A2.6 Quality Index Calculation Values and Plotting Axis Scale Definitions

Controlled Parameters	units	Quality Index U and L Values[A] L	U	Over and Under Range Values[B] low	high	Plot Axes Ranges[C] min	max	increment
Speed	r/min	1798.530	1801.470	1710	1890	1770	1830	10
Fuel flow	g/min	183.970	186.030	125	245	175	200	5
Humidity	g/kg	16.780	18.820	5	21	5	40	5
Coolant flow	L/min	73.060	76.940	0	82	60	90	5
Coolant out temperature	°C	89.379	90.622	55	125	70	110	5
Oil to Manifold Temperature	°C	128.798	131.202	60	200	120	150	5
Inlet air temperature	°C	59.360	60.640	20	100	50	70	5
Fuel into head temperature	°C	40.885	43.116	0	75	30	60	5
Oil to manifold pressure[D]	kPa	404.384	425.616	0	690	380	450	10
Inlet air pressure	kPa	271.449	272.551	242	302	265	280	5
Exhaust pressure	kPa	264.150	265.850	215	315	250	280	5
Fuel pressure	kPa	271.471	278.529	125	425	230	300	10
Uncontrolled Parameters								
Power	kW					50	60	1
Torque	N·m					230	310	10
Blowby	L/min					5	65	5
Coolant in temperature	°C					75	100	5
Coolant delta	°C					0	10	1
Oil cooler in temperature	°C					120	140	5
Heating oil temperature	°C					120	165	5
Exhaust temperature	°C					450	500	10
Crankcase pressure	kPa					0.0	1.5	0.1
Coolant pressure	kPa					60	95	5

[A] The threshold for operational validity is 0.00.
[B] Only to be used in the calculation of Quality Index and Average and does not affect how process is graphed.
[C] Quality Index Scales are to range from -0.3 to 1.0 with increments of 0.1. The axis for test time is 0 h to 360 h in increments of 30 h. X-axis length should be at least 203 mm; Y-axis length should be at least 140 mm.
[D] Oil pressure operating specifications apply only to 15W-40 oils. Attempt to maintain these limits for all oils. When oils other than 15W-40 oils fall outside these limits, explain these deviations from the limits in the comments section of the test report.

Documents
Document Sharing Hub

Full document details: ASTM D6681-23

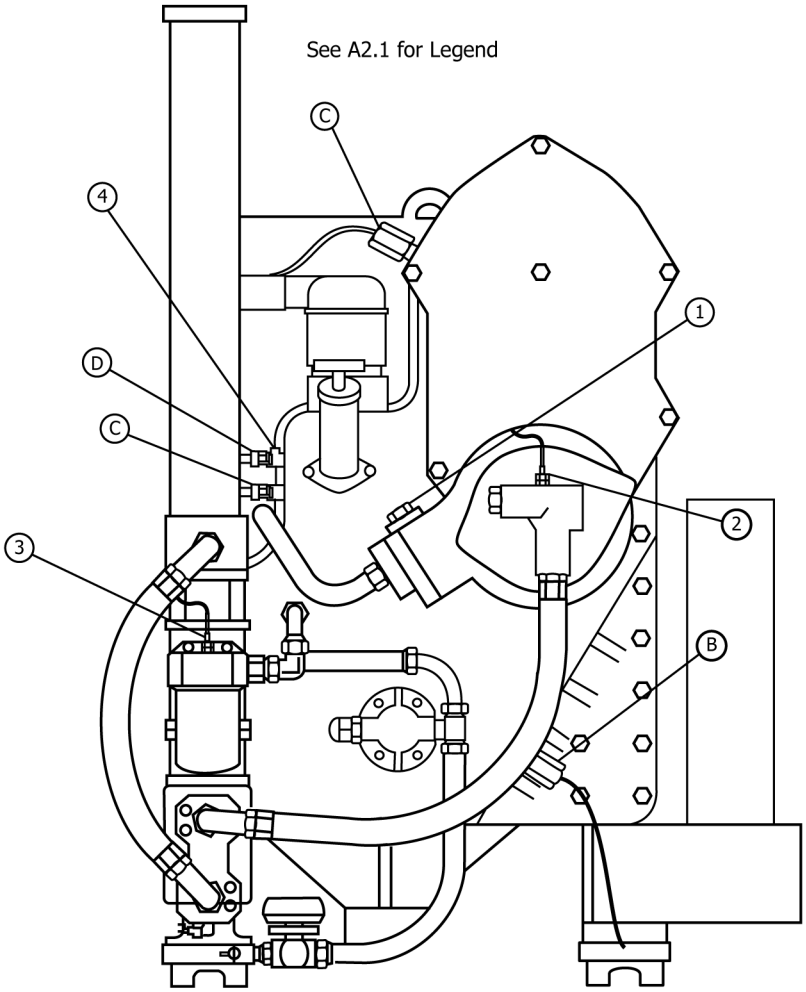

FRONT VIEW

FIG. A2.1 Instrument Locations—Engine Front View

Documents
Document Sharing Hub
Full document details: ASTM D6681-23