This international standard was developed in accordance with internationally recognized principles on standardization established in the Decision on Principles for the Development of International Standards, Guides and Recommendations issued by the World Trade Organization Technical Barriers to Trade (TBT) Committee.

Designation: D6709 – 24

Standard Test Method for Evaluation of Automotive Engine Oils in the Sequence VIII Spark-Ignition Engine (CLR Oil Test Engine)[1]

This standard is issued under the fixed designation D6709; the number immediately following the designation indicates the year of original adoption or, in the case of revision, the year of last revision. A number in parentheses indicates the year of last reapproval. A superscript epsilon (ε) indicates an editorial change since the last revision or reapproval.

INTRODUCTION

This test method is written for use by laboratories that utilize the portions of the test method that refer to ASTM Test Monitoring Center (TMC)[2] services (see Annex A1). Laboratories that choose not to use the TMC services may simply disregard these portions.

The TMC provides reference oils, and engineering and statistical services to laboratories that desire to produce test results that are statistically similar to those produced by laboratories previously calibrated by the TMC.

In general, the Test Purchaser decides if a calibrated test stand is to be used. An organization such as the American Chemistry Council require that a laboratory use the TMC services as part of their test registration process. In addition, the American Petroleum Institute requires that a laboratory utilize the TMC services in seeking qualification of oil against its specifications.

NOTE 1—The advantage of using the TMC services to calibrate test stands is that the test laboratory (and hence the Test Purchaser) has an assurance that the test stand was operating at the proper level of test severity. It should also be borne in mind that results obtained in a non calibrated test stand may not be the same as those obtained in a test stand participating in the ASTM TMC services process.

1. Scope*

1.1 This test method covers the evaluation of automotive engine oils (SAE grades 0W, 5W, 10W, 20, 30, 40, and 50, and multi-viscosity grades) intended for use in spark-ignition gasoline engines. The test procedure is conducted using a carbureted, spark-ignition Cooperative Lubrication Research (CLR) Oil Test Engine (also referred to as the Sequence VIII test engine in this test method) run on unleaded fuel. An oil is evaluated for its ability to protect the engine and the oil from deterioration under high-temperature and severe service conditions. The test method can also be used to evaluate the viscosity stability of multi-viscosity-graded oils. Companion test methods used to evaluate engine oil performance for specification requirements are discussed in the latest revision of Specification D4485.

1.2 Correlation of test results with those obtained in automotive service has not been established. Furthermore, the results obtained in this test are not necessarily indicative of results that will be obtained in a full-scale automotive spark-ignition or compression-ignition engine, or in an engine operated under conditions different from those of the test. The test can be used to compare one oil with another.

1.3 The values stated in SI units are to be regarded as standard. No other units of measurement are included in this standard.

1.3.1 *Exceptions*—The values stated in inch-pounds for certain tube measurements, screw thread specifications, and sole source supply equipment are to be regarded as standard.

1.3.1.1 The bearing wear in the text is measured in grams and described as weight loss, a non-SI term.

1.4 This test method is arranged as follows:

Subject	Section
Introduction	
Scope	1
Referenced Documents	2
Terminology	3
Summary of Test Method	4
Before Test Starts	4.1
Power Section Installation	4.2
Engine Operation (Break-in)	4.3
Engine Operation (Test/Samples)	4.4
Stripped Viscosity	4.5

[1] This test method is under the jurisdiction of ASTM Committee D02 on Petroleum Products, Liquid Fuels, and Lubricants and is the direct responsibility of Subcommittee D02.B0.01 on Passenger Car Engine Oils.

Current edition approved March 1, 2024. Published March 2024. Originally approved in 2001. Last previous edition approved in 2023 as D6709 – 23. DOI: 10.1520/D6709-24.

[2] Until the next revision of this test method, the ASTM Test Monitoring Center will update changes in this test method by means of Information Letters. Information Letters may be obtained from the ASTM Test Monitoring Center, 203 Armstrong Drive, Freeport, PA 16229, Attention: Director, www.astmtmc.org. This edition incorporates revisions in all Information Letters through No. 23–2.

*A Summary of Changes section appears at the end of this standard

Copyright © ASTM International, 100 Barr Harbor Drive, PO Box C700, West Conshohocken, PA 19428-2959. United States

Documents
Document Sharing Hub
Full document details: ASTM D6709-24

Test Completion (BWL) 4.6
Significance and Use 5
Evaluation of Automotive oils 5.1
Stay in Grade Capabilities 5.2
Correlation of Results 5.3
Use 5.4
Apparatus 6
Test Engineering, Inc. 6.1
Fabricated or Specially Prepared Items 6.2
Instruments and Controls 6.3
Procurement of Parts 6.4
Reagents and Materials 7
Reagents 7.1
Cleaning Materials 7.2
Expendable Power Section-Related Items 7.3
Power Section Coolant 7.4
Reference Oils 7.5
Test Fuel 7.6
Test Oil Sample Requirements 8
Selection 8.1
Inspection 8.2
Quantity 8.3
Preparation of Apparatus 9
Test Stand Preparation 9.1
Conditioning Test Run on Power Section 9.2
General Power Section Rebuild Instructions 9.3
Reconditioning of Power Section After Each Test 9.4
Calibration 10
Power Section and Test Stand Calibration 10.1
Instrumentation Calibration 10.2
Calibration of AFR Measurement Equipment 10.3
Calibration of Torque Wrenches 10.4
Engine Operating Procedure 11
Run-In and Flush 11.1
Test Operating Conditions 11.2
Air-Fuel Ratio and Spark Advance 11.3
Air, Off-Gas and Blowby Measurement 11.4
Unscheduled Shutdowns 11.5
Oil Sampling and Oil Addition 11.6
Periodic Measurements 11.7
Final Oil Drain and Oil Consumption Computation 11.8
Operational Validity Criteria 11.9
Test Completion 11.10
Determination of Test Results 12
Oil Analysis 12.1
Test Bearing Weight Loss Determination 12.2
Report 13
Precision and Bias 14
Precision 14.1
Bias 14.2
Use of ASTM Rounding 15
Keywords 16

ANNEXES

ASTM Test Monitoring Center Organization Annex A1
ASTM Test Monitoring Center: Calibration Procedures Annex A2
ASTM Test Monitoring Center: Maintenance Activities Annex A3
ASTM Test Monitoring Center: Related Information Annex A4
Measurement of Connecting Rod Bearing Clearance and Journal Taper Annex A5
Measurement of Main Bearing Clearance Annex A6
Measurement of Piston-to-Sleeve Clearance Annex A7
Control Chart Technique for a Laboratory's Severity Adjustment (SA) Annex A8
Recommended New Liner Honing Procedure Annex A9
Sequence VIII Oil Priming Procedure Annex A10
Alternative Crankcase Breather Configuration Annex A11
Connecting Rod Bearing Cleaning Procedure Annex A12
Electronic Ignition Conversion Annex A13
System Response Procedure Annex A14
Air-Fuel Ratio Measurement Annex A15
Lead Decontamination Procedure Annex A16
Crankshaft Rear Seal Conditioning Annex A17
Report Forms and Data Dictionary Annex A18
Stay-in-Grade Oil Analysis Procedure Annex A19

APPENDIXES

Suggested Method for Salvaging Camshaft Bearing Journals Appendix X1
Data Log Sheets Appendix X2

1.5 *This standard does not purport to address all of the safety concerns, if any, associated with its use. It is the responsibility of the user of this standard to establish appropriate safety, health, and environmental practices and determine the applicability of regulatory limitations prior to use.* Specific precautionary statements are provided throughout this test method.

1.6 *This international standard was developed in accordance with internationally recognized principles on standardization established in the Decision on Principles for the Development of International Standards, Guides and Recommendations issued by the World Trade Organization Technical Barriers to Trade (TBT) Committee.*

2. Referenced Documents

2.1 *ASTM Standards:*[3]

D86 Test Method for Distillation of Petroleum Products and Liquid Fuels at Atmospheric Pressure

D130 Test Method for Corrosiveness to Copper from Petroleum Products by Copper Strip Test

D235 Specification for Mineral Spirits (Petroleum Spirits) (Hydrocarbon Dry Cleaning Solvent)

D240 Test Method for Heat of Combustion of Liquid Hydrocarbon Fuels by Bomb Calorimeter

D323 Test Method for Vapor Pressure of Petroleum Products (Reid Method)

D381 Test Method for Gum Content in Fuels by Jet Evaporation

D445 Test Method for Kinematic Viscosity of Transparent and Opaque Liquids (and Calculation of Dynamic Viscosity)

D525 Test Method for Oxidation Stability of Gasoline (Induction Period Method)

D1319 Test Method for Hydrocarbon Types in Liquid Petroleum Products by Fluorescent Indicator Adsorption

D2422 Classification of Industrial Fluid Lubricants by Viscosity System

D2699 Test Method for Research Octane Number of Spark-Ignition Engine Fuel

D2700 Test Method for Motor Octane Number of Spark-Ignition Engine Fuel

D3231 Test Method for Phosphorus in Gasoline

D3237 Test Method for Lead in Gasoline by Atomic Absorption Spectroscopy

D3343 Test Method for Estimation of Hydrogen Content of Aviation Fuels

D4052 Test Method for Density, Relative Density, and API Gravity of Liquids by Digital Density Meter

D4175 Terminology Relating to Petroleum Products, Liquid Fuels, and Lubricants

[3] For referenced ASTM standards, visit the ASTM website, www.astm.org, or contact ASTM Customer Service at service@astm.org. For *Annual Book of ASTM Standards* volume information, refer to the standard's Document Summary page on the ASTM website.

Documents
Document Sharing Hub

Full document details: ASTM D6709-24

D4294 Test Method for Sulfur in Petroleum and Petroleum Products by Energy Dispersive X-ray Fluorescence Spectrometry
D4485 Specification for Performance of Active API Service Category Engine Oils
D4815 Test Method for Determination of MTBE, ETBE, TAME, DIPE, tertiary-Amyl Alcohol and C_1 to C_4 Alcohols in Gasoline by Gas Chromatography
D7422 Test Method for Evaluation of Diesel Engine Oils in T-12 Exhaust Gas Recirculation Diesel Engine
E29 Practice for Using Significant Digits in Test Data to Determine Conformance with Specifications
E191 Specification for Apparatus For Microdetermination of Carbon and Hydrogen in Organic and Organo-Metallic Compounds (Withdrawn 2024)[4]

2.2 *SAE Standards:*[5]

J183 Engine Oil Performance and Engine Service Classification (Other Than "Energy-Conserving")
J304 Engine Oil Tests

3. Terminology

3.1 *Definitions:*

3.1.1 *air-fuel ratio, n—in internal combustion engines*, the mass ratio of air-to-fuel in the mixture being induced into the combustion chambers. **D4175**

3.1.2 *automotive, adj*—descriptive of equipment associated with self-propelled machinery, usually vehicles driven by internal combustion engines. **D4485**

3.1.3 *blind reference oil, n*—a reference oil, the identity of which is unknown by the test facility.

3.1.3.1 *Discussion*—This is a coded reference oil that is submitted by a source independent from the test facility. **D4175**

3.1.4 *blowby, n—in internal combustion engines*, that portion of the combustion products and unburned air/fuel mixture that leaks past piston rings into the engine crankcase during operation. **D4175**

3.1.5 *critical parts, n*—those components used in the test that are known to affect test severity.

3.1.6 *noncompounded engine oil, n*—a lubricating oil having a viscosity within the range of viscosities of oils normally used in engines, and that may contain anti-foam agents or pour depressants, or both, but not other additives. **D4175**

3.1.6.1 *Discussion*—In this test method noncompounded oil is also known as build-up oil.

3.1.7 *non-standard test, n*—a test that is not conducted in conformance with the requirements in the standard test method; such as running on an uncalibrated test stand, using different test equipment, applying different equipment assembly procedures, or using modified operating conditions. **D4175**

3.1.8 *test start, n*—introduction of test oil into the engine. **D4175**

3.1.9 *wear, n*—the loss of material from a surface, generally occurring between two surfaces in relative motion, and resulting from mechanical or chemical action or a combination of both. **D7422**

3.2 *Definitions of Terms Specific to This Standard:*

3.2.1 *accessory case, n*—the mounting base containing the balancing mechanism, flywheel, and final driveshaft for the power section of the CLR engine.

3.2.2 *build-up oil, n*—see 3.1.6, noncompounded engine oil.

3.2.3 *calibrated power section/test stand combination, n*—one that has completed an operationally valid reference oil test within the previous six months, the results of which fall within industry severity and precision limits as published by the TMC.

3.2.4 *conditioning test run, n*—a full-length Sequence VIII test using a TMC-designated reference oil in a new or newly rebuilt power section to prepare the cast iron parts before conducting routine standard tests with the power section.

3.2.5 *emergency shutdown, n*—the procedure for turning off the engine's ignition without using the prescribed engine cool-down period.

3.2.6 *full-length test, n*—a test of an engine oil conducted using a power section and a test stand that runs 4.5 h run-in, 2 h flush and 40 h at test conditions. (See 10.1.2.1, exception for 10 h stay in grade test).

3.2.7 *new power section, n*—an engine power section consisting of either a new crankcase or complete power section that has no previous oil test history.

3.2.8 *off-gas, n*—gas exiting the power section crankcase breather.

3.2.9 *off-test time, n*—any time that the engine is not operating at the prescribed test conditions.

3.2.10 *oil gallery side cover plate, n*—crankcase cover plate that contains the oil gallery and provision for mounting and driving the oil pump and ignition assembly.

3.2.11 *operationally valid test, n*—an engine oil test that has been conducted in accordance with the conditions listed in this test method.

3.2.12 *power section, n*—the combination of the crankcase assembly, the cylinder block assembly, and the cylinder head assembly, all of which are attached to the accessory case.

3.2.13 *reconditioned power section, n*—an engine power section which has been disassembled, cleaned, and reassembled according to the detailed procedures[6] after completion of either a conditioning test run or a full-length CLR engine oil test.

3.2.14 *reference oil test, n*—a standard Sequence VIII engine oil test of a reference oil designated by the TMC, conducted to ensure that power section and test stand severity falls within industry limits.

[4] The last approved version of this historical standard is referenced on www.astm.org.

[5] Available from Society of Automotive Engineers, Inc., 400 Commonwealth Drive, Warrendale, PA 15096. Request SAE Handbook Vol 3. This standard is not available separately.

[6] Refer to Instructions for Assembly and Disassembly of the CLR Oil Test Engine, available from Test Engineering, Inc., 12718 Cimarron Path, San Antonio, TX 78249.

AVA Documents
Document Sharing Hub

Full document details: ASTM D6709-24

TABLE 1 Power Section Run-in Schedule

Speed, r/min (±25)	Power W (±150)	Spark Advance, ° BTDC (±1)	Time, min (±2)	Total Time, h
1500	1500	25	60	1
2000	3000	25	60	2
2500	3700	35	60	3
3150	3700	35	60	4

3.2.15 *run-in and flush, n*—the initial 4.5 h operation of a new, rebuilt, or reconditioned power section at the beginning of either a conditioning test run or a full-length test.

3.2.16 *scheduled downtime, n*—off-test time that is specifically allowed to include warm-up and cool-down periods as well as shutdown and intermediate bearing weight loss measurements.

3.2.17 *shutdown, n*—the procedure for turning off the engine's ignition following the prescribed engine cool-down period.

3.2.18 *standard test, n*—an operationally valid, full-length Sequence VIII test conducted with a calibrated power section and test stand in accordance with the conditions listed in this test method.

3.2.19 *stay-in-grade (stripped viscosity), n*—the viscosity of the test oil after removal of volatile components and solids, according to the procedure shown in Annex A19.

3.2.20 *test oil, n*—an oil subjected to a Sequence VIII engine oil test.

3.2.20.1 *Discussion*—It can be any oil selected by the laboratory conducting the test. It could be an experimental oil or a commercially available oil. Often, it is an oil that is a candidate for approval against engine oil specifications.

3.2.21 *test stand, n*—the engine accessory case connected to a dynamometer, both mounted to a suitable foundation (such as a bedplate) and equipped with suitable supplies of electricity, compressed air, and so forth, to provide a means for mounting and operating a power section in order to conduct a Sequence VIII engine oil test.

3.3 *Acronyms:*

3.3.1 *BTDC, adj*—before top dead center

3.3.1.1 *Discussion*—It is used with the degree symbol to indicate the angular position of the crankshaft from its position at the point of uppermost travel of the piston in the cylinder.

3.3.2 *EWMA, n*—exponentially-weighted moving average

3.3.3 *LTMS, n*—Lubricant Test Monitoring System

3.3.3.1 *Discussion*—An analytical system in which ASTM calibration test data are used to manage lubricant engine test precision.

3.3.4 *SIG, adj*—stay-in-grade

3.3.4.1 *Discussion*—Capability of multiviscosity-graded oil to stay in grade under test conditions (see 4.5).

3.3.5 *TDC, adj*—top dead center

3.3.5.1 *Discussion*—It is used with the degree symbol to indicate the angular position of the crankshaft from its position at the point of uppermost travel of the piston in the cylinder.

4. Summary of Test Method

4.1 Before every Sequence VIII engine oil test, thoroughly clean the power section of the CLR oil test engine, and measure the power section parts. Install a new or clean used piston, a complete set of new piston rings, a set of new copper-lead connecting rod test bearing inserts (from a batch approved by the ASTM D02.B0.01 Sequence VIII Test Surveillance Panel), and other specified parts as required.

4.2 The power section is installed on an accessory case/test stand. Unleaded fuel is used for the test.

4.3 The engine is first operated for 4 h according to a run-in schedule shown in Table 1 (see 11.1).

4.4 The engine is then operated under specified conditions for 40 h (Table 2). At the end of each 10 h of test conditions, a sample of the test oil is drained from the power section and fresh oil is returned to the power section for continuation of the test.

4.5 An oil sample is taken at the end of the first 10 h of test conditions. When multiviscosity-graded oils are being tested, this sample is used to determine the stay-in-grade (SIG) capabilities of the test oil.

4.6 At the completion of the test, the connecting rod bearing weight loss is determined.

5. Significance and Use

5.1 This test method is used to evaluate automotive engine oils for protection of engines against bearing weight loss.

5.2 This test method is also used to evaluate the SIG capabilities of multiviscosity-graded oils.

5.3 Correlation of test results with those obtained in automotive service has not been established.

5.4 *Use*—The Sequence VIII test method is useful for engine oil specification acceptance. It is used in specifications and classifications of engine lubricating oils, such as the following:

5.4.1 Specification D4485.

5.4.2 API Publication 1509 Engine Oil Licensing and Certification System.[7]

5.4.3 SAE Classification J304.

6. Apparatus

6.1 *Test Engineering, Inc.*—The document "Instructions for Assembly and Disassembly of the CLR Test Engine"[6] provides

[7] American Petroleum Institute, 1220 L Street, NW, Washington, DC 20005.

AVA Documents
Document Sharing Hub

Full document details: ASTM D6709-24

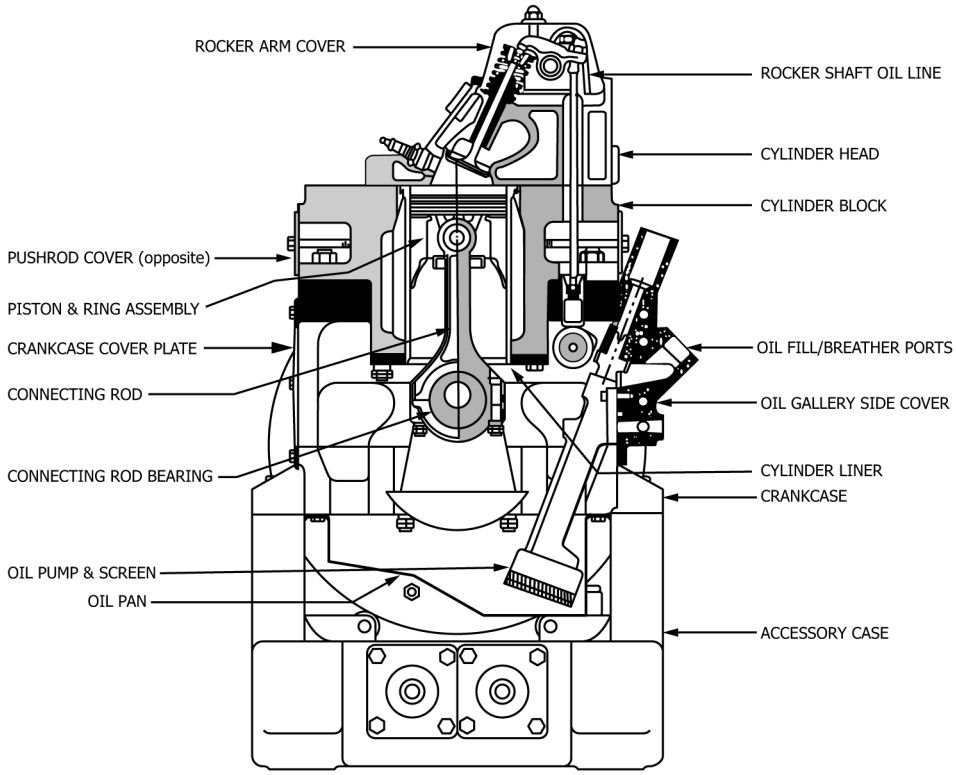

FIG. 1 Sequence VIII Power Section

TABLE 2 Test Operating Conditions

Item	Setting
Speed, r/min	3150 ± 25
Power, W	Adjust power to provide proper fuel flow at specified air-fuel ratio.
Fuel flow, kg/h	2.25 ± 0.11
Air-fuel ratio	13.43 ± 0.5
Jacket outlet coolant Temperature, °C	93.5 ± 1
Difference between jacket Inlet and jacket outlet Coolant temperatures, °C	5.6 ± 1
Gallery oil temperature, °C	
SAE 0W, 5W, 10W	135 ± 1
SAE 20, 30, 40, 50, and multi-viscosity-graded oils	143.5 ± 1
Spark advance, °BTDC	35 ± 1
Oil pressure, kPa	276 ± 14
Crankcase vacuum, Pa	500 ± 120
Exhaust back pressure, Pa	0 to 3.4
Crankcase off-gas, SLH	850 ± 28
Blowby, SLH	record

detailed parts listings, modification instructions, assembly/disassembly instructions, maintenance procedures, and parts replacement requirements. The following is a descriptive listing of some of the test engine and associated parts.

6.1.1 *Test Engine*—Obtain the test engine from Test Engineering Inc. (TEI).[8,9] The test engine is known by various designations such as the L-38 engine, the CLR engine, or the Sequence VIII engine (as used in this test method). It comprises two principal units, the power section and the accessory case (Fig. 1). The power section is a single-cylinder, spark-ignition unit with a cylinder bore of 3.80 in. and a piston stroke of 3.75 in., and displacing 42.5 in.^{3}.

6.1.2 *Test Bearing*—SAE H-24 alloy connecting rod bearing, TEI Part No. 100034-1, from a batch approved by the ASTM Sequence VIII Test Surveillance Panel.

6.1.3 *Test Engine Crankshaft*—Obtain a crankshaft for the CLR test engine, Part No. 100039-1, from TEI. If desired, the crankshaft may be refinished in one of the following two manners:

6.1.3.1 The oil seal and main bearing journals may be refinished by welding material to the journals and regrinding the journals to the original specifications. Do not refinish the connecting rod journal using this procedure.

6.1.3.2 The crankshaft may be refinished by chrome plating[10,9] the oil seal, connecting rod journal, and main

[8] The sole source of supply of the test engine known to the committee at this time is Test Engineering, Inc., 12718 Cimarron Path, San Antonio, TX 78249.

[9] If you are aware of alternative suppliers, please provide this information to ASTM International Headquarters. Your comments will receive careful consideration at a meeting of the responsible technical committee,[1] which you may attend.

[10] The sole source of supply of crankshaft refinishing by chrome plating known to the committee at this time is OH Technologies, Inc., P.O. Box 5039, Mentor, OH, 44061-5039.

AVA Documents
Document Sharing Hub

Full document details: ASTM D6709-24

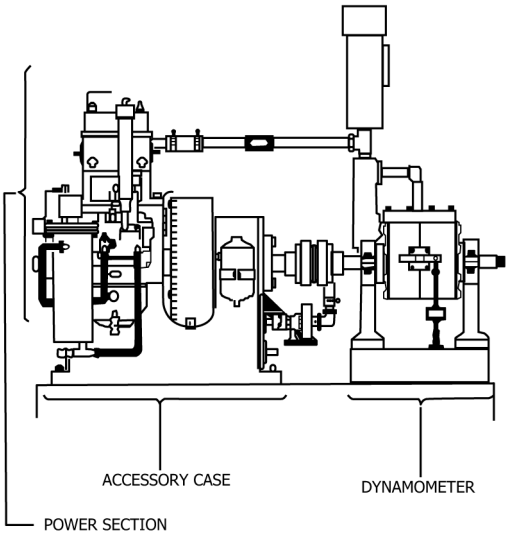

FIG. 2 Typical Sequence VIII Engine Test Stand

bearing journals. When refinishing a crankshaft using this procedure, chrome plate all journals listed.

6.1.3.3 To identify the crankshaft being used in a power section the following identification is required:

(1) S = standard crankshaft,

(2) C = chrome crankshaft, and

(3) R = reconditioned crankshaft.

6.1.4 *Test Engine Piston*—Obtain a piston for the CLR test engine, TEI Part No. 2405, from TEI. If desired, a piston may be reused if it meets the piston-to-liner clearance specifications. A 0.010 in. oversized piston, TEI Part No. 2405-1, may also be used in the Sequence VIII test, provided it meets the piston-to-liner clearance specifications. Do not reuse pistons used in the CLR test engine for L-38 testing or any other testing with leaded fuel in Sequence VIII testing. Clean used pistons according to the following procedure before installation in the test engine.

6.1.4.1 Clean the piston crown of any carbon deposits using aliphatic naphtha and 3M fine-grade Scotch Brite pads. Wet the cleaning pad in the solvent and scrub the deposit. Repeat until all carbon is removed.

6.1.4.2 Spray piston with clean solvent and air dry.

6.1.5 *Piston Ring Assembly*—Use a Dana/Perfect Circle piston ring assembly, Part No. 41274, in the Sequence VIII test engine.[11,9] Hastings Piston Ring, Part No. 41274R, available from TEI, may be used provided that the test laboratory has first completed an acceptable reference oil test using this ring.

6.1.6 *Test Engine Camshaft*—Obtain a camshaft for the CLR test engine, Part No. 8211, from TEI. A remanufactured camshaft, Part No. 8211R may be used if new camshafts are no longer available, provided that the test laboratory has first completed an acceptable reference oil test using a remanufactured camshaft. Obtain remanufactured camshafts from TEI.

6.2 *Fabricated or Specially Prepared Items:*

6.2.1 A typical Sequence VIII engine test stand configuration is shown in Fig. 2.

6.2.2 *Crankcase Ventilation System*—Fig. 3 is a schematic of the required configuration of the crankcase ventilation measurement and control system.

6.2.2.1 Fabricate the airtight rocker cover air and off-gas condensate trap/surge tanks shown in Fig. 3, with provisions for draining and cleaning. The volume of the rocker cover air tank shall be 3.8 L to 5.7 L. The volume of the off-gas tank shall be 38 L to 45 L. Fabricate both tanks from noncorrosive material. Locate the tanks as shown in Fig. 3.

6.2.2.2 *Rocker Cover Air Flow*—Measure the air flow into the rocker cover by using a Sierra Side Track Model 830 flow meter[12,9] capable of measuring 0 L/min to 20 L/min. An optional Dwyer rotameter, Model No. RMC-101,[13,9] with a range of 0 L/h to 1420 L/h may be used for ease of adjustments; however, take actual measurements with the Sierra flow meter. All piping and tubing used to flow air into the rocker cover shall be nominal ID of 9.5 mm.

6.2.2.3 When a closed loop automated control system is employed, use a Badger meter research control valve, Model No. 1002-GCN36-SVCSC-LN36,[14,9] (see Note 2) to control the rocker cover air flow. When using a manual control system instead of the automated system, install a Swagelok ⅜ in. metering valve, Part No. SS-6L,[15] to control the air flow into the rocker cover.

NOTE 2—The letter prior to the last dash in the model number defines the trim size. Use the trim that gives the best system control.

6.2.2.4 Install a reservoir to facilitate oil additions during test operation at the rocker cover inlet for the crankcase ventilation air. The construction of the reservoir is left up to the laboratory, but the reservoir needs to be airtight between oil additions and have an outlet to attach to the rocker cover air control system.

6.2.2.5 Construct the off-gas breather[15] as shown in Fig. 4 using American Standard Schedule 40, or equivalent, non-galvanized pipe fittings. Apply sealant to the threads during assembly. Install the breather in the breather port of the oil gallery side cover (see Fig. 5) of the engine power section. Fig. A11.1 shows freeze plug detail in an alternative configuration to that in Fig. 4.

6.2.2.6 *Crankcase Off–Gas Flow*—Measure the crankcase off-gas flow by using a Daniels Honed Orifice Flange Flow Section, Model No. H1905T-½ in.,[16,9] with orifice plate,

[11] The sole source of supply of the Dana/Perfect Circle piston ring assembly Part No. 41274 known to the committee at this time is Dana Corp., Perfect Circle Division, 1883 E. Laketon Ave., Product Distribution Center, Muskegon, MI 49442-6123.

[12] The sole source of supply of Sierra Side Track flow meters known to the committee at this time is Sierra Instruments Inc., 5 Harris Ct, Building L, Monterey, CA 93940.

[13] The sole source of supply of Dwyer instrumentation known to the committee at this time is Dwyer Instruments Inc., P.O. Box 60725, Houston, TX 77205.

[14] The sole source of supply of Badger valves known to the committee at this time is Badger Meter Industrial Div., 6116 East 15th St., P.O. Box 581390, Tulsa, OK 74158-1390.

[15] Except for the stainless steel wool and screens, parts for the construction of the crankcase breather may be obtained from many commercial sources. The part numbers given identify the components available from McMaster Carr, Chicago, IL.

[16] The sole source of supply of Daniels flow sections known to the committee at this time is Daniel Flow Products Inc., Flow Measurement Products Div., P.O. Box 19097, Houston, TX 77224.

AVA Documents
Document Sharing Hub

Full document details: ASTM D6709-24

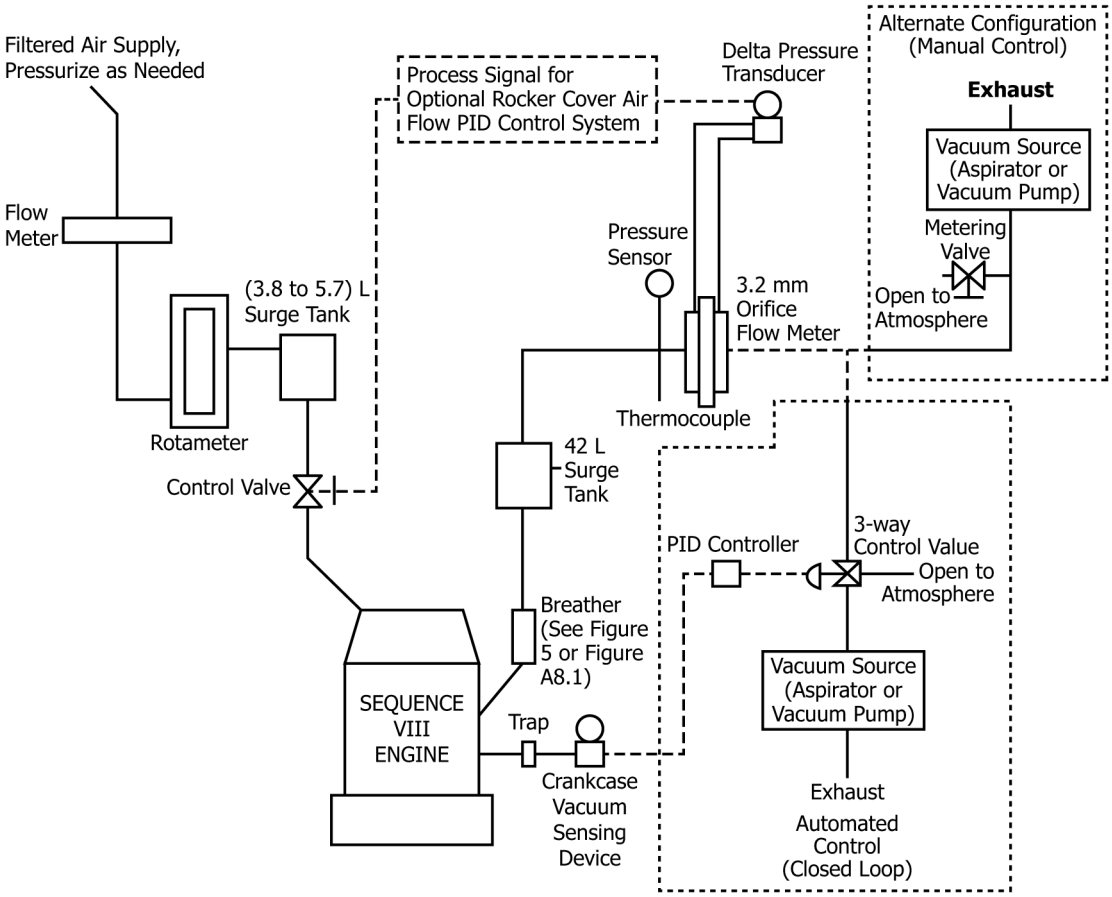

FIG. 3 Standard Crankcase Ventilation System for the Sequence VIII Power Section

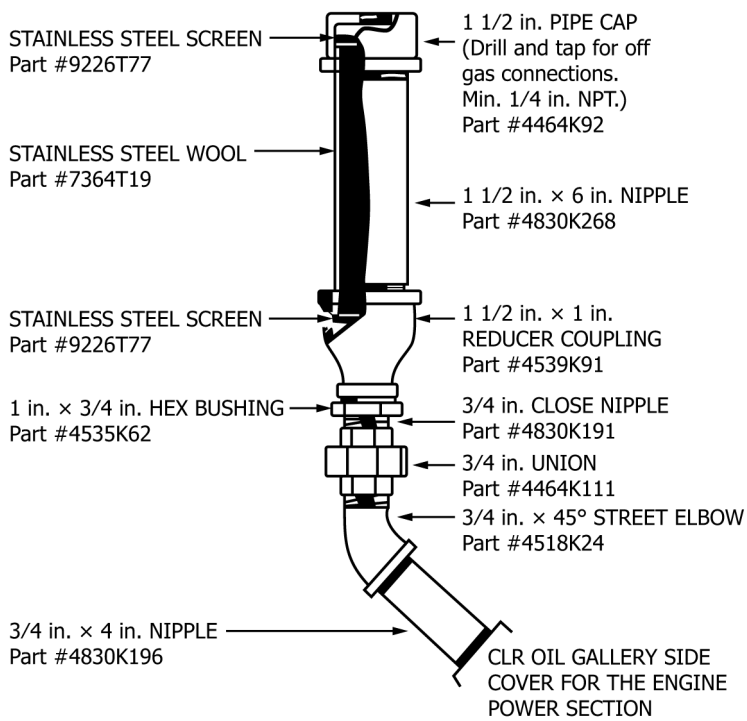

FIG. 4 Crankcase Breather Detail

F-150-⅛ in., and a Rosemount differential pressure transducer,

Documents
Document Sharing Hub
Full document details: ASTM D6709-24

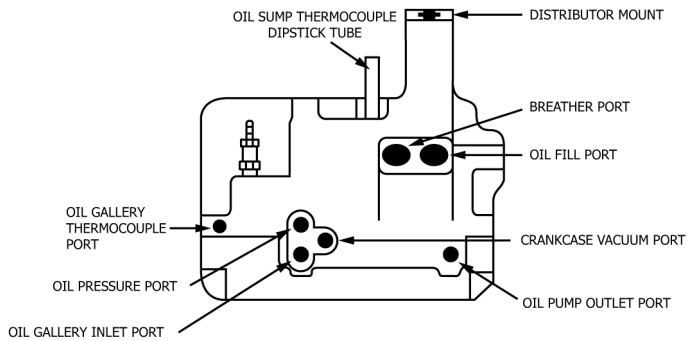

FIG. 5 Oil Gallery Side Cover

Model No. 1151DP-3-S-22-D1B2.[17,9] Mount the flow section horizontally. The transducer may be set up as square root extracting to aid in interfacing with the readout. Locate temperature and pressure measurement devices at the inlet of the off-gas measurement apparatus as shown in Fig. 3.

6.2.2.7 When a closed loop automated control system is employed, use a Badger meter research control valve, Model No. 1002-TCN36-SVCSA-LN36, to control the crankcase vacuum. When using a manual control system instead of the automated control system, install a Swagelok ⅜ in. metering valve, Part No. SS-6L, to control the crankcase vacuum. Both systems are shown in Fig. 3.

6.2.2.8 Use a Vaccom vacuum aspirator, Model No. JD-90M,[18,9] or a vacuum pump as a vacuum source.

6.2.2.9 *Crankcase Off–Gas Inlet Pressure*—Use a Dwyer Magnehelic, Model No. 2320, or a Sensotech pressure transducer, Model No. TJE-756-05, to measure the off-gas air pressure. Locate the sensor at the inlet of the off-gas air flow apparatus as shown in Fig. 3.

6.2.2.10 *Crankcase Off–Gas Inlet Temperature*—Measure the off-gas temperature with a J-type thermocouple, 3.2 mm in diameter. Position the thermocouple tip in the middle of the air stream and expose no more than 50 mm of the sheath to ambient air. Locate the thermocouple at the inlet of the off-gas flow measurement apparatus as shown in Fig. 3.

6.2.3 *Oil Filter*—Install a Racor, Model LFS-62 or LFS-55,[19,9] oil filter as shown in Fig. 6. Use suitable hydraulic hose and fittings.[20]

6.2.3.1 *Oil Drain Valves*—Locate oil drain valves at points no higher than the bottom of the oil pan or the vertically mounted oil heater.

6.2.4 *Oil Heater*—Install the oil heater as shown in Fig. 7. Use suitable hydraulic hose and fittings.[20]

6.2.5 *Power Section Cooling System*—Install a non-pressurized cooling system consisting of a heat exchanger, water pump, coolant throttling valve, sight glass, and tower (see Fig. 8). Use American Standard Schedule 40, or equivalent, non-galvanized pipe fittings 20 mm in diameter and apply sealant to the threads during assembly.

6.2.5.1 Use a water-cooled heat exchanger. A heat exchanger of this type, suitable for this application, is available as American Heat Exchanger, Part Number 5-030-03014-011.[21,9]

6.2.5.2 Install a gate-type coolant throttling valve 20 mm in diameter on the output side of the coolant pump to maintain the specified temperature differential between the coolant flowing into, and that flowing out of, the power section jacket.

6.2.5.3 The coolant pump is an electrically driven centrifugal pump with a flow of approximately 18.9 L/min at water head pressure of 95.5 kPa. The Grainger[22] Part No. 1P831 has been found suitable.

6.2.5.4 Install a sight glass[23,9] located downstream of the cylinder head to permit detection of air entrainment.

6.2.5.5 Fabricate the tower using non-galvanized metal. Make it approximately 90 mm in diameter and 410 mm long. Fashion a loose-fitting cover for it. Install a level gage, positioned to give a mid-scale reading when the system is filled. The system shall have a minimum capacity of 7.5 L.

6.2.6 *Exhaust System*—Use either a water-quenched system or a dry system.

6.2.7 *Ignition System*—An electronic ignition system is required. The required system is illustrated in Figs. A13.1-A13.10. The TMC and the Sequence VIII Surveillance Panel review and approve other electronic ignition system configurations prior to use.

6.3 *Instruments and Controls:*

6.3.1 *Dynamometer*—Use a dynamometer and control system capable of maintaining the specified engine operating test conditions (see Section 11). Speed measurement shall have a minimum accuracy of ±0.5 % of reading, and power minimum measurement accuracy of ±2 % of reading.

6.3.2 *Fuel Flowmeter or Fuel Weigh System*—Use a system with a range of 0 kg/h to 4.5 kg/h, and having a minimum accuracy of 1 % of reading and a repeatability of 0.5 %.

[17] The sole source of supply of Rosemount transducers known to the committee at this time is Rosemount Inc., 4001 Greenbriar, Ste 150B, Stafford, TX 77477.

[18] The sole source of supply of Vaccom aspirators known to the committee at this time is McKenzie Air Industries, 18523 IH 35 North, Shertz, TX 78108.

[19] The sole source of supply of the oil filters known to the committee at this time is Parker Hanifin Corp., Racor Division, 3400 Finch Road, Modesto, CA 95354.

[20] Aeroquip ⅜ in. (10 mm) (inside diameter) hydraulic hose has been used successfully to plumb the oil filter and oil heater; select hose of a specification to cover temperatures and pressures encountered in Sequence VIII engine oil testing.

[21] The sole source of supply of the heat exchanger known to the committee at this time is Compressor Engineering, 625 District Dr., Itasca, IL 60143.

[22] Any Grainger national branch location.

[23] The sole source of supply of a sight glass of this type, suitable for this application (Gitts-Part No. 3063-27) known to the committee at this time is Edward Fisher Co., 118 S. Wabash, Chicago, IL 60616.

AVA Documents
Document Sharing Hub

Full document details: ASTM D6709-24

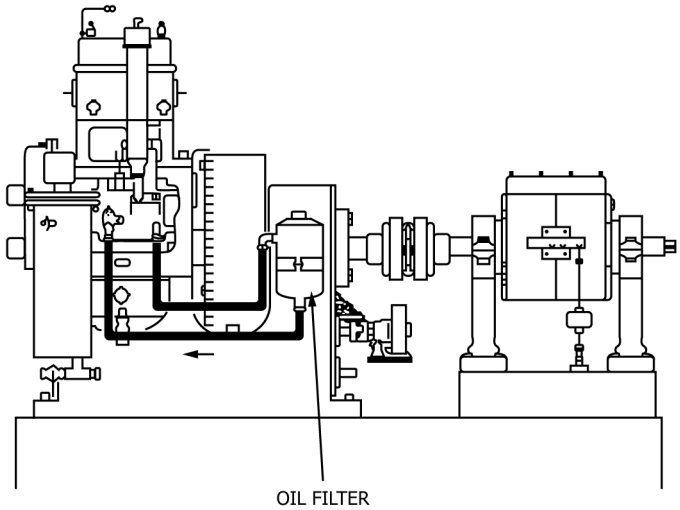

FIG. 6 Oil Filter Installation

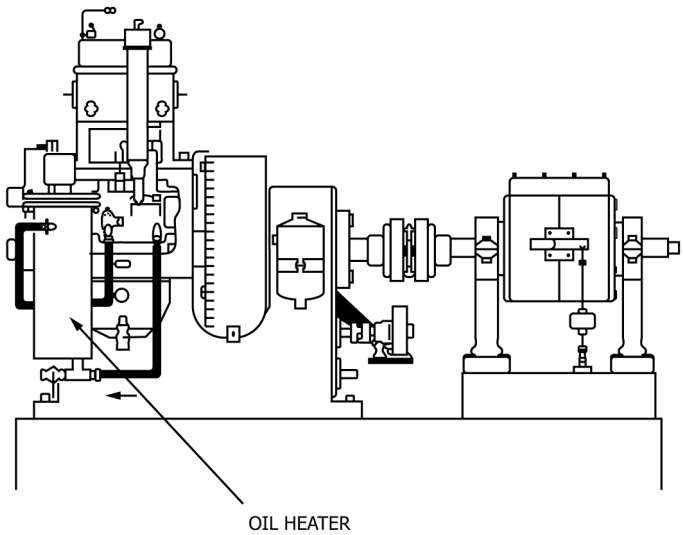

FIG. 7 Oil Heater Installation

6.3.3 *Air–Fuel Ratio Measurement System*—Use a system with a calibration capability of the equivalent of ±0.5 air-fuel ratio number. The following are acceptable methods for determination of air-fuel ratio:

6.3.3.1 *Calibrated Electronic Exhaust Gas Analyzer*—Use sample gases for the calibration. Follow the directions in Annex A15 to determine air-fuel ratio.

6.3.3.2 *AFR Analyzer/Lambda Meter*—The air fuel ratio (AFR) analyzer shall have a measurement range of 11.00 to 18.00 for AFR with 1.85 H/C and 0.00 O/C, where: H is hydrogen, C is carbon and O is oxygen.

6.3.3.3 When a Lambda meter is used, locate the exhaust sensor within 150 mm ± 50 mm of the cylinder head exhaust outlet mating surface.

6.3.4 *Pressure Measurement:*

6.3.4.1 *Crankcase Vacuum*—As shown in Fig. 3, connect a line trap and an appropriate sensor to the crankcase at the hole above and to the right of the oil heater inlet hose connection on the oil gallery side cover. See Fig. 5 for the location of the crankcase vacuum port. Measurement resolution of the pressure

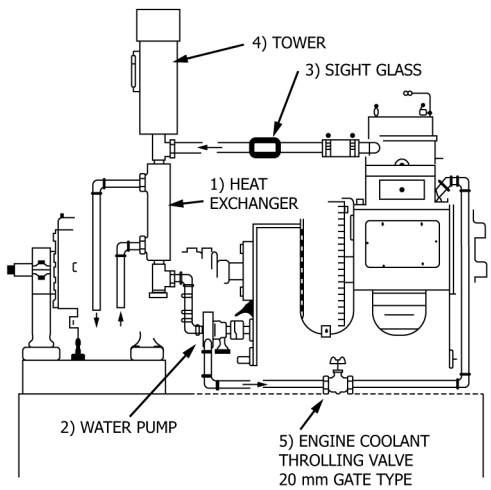

FIG. 8 Cooling System

Documents
Document Sharing Hub
Full document details: ASTM D6709-24

an accuracy of 1 % in the specified range of 0.500 kPa ± 0.120 kPa are required.

6.3.4.2 *Exhaust Back Pressure*—Connect an appropriate sensor to the exhaust back-pressure tap at a point within 100 mm of the cylinder head exhaust flange. Sensor accuracy of ±10 % of reading and resolution of 340 Pa are required.

6.3.4.3 *Intake Manifold Vacuum*—Measure the intake manifold vacuum at the elbow of the intake manifold by means of a sensor having an accuracy of 1 % and a resolution of 680 Pa.

6.3.4.4 *Oil Pressure*—Measure the oil pressure with an appropriate sensor having an accuracy of ±2 % and a resolution of 7 kPa, connected to the point shown in Fig. 5.

6.3.5 *Temperature Measurement*—The test requires the accurate measurement of oil and coolant temperature. Exercise care to ensure temperature measurement accuracy. Follow the guidelines of Research Report RR:D02-1218.[24]

6.3.5.1 Check all temperature devices for accuracy at the temperature levels at which they are to be used. Iron-Constantin (Type J) thermocouples are specified for temperature measurement.

6.3.5.2 All thermocouples shall be premium grade, sheathed types with premium wire. Use thermocouples of 3.2 mm diameter. Thermocouple lengths are not specified but shall not have greater than 50 mm of thermocouple sheath exposed to ambient laboratory temperature.

6.3.5.3 Some sources of thermocouples that have been found suitable for this application are, Leeds and Northrup, Conax, Omega, Revere, and Thermo Sensor.

6.3.5.4 System quality shall be adequate to permit calibration to ±0.56 °C for individual thermocouples.

6.3.6 *Thermocouple Location and Length*—All thermocouple tips shall be located in the center of the stream of the medium being measured unless otherwise specified.

6.3.6.1 *Coolant Temperatures*—Locate the thermocouples used to measure the coolant inlet and outlet temperatures within 100 mm of the inlet and outlet bosses on the power section.

6.3.6.2 *Air Inlet Temperature*—Measure the air inlet temperature with an exposed thermocouple or thermometer located at the center of the air tube, 38 mm above the carburetor air horn.

6.3.6.3 *Oil Gallery Temperature*—Measure oil gallery temperature at the front main bearing passage (see Fig. 5). The immersion length for these thermocouples is 35 mm.

6.3.6.4 *Crankcase Off–Gas Temperature Measurement*—Measure the off-gas temperature at the outlet side of the crankcase breather assembly. Fig. 3 shows a recommended system.

6.4 *Procurement of Parts*—Obtain information on the CLR Oil Test Engine (see 6.1.1) and parts for it from TEI. Users of this test method shall comply with CLR Oil Test Engine Shop Manual[6] and the latest supplements (Information Letters and Memoranda) available from the TMC.

[24] Supporting data have been filed at ASTM International Headquarters and may be obtained by requesting Research Report RR:D02-1218. Contact ASTM Customer Service at service@astm.org.

7. Reagents and Materials

7.1 *Reagents:*

7.1.1 A 1:3 mixture of hydrochloric acid and deionized water. (**Warning—**The laboratory shall establish proper safety procedures for handling and disposal of this reagent.)

7.1.2 A 1:8 mixture of baking soda and water. (**Warning—**The laboratory shall establish proper safety procedures for handling and disposal of this reagent.)

7.2 *Cleaning Materials:*

7.2.1 *Abrasive Paper,*[25]400 grit, 600 grit, 800 grit, wet or dry.

7.2.2 *Crocus Cloth.*[25]

7.2.3 *Mylar Tape.*[25]

7.2.4 *Organic Solvent-Penmul L460*[26,9](**Warning—**Combustible. Health hazard.).

7.2.5 *Pentane (Solvent),* ≥99 %, high-performance liquid chromatography grade (**Warning—**Flammable. Health hazard).

7.2.6 *Solvent*—Use only mineral spirits meeting the requirements of Specification D235, Type II, Class C for Aromatic Content 0 % volume to 2 % volume, Flash Point (61 °C, min) and Color (not darker than +25 on Saybolt Scale or 25 on Pt-Co Scale). (**Warning—**Combustible. Health hazard.) Obtain a Certificate of Analysis for each batch of solvent from the supplier.

7.2.7 *Tap Water,* heated to between 66 °C and 82 °C.

7.3 *Expendable Power Section-Related Items:*

7.3.1 *Sealing Compounds*—Approved sealing compounds, including pipe thread compound and gasket cement are:

7.3.1.1 *Perfect Seal Sealant No. 4*,[27]

7.3.1.2 *Permatex Ultra Blue 77B*,[27] identified and packaged as any of the following:

(1) 81724 95 g carded tube
(2) 85519 269 g PowerBead (Trademarked) can
(3) 81725 369 g cartridge
(4) 82170 95 g tube

7.3.1.3 *Permatex 3H, Permatex High Tack 99 MA*,[27]

7.3.1.4 *Dow Corning High Vacuum Grease*,[27]

7.3.1.5 *Dow Corning RTV Gray 3154*, and[27]

7.3.1.6 *Petroleum Jelly*.[27]

7.3.2 *Power Section Build-Up Oil.*[28]

7.4 *Power Section Coolant*—Use deionized or distilled water for the power section coolant, plus a suitable inhibitor such as Pencool 2000[29,9] used at 31 mL/L of water. Such water purchased from a commercial source is suitable.

7.5 *Reference Oils*—Conduct test periodically on reference oils supplied by the TMC, to document the test severity of a

[25] The sand paper and Mylar tape may be obtained from many commercial sources.

[26] The sole source of supply of Penmul L460, a registered trademark, known to the committee at this time is Penetone Corp., 7400 Hudson Ave., Tenafly, NJ 07670.

[27] These may be obtained from many commercial sources.

[28] Noncompounded oil ISO VG 46 (SAE 20) (see Classification D2422) is available through lubricant marketers. One supplier is Exxon-Mobil Oil Corp. The Exxon-Mobil product is designated EF-411, and is available from Exxon-Mobil Oil Corp., P.O. Box 66940, AMF O'Hare, IL 60666, Attn: Illinois Order Board.

[29] The sole source of supply of Pencool 2000 known to the committee at this time is The Penray Co, Inc., 1801 Estes Ave., Elk Grove, IL 60007.

AVA Documents
Document Sharing Hub

Full document details: ASTM D6709-24

given power section and test stand, and the overall operation of the test. Use 8 L of reference oil for each test.

7.6 *Test Fuel*—Use Haltermann Products KA24E Test Fuel.[30,9] The specification for KA24E Test Fuel can be obtained from the ASTM Test Monitoring Center website, www.astmtmc.org. (**Warning—**Flammable. Health hazard.)

7.6.1 *Fuel Batch Approval*—New batches of KA24E Test Fuel are approved for use by the Subcommittee D02.B0.01 Sequence IVA Surveillance Panel.[31]

7.6.2 *Fuel Batch Analysis*—Details are available from Subcommittee D02.B0.01 Sequence IVA Surveillance Panel.

7.6.3 *Laboratory Storage Tank Fuel Analysis*—Details are available from Subcommittee D02.B0.01 Sequence IVA Surveillance Panel.

7.6.4 *Fuel Batch Shipment and Storage*—Details are available from Subcommittee D02.B0.01 Sequence IVA Surveillance Panel.

8. Test Oil Sample Requirements

8.1 *Selection*—The sample of test oil shall be representative of the lubricant formulation being evaluated and shall be uncontaminated.

8.2 *Inspection*—New oil sample baseline inspection requirements are described in 12.1.1.

8.3 *Quantity*—The fresh oil required to complete the test is approximately 7 L. It is recommended that a test laboratory have on hand approximately 8 L when starting a test to allow for inadvertent losses.

9. Preparation of Apparatus

9.1 *Test Stand Preparation:*

9.1.1 *Instrumentation Calibration*—Check the calibration of temperature sensors, flowmeters, pressure sensors, and dynamometer load indicator as required by the type of instrumentation being used. Details on calibration, of both power section and test stand, and of instrumentation, are given in 10.2.

9.1.2 *Preventive Maintenance*—Refer to and comply with "instructions for Assembly and Disassembly of the CLR Oil Test Engine" regarding details pertaining to care and maintenance of the accessory case.

9.2 *Conditioning Test Run on Power Section*—A new power section cannot be calibrated, nor is it suitable for test purposes, until a full-length, conditioning test run has been conducted on the power section. The conditioning test run is required to prepare the cast iron parts of such a power section, and the oil used for the run is a reference oil designated by the TMC. Upon completion of the conditioning run, recondition the power section as described in 9.4 before conducting a test. (A conditioning run on a reference oil shall not qualify as a reference test. Testing can commence only after a conditioning run and a reconditioning.)

9.3 *General Power Section Rebuild Instructions*—Assemble the power section according to the detailed instructions found in the assembly manual. Compliance with all provisions of the assembly manual is mandatory. However, in cases of disparity, the explicit instructions contained in this test method take precedence over the service manual. Information letters and memoranda issued by the TMC shall supersede this manual. Failure to follow the instructions provided in this document and related TMC information letters or memoranda, or both, may cause incorrect test results.

9.4 *Reconditioning of Power Section After Each Test*—Recondition a previously used power section before the start of a new test. Decontaminate power sections previously used with leaded fuel using the procedure shown in Annex A16 before use. Follow the parts replacement and cleaning procedures described in the following sections.

9.4.1 *New Parts*—Use the following new parts:

9.4.1.1 Piston and piston ring assembly,

NOTE 3—A used piston may be reused if it meets the requirements of 6.1.4.1 and the original piston pin is retained.

9.4.1.2 H-24 alloy connecting rod test bearing,

9.4.1.3 All gaskets, seals, O-rings, and

9.4.1.4 All parts that are excessively worn or that do not permit maintenance of the operating clearances specified in this method or in "Instructions for Assembly and Disassembly of the CLR Oil Test Engine."

9.4.2 *Documented Parts*—The parts supplier provides records, stating source codes and additional information such as batch code, lot number, and so forth. It is the responsibility of the laboratory to maintain records documenting these parts by proper identification numbers. The parts that require documentation are: (*1*) crankshafts, (*2*) camshafts, (*3*) connecting rod bearings, (*4*) crankshaft main bearings, (*5*) camshaft bearings, (*6*) piston rings, (*7*) connecting rods, (*8*) pistons, and (*9*) cylinder sleeves.

9.4.2.1 *Critical Parts*—The crankshaft and connecting rod are considered critical parts and are to be used as received from the supplier(s). If either is replaced during a reference period, the calibration status of the stand/power section is voided. A reference oil test meeting the calibration requirements of Section 10 is required before continuing non-reference oil testing.

9.4.3 *Parts Cleaning Procedures:*

9.4.3.1 *Oil Pump, Oil Pressure Regulator, Distributor, and Crankcase Breather*—Remove the distributor and crankcase breather. Remove the oil pump and oil pressure regulator with the oil gallery side cover plate. Clean this cover plate thoroughly using Penmul[26,9] (**Warning—**Combustible. Health hazard.) and a fiber brush or swab, then rinse the cover plate with tap water heated to 65 °C to 82 °C, and rinse it again with mineral spirits[32] (**Warning—**Combustible. Health hazard.). Carefully spray the oil pump, oil pressure regulator, and distributor with mineral spirits to remove deposits. Disassemble, inspect, and clean the crankcase breather with mineral spirits.

[30] The sole source of supply of Haltermann Products KA24E Test Fuel known to the committee at this time is Haltermann Products, Ten Lamar, Ste 1800, Houston, TX 77002.

[31] Contact the TMC for address information for the D02.B0.01 Sequence IVA Surveillance Panel.

[32] Mineral spirits meeting the limited Specification D235, Type II, Class C requirements are available from petroleum solvent suppliers.

AVA Documents
Document Sharing Hub

Full document details: ASTM D6709-24

9.4.3.2 *Power Section*—Dismantle the power section completely before each test and thoroughly clean the parts by soaking them in Penmul for a minimum of 4 h. Remove remaining deposits on the crankshaft using fine or very fine 3M Scotch Brite pads.[33,9] After the minimal soak and cleaning period of 4 h, rinse the parts in hot tap water, (65 °C to 82 °C) to remove all traces of Penmul, and then rinse them with mineral spirits.[32] (**Warning—**Insufficient rinsing may allow Penmul carryover to the test oil causing increased severity in H-24 alloy bearing weight loss.)

9.4.3.3 *Alternative Methods*—The above-noted parts may be cleaned using a heated bath or temperature controlled automated parts washer. Allow the parts to cool before assembly or measurement. Protect parts cleaned by either method in accordance with 9.4.3.4.

9.4.3.4 *Protection of Parts*—Immediately after cleaning, protect all parts against moisture and contamination by the use of build-up oil, vapor-proof plastic bag, or both. Give special attention to cleaning the following: (*1*) sludge trap, (*2*) oil passages in crankshaft, in cylinder block, in crankcase and to valve lifters, (*3*) oil passage to rocker assembly, and (*4*) oil passage to timing gear oil jet.

9.4.3.5 *Oil Heater Cleaning*—Prior to each reference oil test, clean the oil heater case and inner cartridge with Penmul to remove all residues, deposits, and foreign material. Use a wire brush or emery cloth as needed to completely remove residues and deposits, then rinse with hot tap water and spray the case and cartridge with mineral spirits[32] and air dry. Prior to every test between references, the oil heater can be cleaned by circulating mineral spirits through it for 15 min and then air drying.

9.4.3.6 *H-24 Alloy Test Bearing*—Mark the bearing before using it in a test with the letters T (top) and B (bottom) on the backs of the bearing tangs, using a vibrating engraver. Make no other marks on the bearing until after the final weighing. Prior to initial weighing and prior to weighing at the end of a test, clean the bearing halves according to the procedure given in Annex A12. (Use fresh, clean mineral spirits[32] and pentane for cleaning.) (**Warning—**Flammable. Health hazard.)

9.4.4 *Cylinder Liner Finishing*—To minimize the effect of changes in oil consumption, finish a new TEI cylinder liner according to the honing procedure in Annex A9. The method for finishing a used liner is at the laboratory's judgment.

9.4.4.1 *Cleaning Procedure and Rust Prevention*—After the desired finish is achieved, spray the liner with mineral spirits, and air dry it. Apply build-up oil to the liner surface. Wipe the liner interior with a cloth or paper towel wetted with build-up oil until the wiping material appears clean after wiping. Coat the liner with build-up oil.

9.4.5 *Piston-to-Sleeve*—Determine the piston-to-sleeve clearance in accordance with the procedure given in Annex A7.

9.4.6 *Crankshaft Rear Seal Surface Conditioning*—Control of oil and air leakage at the crankshaft rear seal may be improved if the crankshaft rear seal surface is conditioned prior to each test in accordance with the recommendations of Annex A17.

9.4.7 *Crankshaft Journal Conditioning:*

9.4.7.1 Use crankshafts with all journals having out-of-round measurements of 0.025 mm or less.

9.4.7.2 Since the test method is primarily designed to measure bearing weight loss, maintain the crankshaft rod bearing journal such that weight loss due to abnormal mechanical wear is minimized. Exercise care when handling the crankshaft to prevent nicking the journal surfaces. Should nicks be observed, lightly dress the journal with a dressing stone. Remove as little metal as possible. Observe bearing wear pattern for the test following this process to confirm that mechanical wear is at a practical minimum.

9.4.7.3 Polish the connecting rod bearing journal according to the following guidelines. Mount the crankshaft on centers or position the main bearing journals in V-blocks. Prepare strips of polishing medium (only a wet/dry, silicon carbide, 400, 600 and 800 grit abrasive paper, standard crocus cloth, or Mylar 3M[33,9] tape is approved for use) with widths of 13 mm and lengths of 900 mm to 1200 mm. It is necessary to wet the strip of crocus cloth or abrasive paper with build-up oil or the Mylar tape with mineral spirits.[32] Wrap the strip 1½ times around the journal to provide a minimum of 360° contact between the cloth and journal. The Mylar tape[33] will not slide over itself so only wrap it 180°. Stroke the journal with the cloth or abrasive paper by alternately pulling on the two ends of the strip while maintaining a light tension on the strip, and while traversing across the journal. Do not dwell in the center of the journal. Rotate the crankshaft 90° between each traverse. Repeat four times. If abrasive paper is used, complete the fourth and final polishing process using crocus cloth or Mylar tape.

9.4.7.4 Alternatively, rotate the crankshaft (for example, with a metal turning lathe) during the polishing process at about 120 r/min. Polishing for approximately 20 s to 30 s, while traversing the cloth across the journal, has been found to be effective for this process. Do not dwell in the center of the journal. No other method of polishing process is permitted.

9.4.7.5 Repeat the polishing procedure with dry crocus cloth or Mylar tape.

9.4.7.6 To confirm the trueness of the journal, visually check the journal with a straight edge 30.12 mm long; this length equals the width of the connecting rod bearing. Place a bright light source near the crankshaft on the side opposite your eyes. Hold the straight edge axially against the journal and inspect for light leakage between the straight edge and the journal surface, at 30° increments around the journal. If light leakage is observed, measure the journal diameters at the large and small-diameter points, determine the axial distance between the two measurement points, and calculate the taper (using half of the diametrical difference) of the journal between the points. Discard any crankshafts having a connecting rod journal taper larger than 0.013 mm per 25.4 mm. (Experience has shown that mechanical bearing wear with such crankshafts is unacceptably high.) The use of technology, such as surface profile measuring equipment is acceptable if approved by the TMC.

9.4.7.7 Resizing (refinishing) of the connecting rod journal is allowed only as stated in 6.1.3.2.

[33] Trademark of 3M.

Documents
Document Sharing Hub

Full document details: ASTM D6709-24