This international standard was developed in accordance with internationally recognized principles on standardization established in the Decision on Principles for the Development of International Standards, Guides and Recommendations issued by the World Trade Organization Technical Barriers to Trade (TBT) Committee.

Designation: D6773 – 22

# Standard Test Method for Bulk Solids Using Schulze Ring Shear Tester[1]

This standard is issued under the fixed designation D6773; the number immediately following the designation indicates the year of original adoption or, in the case of revision, the year of last revision. A number in parentheses indicates the year of last reapproval. A superscript epsilon (ε) indicates an editorial change since the last revision or reapproval.

## 1. Scope*

1.1 This test method covers the apparatus and procedures for measuring the unconfined yield strength of bulk solids during both continuous flow and after storage at rest. In addition, measurements of internal friction, bulk density, and wall friction on various wall surfaces are included.

1.2 This test method covers operation of the manually-controlled Schulze Ring Shear Tester. An automated version of this tester is also available. Its method of testing bulk solids is similar in principle to that described in this test method.

1.3 The most common use of this information is in the design of storage bins and hoppers to prevent flow stoppages due to arching and ratholing, including the slope and smoothness of hopper walls to provide mass flow. Parameters for structural design of such equipment may also be derived from this data. Another application is the measurement of the flowability of bulk solids, for example, for comparison of different products or optimization.

1.4 All observed and calculated values shall conform to the guidelines for significant digits and rounding established in Practice D6026.

1.4.1 The procedures used to specify how data are collected/recorded or calculated in this standard are regarded as the industry standard. In addition, they are representative of the significant digits that generally should be retained. The procedures used do not consider material variation, purpose for obtaining the data, special purpose studies, or any considerations for the user's objectives: and it is common practice to increase or reduce significant digits of reported data to be commensurate with these considerations. It is beyond the scope of this standard to consider significant digits used in analysis methods for engineering design.

1.5 *Units*—The values stated in SI units are to be regarded as standard. No other units of measure are included in this standard.

1.6 *This standard does not purport to address all of the safety concerns, if any, associated with its use. It is the responsibility of the user of this standard to establish appropriate safety, health, and environmental practices and determine the applicability of regulatory limitations prior to use.*

1.7 *This international standard was developed in accordance with internationally recognized principles on standardization established in the Decision on Principles for the Development of International Standards, Guides and Recommendations issued by the World Trade Organization Technical Barriers to Trade (TBT) Committee.*

## 2. Referenced Documents

2.1 *ASTM Standards:*[2]

D653 Terminology Relating to Soil, Rock, and Contained Fluids

D2216 Test Methods for Laboratory Determination of Water (Moisture) Content of Soil and Rock by Mass

D3740 Practice for Minimum Requirements for Agencies Engaged in Testing and/or Inspection of Soil and Rock as Used in Engineering Design and Construction

D4753 Guide for Evaluating, Selecting, and Specifying Balances and Standard Masses for Use in Soil, Rock, and Construction Materials Testing

D6026 Practice for Using Significant Digits and Data Records in Geotechnical Data

D6128 Test Method for Shear Testing of Bulk Solids Using the Jenike Shear Tester

E177 Practice for Use of the Terms Precision and Bias in ASTM Test Methods

E691 Practice for Conducting an Interlaboratory Study to Determine the Precision of a Test Method

## 3. Terminology

3.1 *Definitions*—For definitions of common technical terms in this standard, refer to Terminology D653.

## 4. Summary of Test Method

4.1 A representative specimen of bulk solid is placed in a shear cell of specific dimensions.

[1] This test method is under the jurisdiction of ASTM Committee D18 on Soil and Rock and is the direct responsibility of Subcommittee D18.24 on Characterization and Handling of Powders and Bulk Solids.

Current edition approved Oct. 15, 2022. Published January 2023. Originally approved in 2002. Last previous edition approved in 2016 as D6773 – 16. DOI: 10.1520/D6773-22.

[2] For referenced ASTM standards, visit the ASTM website, www.astm.org, or contact ASTM Customer Service at service@astm.org. For *Annual Book of ASTM Standards* volume information, refer to the standard's Document Summary page on the ASTM website.

*A Summary of Changes section appears at the end of this standard

Copyright © ASTM International, 100 Barr Harbor Drive, PO Box C700, West Conshohocken, PA 19428-2959. United States



Documents
Document Sharing Hub
Full document details: ASTM D6773-22

4.2 When running an instantaneous or time shear test, a normal load is applied to the cover, and the specimen is presheared until a steady state shear value has been reached. The shear stress is then immediately reduced to zero.

4.3 An instantaneous test is run by shearing the specimen under a reduced normal load until the shear force goes through a maximum value and then begins to decrease.

4.4 A time shear test is run similarly to an instantaneous shear test, except that the specimen is placed in a consolidation bench for the specified time between the preshear and shear steps.

4.5 A wall friction test is run by sliding the specimen over a coupon of wall material and measuring the frictional resistance as a function of normal, compressive load.

4.6 A wall friction time test involves sliding the specimen over the coupon of wall material, stopping and leaving the load on the specimen for a predetermined period, and then sliding it again to see if the shearing force has changed.

## 5. Significance and Use

5.1 Reliable, controlled flow of bulk solids from bins and hoppers is essential in almost every industrial facility. Unfortunately, flow stoppages due to arching and ratholing are common. Additional problems include uncontrolled flow (flooding) of powders, segregation of particle mixtures, usable capacity which is significantly less than design capacity, caking and spoilage of bulk solids in stagnant zones, and structural failures.

5.2 By measuring the flow properties of bulk solids, and designing bins and hoppers based on these flow properties, most flow problems can be prevented or eliminated **(1)**.[3]

5.3 For bulk solids with a significant percentage of particles (typically, one third or more) finer than about 6 mm (¼ in.), the unconfined yield strength is governed by the fines (–6 mm fraction). For such bulk solids, strength and wall friction tests may be performed on the fine fraction only.

NOTE 1—The quality of the result produced by this standard is dependent on the competence of personnel performing it, and the suitability of the equipment and facilities used. Agencies that meet the criteria of Practice D3740 are generally considered capable of competent and objective testing/sampling/inspection/etc. Users of this standard are cautioned that compliance with Practice D3740 does not in itself ensure reliable results. Reliable results depend on many factors; Practice D3740 provides a means of evaluating some of those factors. Practice D3740 was developed for agencies engaged in the testing or inspection (or both) of soil and rock. As such it is not totally applicable to agencies performing this standard. However, users of this standard should recognize that the framework of Practice D3740 is appropriate for evaluating the quality of an agency performing this standard. Currently there is no known qualifying national authority that inspects agencies that perform this standard.

## 6. Apparatus

6.1 The Schulze Ring Shear Tester (Figs. 1-6) is composed of a base 1 and a casing 2. The casing 2 contains the driving and measuring units and carries the working table 38.

6.2 The driving axle 5 (with detachable plastic cap 6) causes the shear cell 4 to rotate. The driver pins at the underside of the shear cell must set in the toothed wheel at the driving axle 5 to enable a close connection between shear cell and driving axle. The driving axle is driven by an electric motor and can rotate to the right or to the left. In order to shear the bulk solid specimen, the driving axle 5 along with the shear cell 4 rotate clockwise (as seen from the top). The electric motor is controlled from the front panel 35 at the front side of casing 2 (Fig. 3). The motor and drive system cause the shear cell to rotate at a speed adjustable between 0.007 and 0.13 rad/min.

6.3 The shear cell lid 7 as well as the bottom of the shear cell 4 has bent bars made of stainless steel (Fig. 4) to prevent slipping of the bulk solid at the lid or the bottom of the shear cell.

NOTE 2—The standard cell has 20 bars, each of which is 4 mm tall ($h_{Mit}$ = 4 mm, Fig. 7).

6.4 The crossbeam 8 sits on the lid 7 and is fixed with two knurled screws 9. The crossbeam 8 has several functions: In the center of the crossbeam 8 is a fixed axis 10 with a hook to append the hanger 11 (in Figs. 3 and 4 only the handle of the hanger standing out from the driving axle can be seen). Rollers at the ends of the crossbeam and the removable guide rollers 12 prevent movement of lid 7 from the centered position.

6.5 A hook 14 at the upper end of the axis 10 of the crossbeam 8 is fastened to the balance arm 15. This arm along with counterbalance 29 (Fig. 6) serves to compensate for the masses of lid 7, crossbeam 8, hanger 11, and tie rods 13. The counterbalance 29 is found at the rear side of the balance arm 15.

6.6 A digital displacement indicator 31 (Fig. 8) is used for the measurement of the height of the bulk solid specimen.

6.7 Bolts at the ends of the crossbeam 8 are used to append the tie rods 13. Therefore, a circular hole is at one end of each tie rod 13. The opposite end is provided with an elongated hole for suspending in the adjustable seating 16 attached to the load beam 17.

6.8 The rotation of the lid 7 is prevented by the tie rods 13 which transfer the tensile force to the load beams 17.

6.9 The bottom part of the hanger 11, which hangs on the crossbeam 8 and serves for exerting a normal load N on the bulk solid, is located within the base 1 (Fig. 1). The hanger has a circular plate 19 at its lower end for holding the applied mass pieces.

6.10 For control of the motor drive a front panel 35 (Fig. 3) is at the front side of the casing 2.

6.11 The load beams 17 are connected parallel. Each load beam must be capable of measuring a force up to 200 N with a precision of 0.02 % of full scale. Thus, the total measuring range, which is twice the measuring range of one load beam, is 400 N. The signal from the force transducer is conditioned by an amplifier and shown on a recorder. (**Warning—**To avoid overloading of the load beams, the indicated maximum normal load must not be exceeded.)

6.12 For the Schulze Ring Shear Tester RST-01.01 different shear cells are available. The dimensions of the standard cell

[3] The boldface numbers in parentheses refer to the list of references at the end of this standard.

AVA Documents
Document Sharing Hub



Full document details: ASTM D6773-22

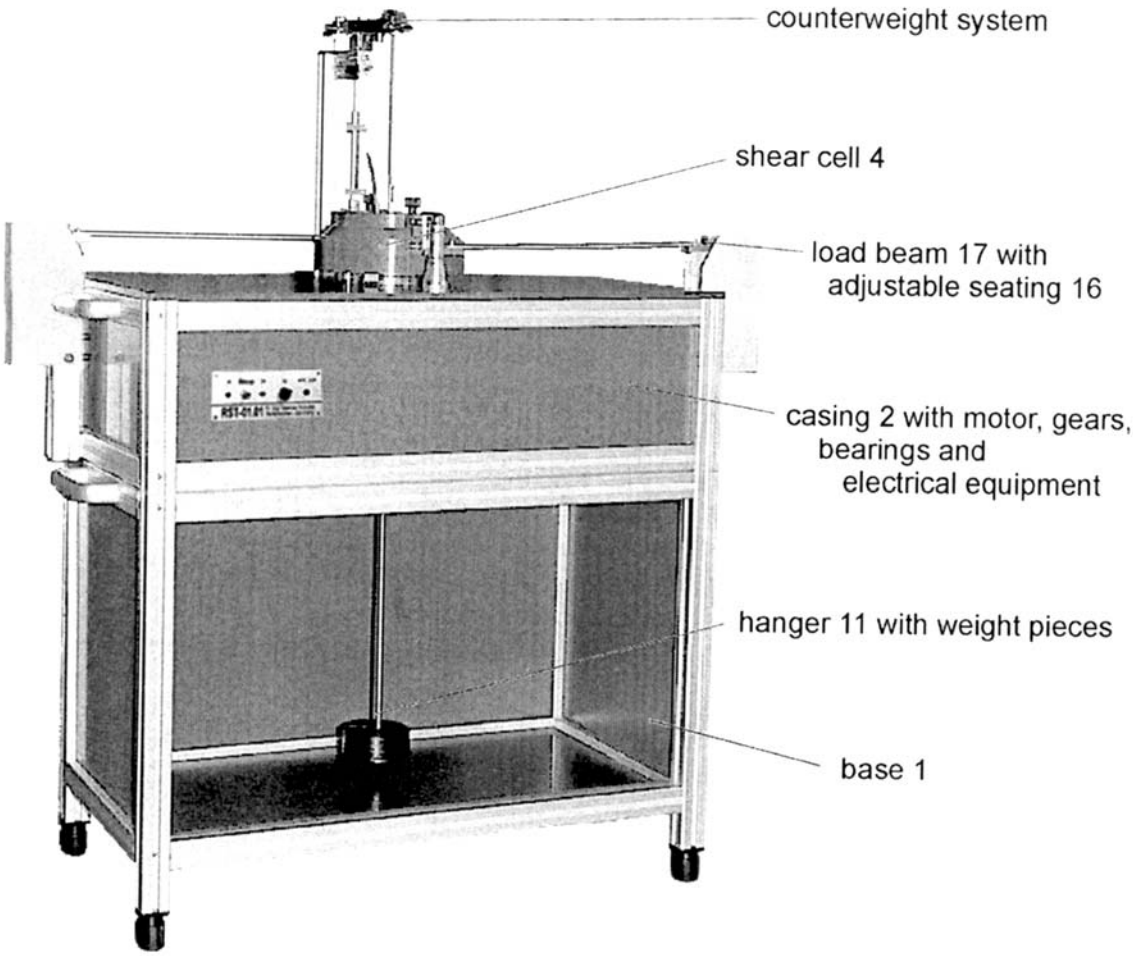


**FIG. 1 Ring Shear Tester (overall view)**

and a smaller cell can be taken from Table 2 and Fig. 7. For special purposes (for example, reduced internal volume) other dimensions are also available. The following table provides a rough indication of the applicability of various cell sizes based on maximum particle size of the bulk solid (monodisperse = narrow particle size distribution, for example, plastics pellets, grain). Values in parentheses are valid if particles are not brittle.

| Shear cell type | maximum particle size, $x_{max}$ monodisperse | broad distribution, 0 ... $x_{max}$ |
|---|---|---|
| M | 5 mm | 10 mm |
| S | 2.5 mm | 5 mm |
| MV10 | 1 (1.5) mm | 2 (3) mm |
| SV10 | 0.75 (1) mm | 1.5 (2) mm |

6.13 The time consolidation bench serves for the storage of shear cells with bulk solid specimens under load.

6.13.1 The time consolidation bench (Fig. 9) is composed of a frame Z1, on which are fastened three supporting plates Z2. One small shear cell (type S, volume approx. 200 $cm^3$) can be placed on each plate. The shape of the plate Z2 centers the shear cell.

6.13.2 Through the central depression of the time consolidation crossbeam 26 the normal load is exerted during time consolidation as shown in the left part of Fig. 9. The lower end of the loading rod Z4 is equipped with a central tip.

6.13.3 The transparent cylindrical plastic cap Z3, when pressed on plate Z2, protects the specimens from the surrounding atmosphere (for example, to reduce changes of the moisture (water) of the bulk solid specimens). This cap Z3 is joined to the loading rod Z4 through a rubber bellows Z8.

6.13.4 At the upper end of the loading rod Z4 a disk Z5 is fastened for supporting applied mass pieces by which the vertical load for time consolidation is applied.

6.13.5 The fixing screw Z6 serves for the fixation of the loading rod Z4 in the upper position (Fig. 9, on the right).

6.14 The wall friction shear cells allow the measurement of wall yield loci from which wall friction angles can be calculated.

6.14.1 The bottom ring 48 of the wall friction shear cell (see Fig. 10) contains the wall material coupon to be tested.

6.14.2 To prevent any relative circumferential displacement between the bottom ring 48 and the wall material coupon, four driving pins 50 are installed at the outer wall of the bottom ring 48. The annular wall material coupon has to be provided with notches for these driving pins so that bottom ring and wall

AVA Documents
Document Sharing Hub



Full document details: ASTM D6773-22

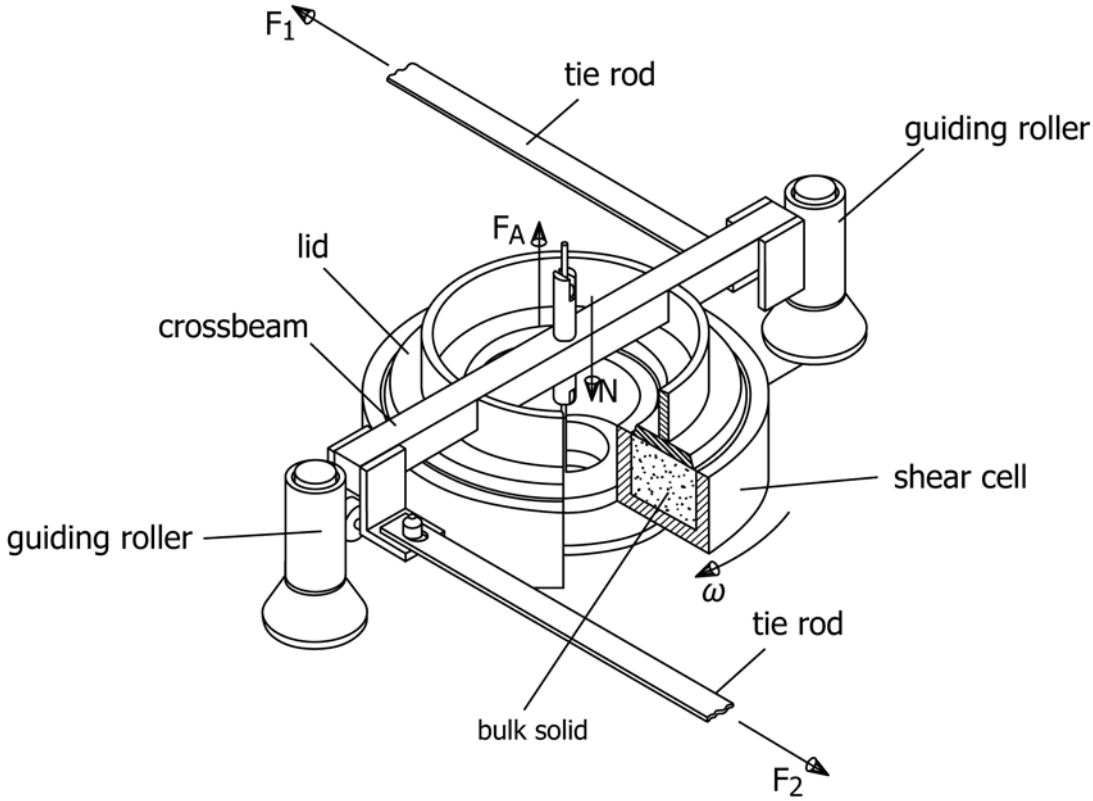


**FIG. 2 Shear Cell (in principle)**

material coupon are interlocked. The required dimensions of the wall material coupon are shown in Fig. 11.

6.14.3 The lid 49 (Fig. 12) has bent bars from stainless steel to prevent slipping of the bulk solid at the lid of the shear cell. Additionally, the lid of a wall friction shear cell is provided with downwards protruding edges at the inner and outer radius.

6.14.4 The dimensions of the wall friction shear cell are shown in Table 1 and Fig. 13.

6.15 A spatula having a rigid, sharp, straight blade at least 50 % longer than the width of the annulus of the shear cell, and at least 20 mm wide, is needed.

6.16 A laboratory balance having a maximum capacity of at least 5 kg with a precision of 0.01 % or better is required.

## 7. Specimen Preparation

7.1 The laboratory used for powder testing must be free of vibrations caused by traffic or heavy machinery. Ideally, the room is temperature and humidity controlled, or, if this is not possible, maintain it at nearly constant ambient conditions. Direct sunlight, especially on the time consolidation bench, is to be avoided.

NOTE 3—Temperature- and humidity-sensitive materials may need to be tested at different temperatures and moisture (water) contents, because this often happens in industrial environments. The laboratory environment must approximate production for meaningful testing.

7.2 *Setup:*

7.2.1 Shift the movable counterbalance 29 along the balance arm to adjust the force caused by the counterbalance mass.

NOTE 4—The fixation screw 18 (knurled screw) fixes the counterbalance 29 on the balance arm.

7.2.1.1 After unscrewing the knurled screw, which is the major part of the movable mass 30, shift the movable mass 30 along the balance arm, if necessary, for more precise adjustment of the force caused by the counterbalance mass.

NOTE 5—When the counterbalance mass is well adjusted, the lid, crossbeam, tie rods, and hanger do not press on the bulk solid; that is, the vertical stress at the surface of the bulk solid is equal to zero.

7.2.2 Adjust the seatings 16 to level the lid 7.

7.2.3 Adjust the four adjustable stands 3 on base 1 (Fig. 5) to level the Ring Shear Tester.

7.2.4 Unscrew the fixing screw sufficiently so as to be able to move the loading rod upwards or downwards. In the loading position (Fig. 9, on the left) the fixing screw must remain unscrewed.

7.2.5 Before starting with time consolidation measurements, make sure that the time consolidation bench is level. Use the four adjustable feet Z7 (Fig. 9), if necessary

7.3 *Filling the Cell* (Fig. 14)*:*

7.3.1 Fill the shear cell 4 uniformly in small horizontal layers by a spoon or spatula without applying force to the surface of the material until the cell is slightly overfilled with material. Fill the cell in such a way as to make sure that there are no voids within it.

7.3.2 Remove excess material in small quantities by scraping off with a blade 1 until flush with the top of the annulus. At first, scrape the blade counterclockwise across the ring one or two times in a zigzag motion. Then, scrape the blade around the annulus counterclockwise, as shown in Fig. 14a completely

AVA Documents
Document Sharing Hub



Full document details: ASTM D6773-22

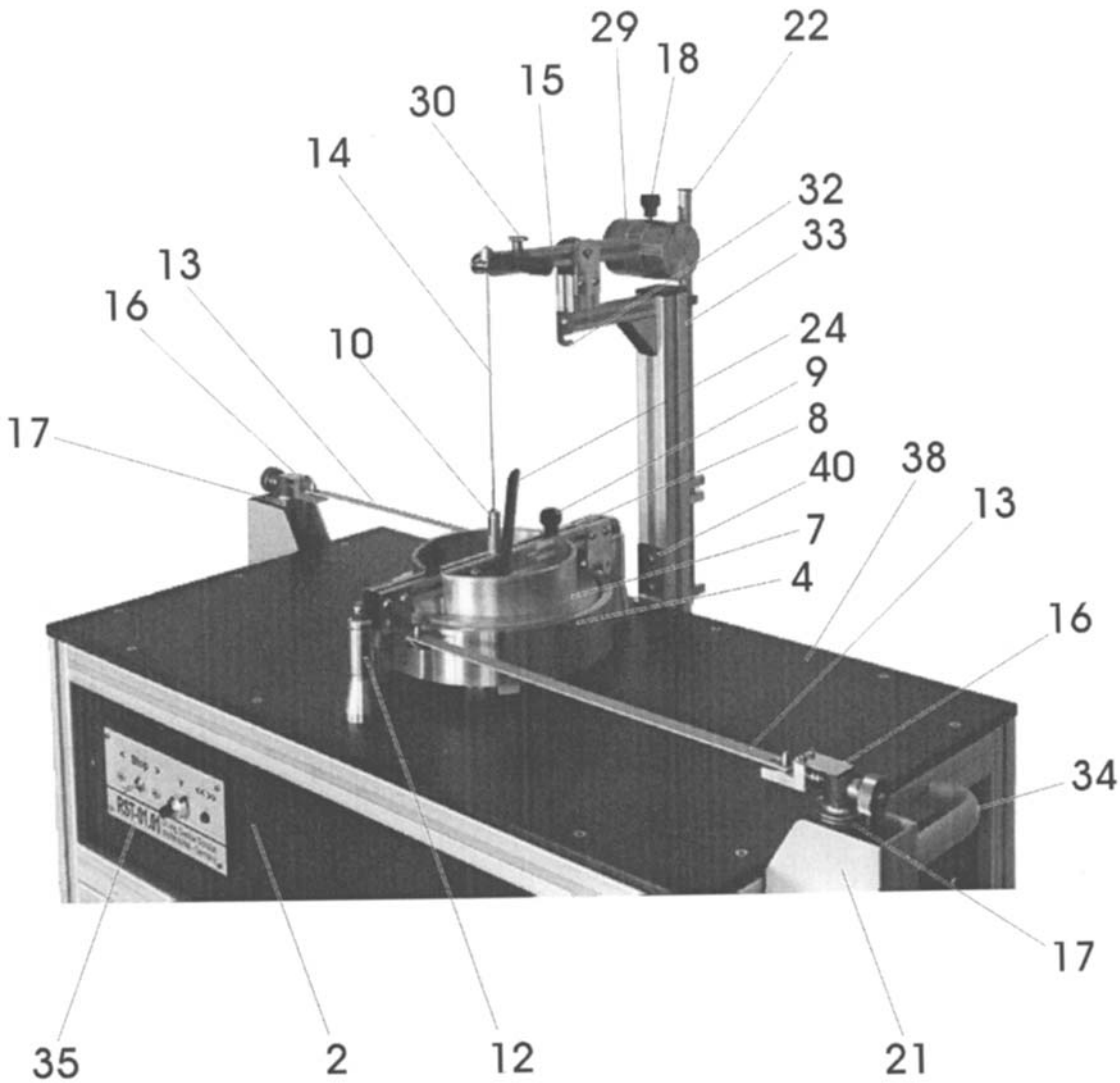


**FIG. 3 Ring Shear Tester (upper part)**

the blade is inclined by an angle $\alpha = 15$ to 30° to the radial direction. Hold the blade vertically or tilted by a few degrees to the vertical (angle $\beta = 0°$ to 10°) as shown in Fig. 14b. Do not exert a downward force on the material with the blade.

7.3.3 If coarse particles are present, scraping may tear them from the surface and alter the structure. In such cases it is better to attempt to fill the cell so that the material surface is flush with the annulus after filling.

7.3.4 If necessary, clean the outside of the shear cell. Then determine the mass of the shear cell with contents. Note the total mass $m_{tot}$.

7.4 *Wall Friction:*

7.4.1 When measuring the friction between the particulate solid and a coupon of silo wall material in a wall friction test, add spacers and a coupon of wall material to the shear cell bottom ring. Shear the specimen contained in bottom ring over the wall material coupon under different wall normal stresses $\sigma_w$ and measure the resulting wall shear stresses $\tau_w$.

7.4.2 *Selection of Wall Friction Normal Stress Levels:*

7.4.2.1 Select six wall friction normal stress levels $\sigma_{w1}$ to $\sigma_{w6}$ where $\sigma_{w1}$ is the smallest normal stress. The largest normal stress $\sigma_{w6}$ must be approximately equal to the major principal stress $\sigma_{1,2}$ of the second preshear normal stress, $\sigma_{p,2}$. The

AVA Documents
Document Sharing Hub



Full document details: ASTM D6773-22

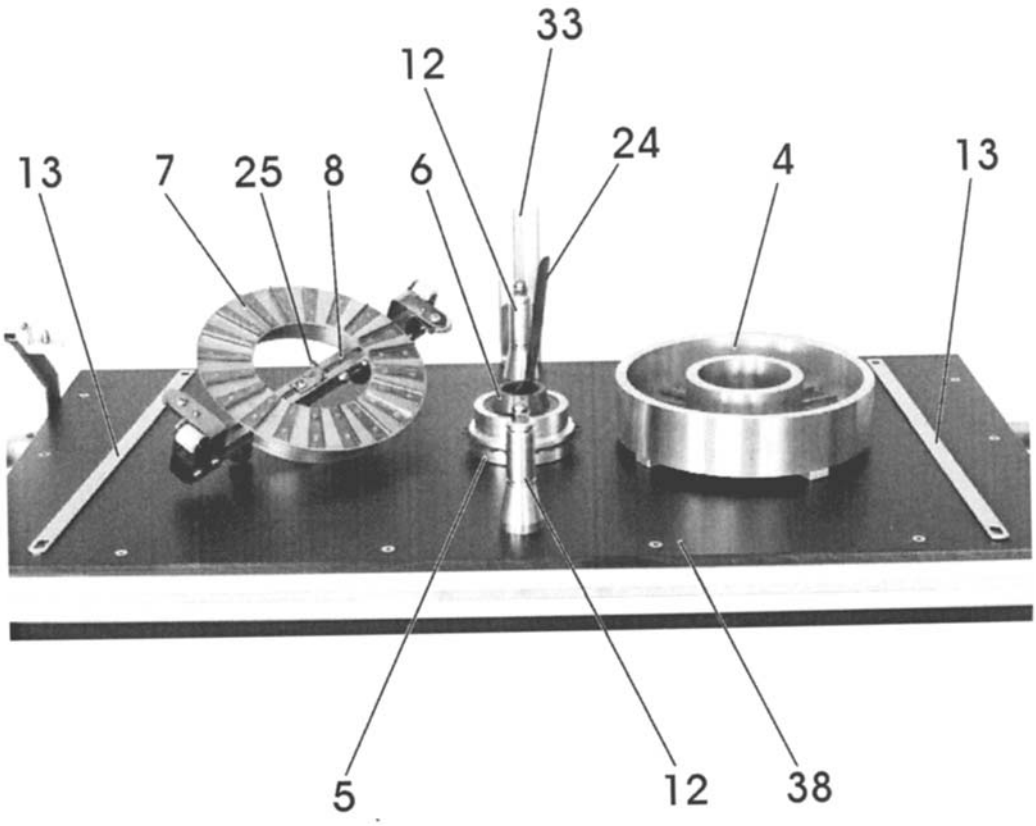


**FIG. 4 Upper Part of the Ring Shear Tester, Shear Cell Removed**

smallest normal stress $\sigma_{w1}$ will normally include the hanger without applied masses.

7.4.3 *Wall Coupon and Material Specimen Preparation:*

7.4.3.1 Wash the wall material coupon and dry thoroughly before the test. Do not touch the surface after washing with bare hands.

7.4.3.2 Insert the spacer rings 51 and the wall material coupon in the bottom ring 48 (Fig. 10). The distance between upper edge of the bottom ring 48 and upper surface of the wall material coupon must total about 8 to 10 mm.

NOTE 6—The thickness of each spacer ring is 2 mm.

7.4.3.3 Determine the mass of the bottom ring 48 with content (note total mass $m_{wall}$).

7.4.3.4 Connect crossbeam 8 and lid 49 using the knurled screws 9.

7.4.3.5 Fill the bottom ring 48 with the bulk solid to be tested. See 7.3.

7.4.3.6 If necessary, clean the bottom ring 48 from outside. Then determine the mass of the bottom ring 48 with content (note total mass $m_{W,tot}$).

7.4.3.7 Ascertain that the power supply is switched on.

7.4.3.8 Put the filled bottom ring 48 on driving axle 5 (in analogy to Fig. 15). The driver pins at the underside of the shear cell must engage in the toothed wheel at the driving axle 5.

7.4.3.9 Carefully place the lid 49 concentrically on the bottom ring 48 on the bulk solid specimen. The lid 49 must be in a position turned a few degrees counterclockwise to its shear position (shear position: longitudinal axis of the crossbeam 8 is perpendicular to the front edge of the casing 2). Direct the open side of the hook 25 in the center of the crossbeam 8 to the right. Locate handle 24 of the hanger 11 on the right side of crossbeam 8 (in analogy to Fig. 16).

7.4.3.10 Put the tie rods 13 on both the bolts at the ends of crossbeam 8 (circular holes of tie rods 13) and the seatings 16 at the load beams 17 (long hole of the tie rod 13).

*(1)* Ensure that the tie rods 13 have some clearance in the seatings 16; that is, the tie rods must not be stressed at that stage. Important: If it is not possible to connect the tie rods as described above, do not move the lid manually! This would influence the test result. Only use the motor drive to turn the shear cell with the lid in a position where it is possible to connect the tie rods to the load beams.

7.4.3.11 Append hanger 11 at hook 25 on the lower side of crossbeam 8.

7.4.3.12 Carefully put appropriate applied mass pieces on the circular plate 19 of the hanger.

NOTE 7—The total mass of the applied mass pieces on the hanger must be less than or equal to the maximum normal load to be used for the wall friction measurement.

7.4.3.13 Remove hook 14, which is connected to the balance arm, from its off-position mounting 32 and append it to the central axis 10 (in analogy to Fig. 16). To do this, the front

Documents
Document Sharing Hub



Full document details: ASTM D6773-22

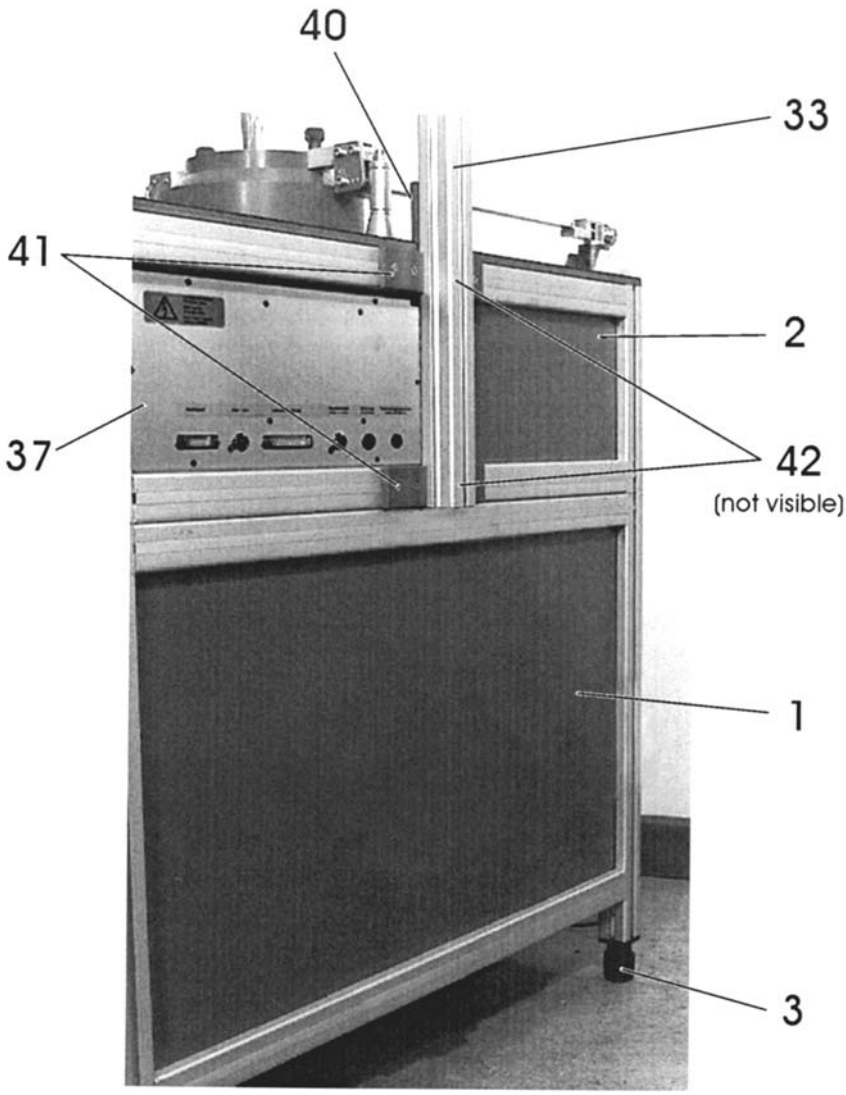


**FIG. 5 View on the Reverse Side of the Ring Shear Tester**

end of the balance arm must be pulled down at the black handle 46 provided for this (the handle is not shown in all figures; see Fig. 6).

*(1)* If the lid sinks down very much, the lower edge of the lid may touch directly the upper surface of the wall material coupon, thus causing incorrect measurement results. If this happens, remove the shear cell from the tester, remove the lid from the bottom ring, and add additional bulk solid into the bottom ring following procedure starting at 7.4.3.5.

7.4.3.14 Check the adjustment of the rotational velocity (front panel 35). The circumferential velocity at the mean specimen diameter must be 1 to 2 mm/min.

## 8. Procedure

8.1 *Procedure for Instantaneous Shear Test*

8.1.1 *Preshear:*

8.1.1.1 Ascertain that the power supply has been turned on at least 15 min to ensure that the unit is properly warmed up.

8.1.1.2 Put the filled shear cell 4 on the driving axle 5 (Fig. 15). Make sure that the driver pins on the underside of the shear cell engage the toothed wheel of the driving axle 5.

8.1.1.3 Select the first preshear normal stress $\sigma_{p,1}$ on the basis of the bulk density of the test material, in accordance with the following table:

| $\rho_b$ (kg/m $^3$) | $\sigma_{p,1}$ (kPa) |
|---|---|
| < 300 | approximately 1.5 |
| 300 to 800 | approximately 2.0 |
| 800 to 1600 | approximately 2.5 |
| 1600 to 2400 | approximately 3.0 |
| > 2400 | approximately 4.0 |

8.1.1.4 Follow 8.1.1.5 – 8.1.1.10 only if the normal load at preshear is greater than 15 *N*. Otherwise go to 8.1.1.12.

NOTE 8—The latter procedure is necessary so as to not over-consolidate a bulk solid specimen at small normal loads.

8.1.1.5 Connect crossbeam 8 and lid 7 using the knurled screws 9. Fasten screws only very slightly. Position the lid

AVA Documents
Document Sharing Hub



Full document details: ASTM D6773-22

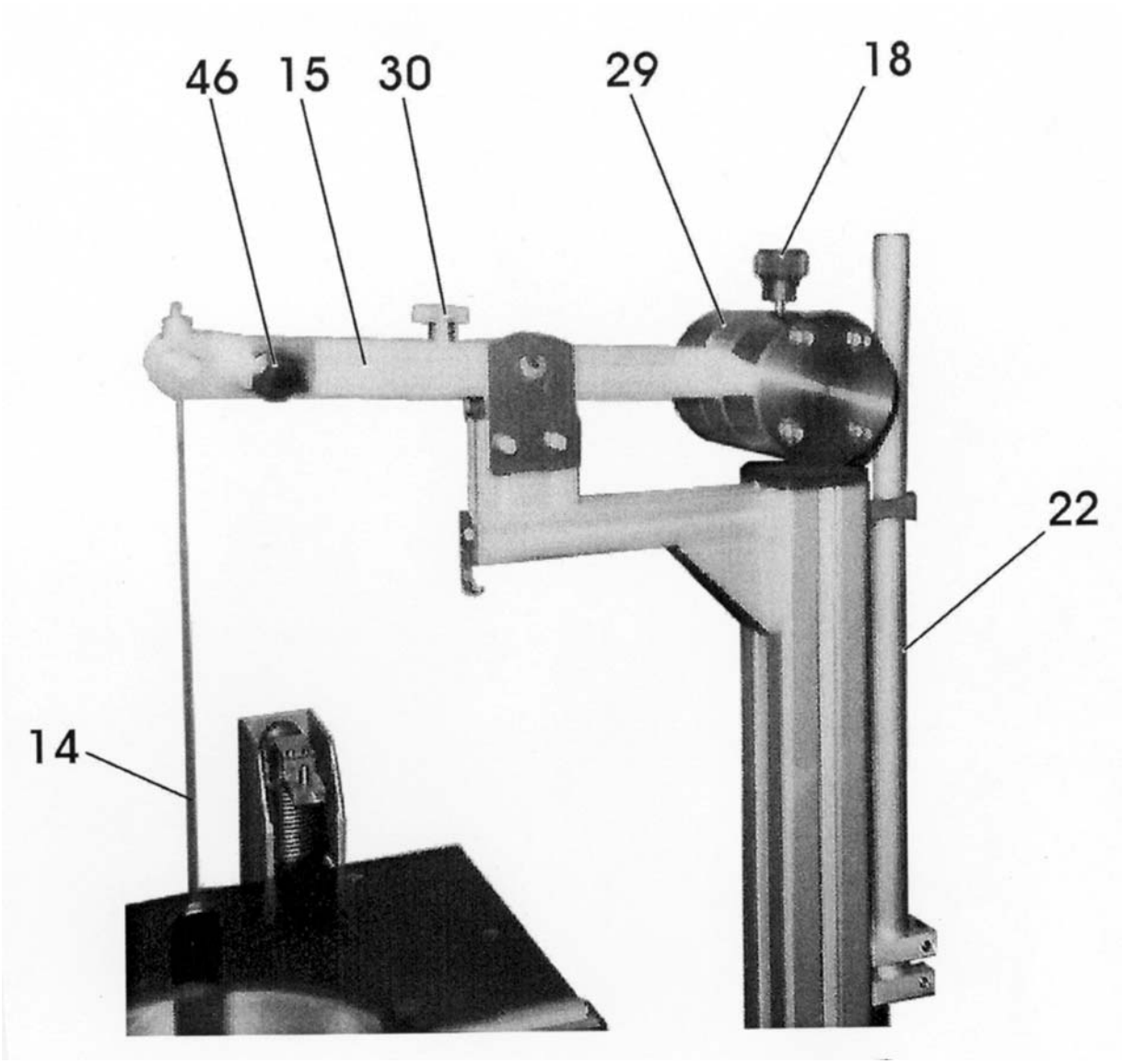


**FIG. 6 Counterbalance System**

**TABLE 1 Wall Friction Shear Cell Dimensions**

| | Standard Wall Friction Shear Cell, Type WM |
|---|---|
| Cross-section (lid) $A_D$ | 226 $cm^2$ |
| $r_{iD}$ | 51 mm |
| $r_{aD}$ | 99 mm |
| $r_{iSZ}$ | 42.5 mm |
| $r_{aSZ}$ | 107.5 mm |
| $h_{SZ}$ | 24 mm |
| $h_{Mit}$ | 4 mm |
| Material | Aluminum |

concentrically on the shear cell and turned a few degrees counterclockwise to its shear position (shear position: longitudinal axis of the crossbeam is perpendicular to the front edge of the casing 2). Direct the open side of hook 25 in the center of crossbeam 8 to the right. Locate handle 24 of hanger 11 on the right side of crossbeam 8 (Fig. 16).

8.1.1.6 Put tie rods 13 on both the bolts at the ends of crossbeam 8 (circular holes of tie rods 13) and seatings 16 at load beams 17 (long hole of the tie rod 13).

8.1.1.7 Ensure that the tie rods 13 have some clearance in the seatings 16; that is, the tie rods must not be stressed at this stage. If it is not possible to connect the tie rods as described above, do not move the lid manually since this would influence the test result. Only use the motor drive to turn the shear cell with the lid in a position where it is possible to connect the tie rods to the load beams.

8.1.1.8 Append hanger 11 at hook 25 at the lower side of crossbeam 8.

8.1.1.9 Carefully put an applied mass piece on the circular plate 19 of hanger 11 (mass needed for preshear or smaller mass).

8.1.1.10 Remove hook 14, which is connected to the balance arm, from its off-position mounting 32 and append it to the central axis 10 (this already has been done in Fig. 6) to

AVA Documents
Document Sharing Hub



Full document details: ASTM D6773-22

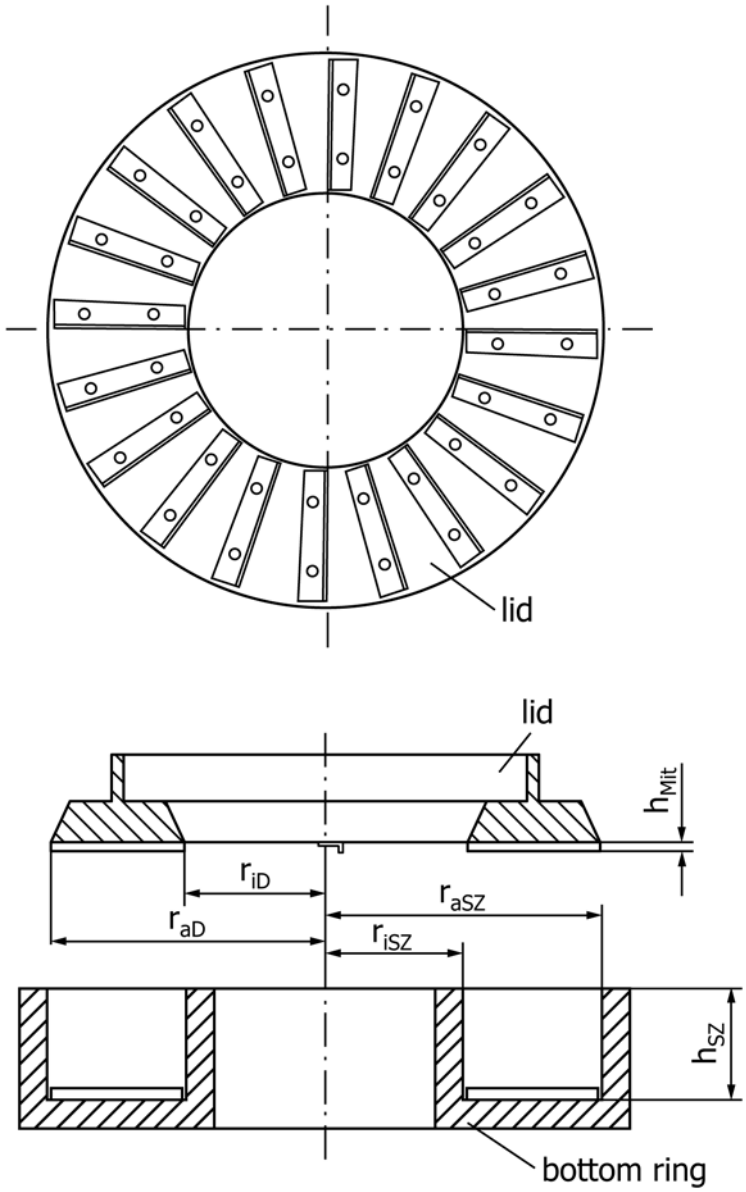


**FIG. 7 Main Dimensions of Shear Cell**

do this, pull down the front end of the balance arm at the black handle 46 provided for this (the handle is not shown in all figures; see Fig. 6).

8.1.1.11 Follow 8.1.1.12 – 8.1.1.16 if the normal load at preshear is less than 15 *N*. (These steps can also be used alternatively to 8.1.1.5 – 8.1.1.10.)

8.1.1.12 Connect crossbeam 8 and lid 7 using the knurled screws 9. Fasten screws only very slightly. Remove hook 14, which is connected to the balance arm, from its off-position at mounting 32 and append it to the central axis 10. The lid is then in a "lifted position."

8.1.1.13 Put at least one applied mass piece on the circular plate 19 of the hanger 11.

NOTE 9—The mass on the hanger can be less than or equal to that needed for preshear, but must not exceed 1 kg.

8.1.1.14 Hold the lid in its lifted position with one hand and append hanger 11 at hook 25 at the lower side of crossbeam 8.

8.1.1.15 Carefully place the lid concentrically on the shear cell on the bulk solid specimen. The lid must be in a position turned a few degrees counterclockwise to its shear position (shear position: longitudinal axis of the crossbeam is perpendicular to the front edge of the casing 2). Direct the open side of hook 25 in the center of crossbeam 8 to the right. Locate handle 24 of hanger 11 on the right side of crossbeam 8 (Fig. 16).

8.1.1.16 Put tie rods 13 on both the bolts at the ends of crossbeam 8 (circular holes of tie rods 13) and the seatings 16 at load beams 17 (long hole of the tie rod 13). Ensure that the tie rods 13 have some clearance in the seatings 16; that is, the tie rods must not be stressed at this stage. If it is not possible

AVA Documents
Document Sharing Hub



Full document details: ASTM D6773-22