This international standard was developed in accordance with internationally recognized principles on standardization established in the Decision on Principles for the Development of International Standards, Guides and Recommendations issued by the World Trade Organization Technical Barriers to Trade (TBT) Committee.

Designation: D7137/D7137M – 23

Standard Test Method for Compressive Residual Strength Properties of Damaged Polymer Matrix Composite Plates[1]

This standard is issued under the fixed designation D7137/D7137M; the number immediately following the designation indicates the year of original adoption or, in the case of revision, the year of last revision. A number in parentheses indicates the year of last reapproval. A superscript epsilon (ε) indicates an editorial change since the last revision or reapproval.

1. Scope

1.1 This test method covers compression residual strength properties of multidirectional polymer matrix composite laminated plates, which have been subjected to quasi-static indentation per Test Method D6264/D6264M or drop-weight impact per Test Method D7136/D7136M prior to application of compressive force. The composite material forms are limited to continuous-fiber reinforced polymer matrix composites with multidirectional fiber orientations, and which are both symmetric and balanced with respect to the test direction. The range of acceptable test laminates and thicknesses is defined in 8.2.

NOTE 1—When used to determine the residual strength of drop-weight impacted plates, this test method is commonly referred to as the Compression After Impact, or CAI, method.

1.2 The method utilizes a flat, rectangular composite plate, previously subjected to a damaging event, which is tested under compressive loading using a stabilization fixture.

NOTE 2—The damage tolerance properties obtained are particular to the type, geometry and location of damage inflicted upon the plate.

1.3 The properties generated by this test method are highly dependent upon several factors, which include specimen geometry, layup, damage type, damage size, damage location, and boundary conditions. Thus, results are generally not scalable to other configurations, and are particular to the combination of geometric and physical conditions tested.

1.4 This test method can be used to test undamaged polymer matrix composite plates, but historically such tests have demonstrated a relatively high incidence of undesirable failure modes (such as end crushing). Test Method D6641/D6641M is recommended for obtaining compressive properties of undamaged polymer matrix composites.

1.5 *Units*—The values stated in either SI units or inch-pound units are to be regarded separately as standard. The values stated in each system are not necessarily exact equivalents; therefore, to ensure conformance with the standard, each system shall be used independently of the other, and values from the two systems shall not be combined.

1.5.1 Within the text the inch-pound units are shown in brackets.

1.6 *This standard does not purport to address all of the safety concerns, if any, associated with its use. It is the responsibility of the user of this standard to establish appropriate safety, health, and environmental practices and determine the applicability of regulatory limitations prior to use.*

1.7 *This international standard was developed in accordance with internationally recognized principles on standardization established in the Decision on Principles for the Development of International Standards, Guides and Recommendations issued by the World Trade Organization Technical Barriers to Trade (TBT) Committee.*

2. Referenced Documents

2.1 *ASTM Standards:*[2]

D792 Test Methods for Density and Specific Gravity (Relative Density) of Plastics by Displacement

D883 Terminology Relating to Plastics

D3171 Test Methods for Constituent Content of Composite Materials

D3878 Terminology for Composite Materials

D5229/D5229M Test Method for Moisture Absorption Properties and Equilibrium Conditioning of Polymer Matrix Composite Materials

D5687/D5687M Guide for Preparation of Flat Composite Panels with Processing Guidelines for Specimen Preparation

D6264/D6264M Test Method for Measuring the Damage Resistance of a Fiber-Reinforced Polymer-Matrix Composite to a Concentrated Quasi-Static Indentation Force

D6641/D6641M Test Method for Compressive Properties of Polymer Matrix Composite Materials Using a Combined Loading Compression (CLC) Test Fixture

D7136/D7136M Test Method for Measuring the Damage

[1] This test method is under the jurisdiction of ASTM Committee D30 on Composite Materials and is the direct responsibility of Subcommittee D30.05 on Structural Test Methods.

Current edition approved May 1, 2023. Published June 2023. Originally approved in 2005. Last previous edition approved in 2017 as D7137/D7137M – 17. DOI: 10.1520/D7137_D7137M-23.

[2] For referenced ASTM standards, visit the ASTM website, www.astm.org, or contact ASTM Customer Service at service@astm.org. For *Annual Book of ASTM Standards* volume information, refer to the standard's Document Summary page on the ASTM website.

Copyright © ASTM International, 100 Barr Harbor Drive, PO Box C700, West Conshohocken, PA 19428-2959. United States

Documents
Document Sharing Hub
Full document details: ASTM D7137/D7137M-23

Resistance of a Fiber-Reinforced Polymer Matrix Composite to a Drop-Weight Impact Event
E4 Practices for Force Calibration and Verification of Testing Machines
E6 Terminology Relating to Methods of Mechanical Testing
E122 Practice for Calculating Sample Size to Estimate, With Specified Precision, the Average for a Characteristic of a Lot or Process
E177 Practice for Use of the Terms Precision and Bias in ASTM Test Methods
E456 Terminology Relating to Quality and Statistics

2.2 *Military Standards:*

NASA Reference Publication 1092 Standard Tests for Toughened Resin Composites, Revised Edition, July 1983[3]

3. Terminology

3.1 *Definitions*—Terminology D3878 defines terms relating to composite materials. Terminology D883 defines terms relating to plastics. Terminology E6 defines terms relating to mechanical testing. Terminology E456 and Practice E177 define terms relating to statistics. In the event of a conflict between terms, Terminology D3878 shall have precedence over the other standards.

3.2 *Definitions of Terms Specific to This Standard:*

3.2.1 If the term represents a physical quantity, its analytical dimensions are stated immediately following the term (or letter symbol) in fundamental dimension form, using the following ASTM standard symbology for fundamental dimensions, shown within square brackets: [*M*] for mass, [*L*] for length, [*T*] for time, [θ] for thermodynamic temperature, and [*nd*] for non-dimensional quantities. Use of these symbols is restricted to analytical dimensions when used with square brackets, as the symbols may have other definitions when used without the brackets.

3.2.2 *nominal value, n*—a value, existing in name only, assigned to a measurable property for the purpose of convenient designation. Tolerances may be applied to a nominal value to define an acceptable range for the property.

3.3 *Symbols:*

3.3.1 A—cross-sectional area of a specimen

3.3.2 CV—coefficient of variation statistic of a sample population for a given property (in percent)

3.3.3 D—damage diameter

3.3.4 E^{CAI}—effective compressive modulus in the test direction

3.3.5 F^{CAI}—ultimate compressive residual strength in the test direction

3.3.6 h—specimen thickness

3.3.7 l—specimen length

3.3.8 n—number of specimens per sample population

3.3.9 N—number of plies in laminate under test

3.3.10 P_{max}—maximum force carried by test specimen prior to failure

3.3.11 S_{n-1}—standard deviation statistic of a sample population for a given property

3.3.12 w—specimen width

3.3.13 x_i—test result for an individual specimen from the sample population for a given property

3.3.14 $\bar{x}$—mean or average (estimate of mean) of a sample population for a given property

4. Summary of Test Method

4.1 A uniaxial compression test is performed using a balanced, symmetric laminated plate, which has been damaged and inspected prior to the application of compressive force. The damage state is imparted through out-of-plane loading caused by quasi-static indentation or drop-weight impact.

[3] Available from National Aeronautics and Space Administration (NASA)-Langley Research Center, Hampton, VA 23681-2199.

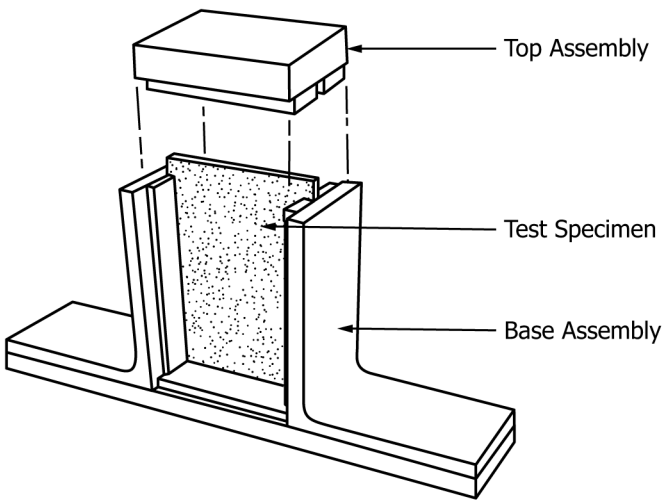

FIG. 1 Schematic of Compressive Residual Strength Support Fixture with Specimen in Place

AVA Documents
Document Sharing Hub

Full document details: ASTM D7137/D7137M-23

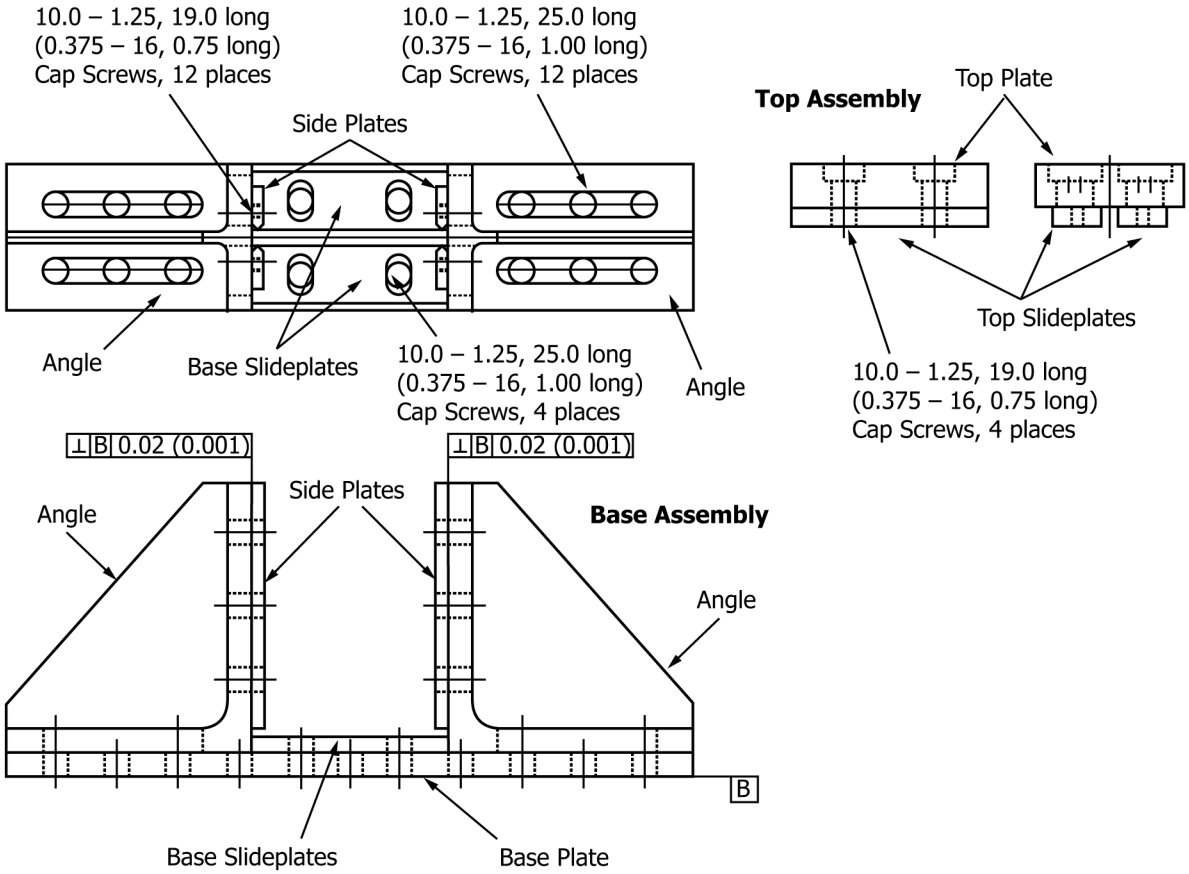

Notes
1) All dimensions in millimeters (inches) unless otherwise specified.
2) Dimensional tolerances are linear ± 0.5 mm (± 0.02 in.), angular ± 0.5 degrees.
3) Break all edges.
4) Gussets on angles are optional but recommended.

FIG. 2 Support Fixture Assembly

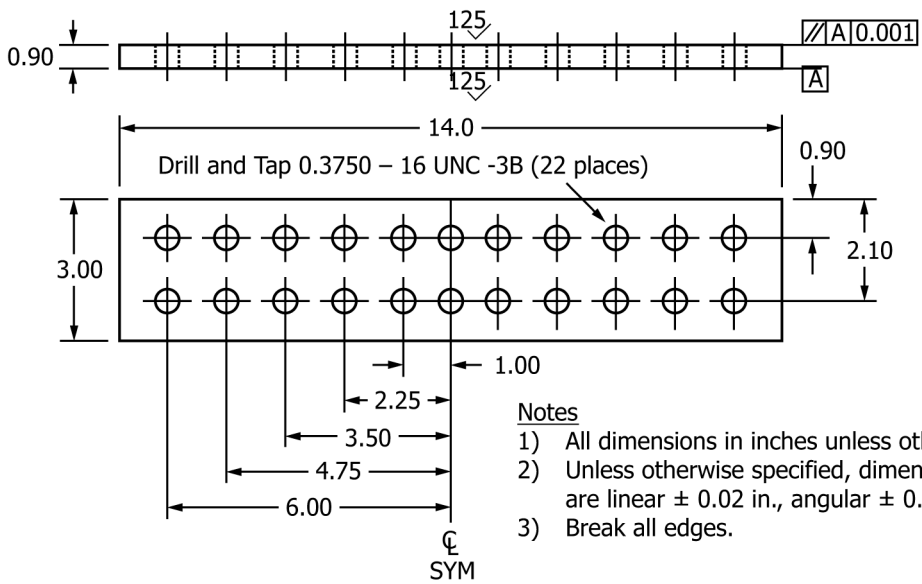

Notes
1) All dimensions in inches unless otherwise specified.
2) Unless otherwise specified, dimensional tolerances are linear ± 0.02 in., angular ± 0.5 degrees.
3) Break all edges.

FIG. 3 Support Fixture Base Plate (Inch-Pound Version)

Documents
Document Sharing Hub

Full document details: ASTM D7137/D7137M-23

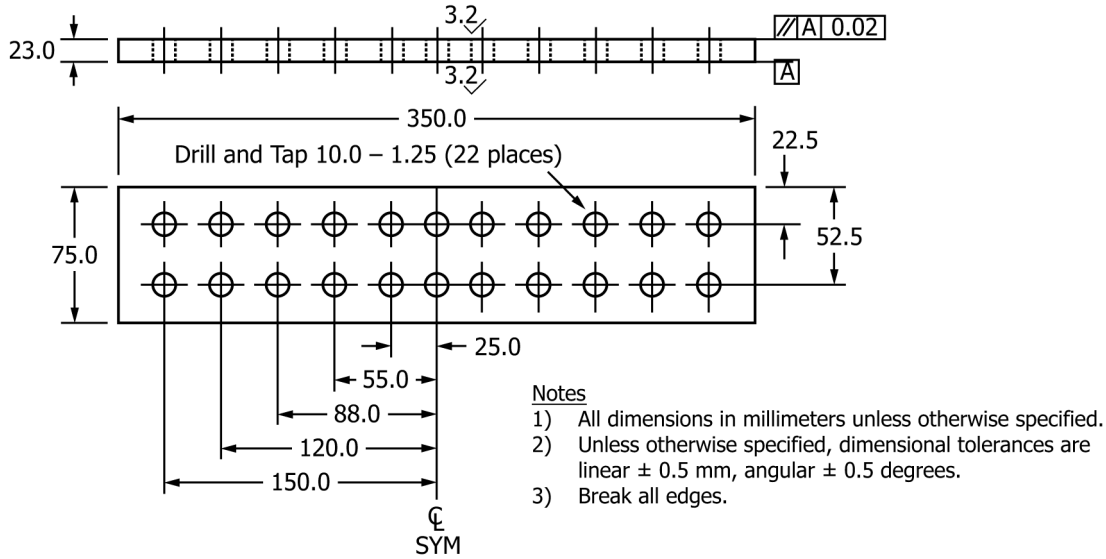

FIG. 4 Support Fixture Base Plate (SI Version)

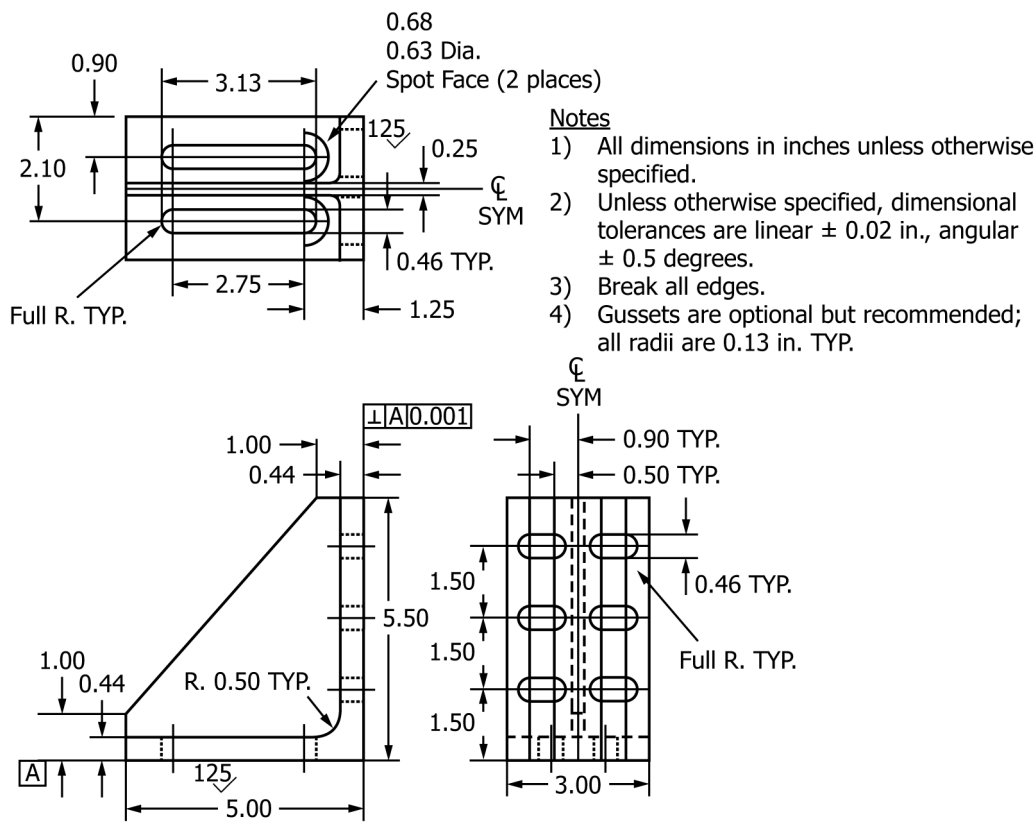

FIG. 5 Support Fixture Angles (Inch-Pound Version)

4.1.1 *Quasi-Static Indentation*—The rectangular plate is damaged due to application of an out-of-plane static indentation force in accordance with Test Method D6264/D6264M.

4.1.2 *Drop-Weight Impact*—The rectangular plate is damaged due to application of an out-of-plane drop-weight impact in accordance with Test Method D7136/D7136M.

4.2 The damaged plate is installed in a multi-piece support fixture, that has been aligned to minimize loading eccentricities and induced specimen bending. The specimen/fixture assembly is placed between flat platens and end-loaded under compressive force until failure. Applied force, crosshead displacement, and strain data are recorded while loading.

4.3 Preferred failure modes pass through the damage in the test specimen. However, acceptable failures may initiate away from the damage site, in instances when the damage produces a relatively low stress concentration or if the extent of damage

AVA Documents
Document Sharing Hub

Full document details: ASTM D7137/D7137M-23

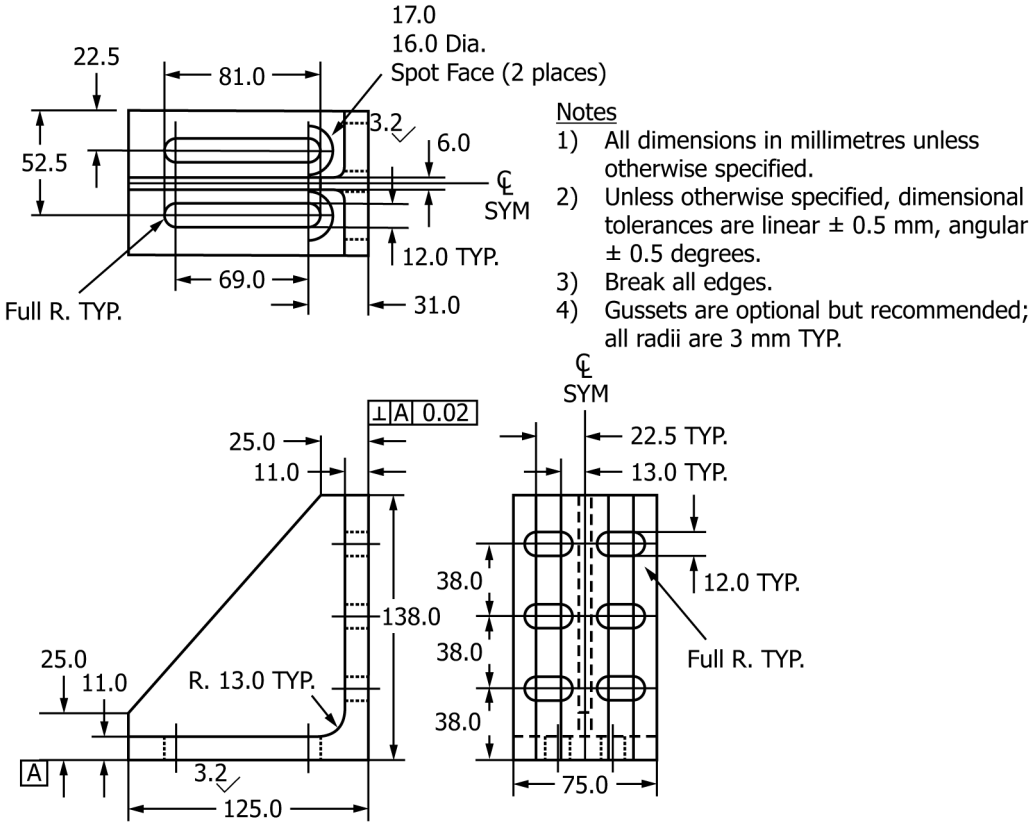

FIG. 6 Support Fixture Angles (SI Version)

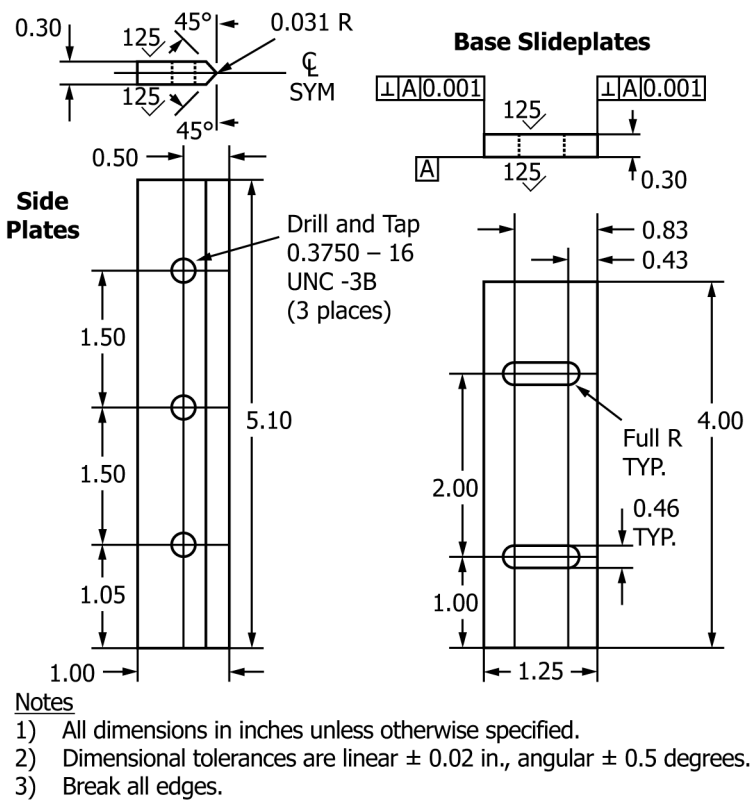

FIG. 7 Support Fixture Side Plates and Base Slideplates (Inch-Pound Version)

is small, or both. Unacceptable failure modes are those related to load introduction by the support fixture, such as support

AVA Documents
Document Sharing Hub

Full document details: ASTM D7137/D7137M-23