This international standard was developed in accordance with internationally recognized principles on standardization established in the Decision on Principles for the Development of International Standards, Guides and Recommendations issued by the World Trade Organization Technical Barriers to Trade (TBT) Committee.

Designation: D7156 – 24

Standard Test Method for Evaluation of Diesel Engine Oils in the T-11 Exhaust Gas Recirculation Diesel Engine[1]

This standard is issued under the fixed designation D7156; the number immediately following the designation indicates the year of original adoption or, in the case of revision, the year of last revision. A number in parentheses indicates the year of last reapproval. A superscript epsilon (ε) indicates an editorial change since the last revision or reapproval.

1. Scope*

1.1 This test method covers an engine test procedure for evaluating diesel engine oils for performance characteristics in a diesel engine equipped with exhaust gas recirculation, including viscosity increase and soot concentrations (loading).[2] This test method is commonly referred to as the Mack T-11.

1.1.1 This test method also provides the procedure for running an abbreviated length test, which is commonly referred to as the T-11A. The procedures for the T-11A are identical to the T-11 with the exception of the items specifically listed in Annex A7. Additionally, the procedure modifications listed in Annex A7 refer to the corresponding section of the T-11 procedure.

1.2 The values stated in SI units are to be regarded as standard. No other units of measurement are included in this standard.

1.2.1 *Exceptions*—Where there is no direct SI equivalent such as screw threads, National Pipe Threads/diameters, tubing size, or where there is a sole source supply equipment specification.

1.3 *This standard does not purport to address all of the safety concerns, if any, associated with its use. It is the responsibility of the user of this standard to establish appropriate safety, health, and environmental practices and determine the applicability of regulatory limitations prior to use.* See Annex A6 for specific safety hazards.

1.4 *This international standard was developed in accordance with internationally recognized principles on standardization established in the Decision on Principles for the Development of International Standards, Guides and Recommendations issued by the World Trade Organization Technical Barriers to Trade (TBT) Committee.*

2. Referenced Documents

2.1 *ASTM Standards:*[3]

D86 Test Method for Distillation of Petroleum Products and Liquid Fuels at Atmospheric Pressure

D93 Test Methods for Flash Point by Pensky-Martens Closed Cup Tester

D97 Test Method for Pour Point of Petroleum Products

D130 Test Method for Corrosiveness to Copper from Petroleum Products by Copper Strip Test

D235 Specification for Mineral Spirits (Petroleum Spirits) (Hydrocarbon Dry Cleaning Solvent)

D287 Test Method for API Gravity of Crude Petroleum and Petroleum Products (Hydrometer/Method)

D445 Test Method for Kinematic Viscosity of Transparent and Opaque Liquids (and Calculation of Dynamic Viscosity)

D482 Test Method for Ash from Petroleum Products

D524 Test Method for Ramsbottom Carbon Residue of Petroleum Products

D613 Test Method for Cetane Number of Diesel Fuel Oil

D664 Test Method for Acid Number of Petroleum Products by Potentiometric Titration

D976 Test Method for Calculated Cetane Index of Distillate Fuels

D1319 Test Method for Hydrocarbon Types in Liquid Petroleum Products by Fluorescent Indicator Adsorption

D2274 Test Method for Oxidation Stability of Distillate Fuel Oil (Accelerated Method)

D2500 Test Method for Cloud Point of Petroleum Products and Liquid Fuels

D2622 Test Method for Sulfur in Petroleum Products by Wavelength Dispersive X-ray Fluorescence Spectrometry

D2709 Test Method for Water and Sediment in Middle Distillate Fuels by Centrifuge

D3524 Test Method for Diesel Fuel Diluent in Used Diesel Engine Oils by Gas Chromatography

D4052 Test Method for Density, Relative Density, and API

[1] This test method is under the jurisdiction of ASTM Committee D02 on Petroleum Products, Liquid Fuels, and Lubricants and is the direct responsibility of Subcommittee D02.B0 on Automotive Lubricants.

Current edition approved March 1, 2024. Published March 2024. Originally approved in 2005. Last previous edition approved in 2019 as D7156 – 19. DOI: 10.1520/D7156-24.

[2] Until the next revision of this test method, the ASTM Test Monitoring Center will update changes in this test method by means of Information Letters. Information Letters may be obtained from the ASTM Test Monitoring Center, 203 Armstrong Drive, Freeport, PA 16229, Attention: Director, www.astmtmc.org. This edition incorporates revisions in all Information Letters through No. 23-1.

[3] For referenced ASTM standards, visit the ASTM website, www.astm.org, or contact ASTM Customer Service at service@astm.org. For *Annual Book of ASTM Standards* volume information, refer to the standard's Document Summary page on the ASTM website.

*A Summary of Changes section appears at the end of this standard

Copyright © ASTM International, 100 Barr Harbor Drive, PO Box C700, West Conshohocken, PA 19428-2959. United States

Documents
Document Sharing Hub
Full document details: ASTM D7156-24

Gravity of Liquids by Digital Density Meter
D4175 Terminology Relating to Petroleum Products, Liquid Fuels, and Lubricants
D4294 Test Method for Sulfur in Petroleum and Petroleum Products by Energy Dispersive X-ray Fluorescence Spectrometry
D4485 Specification for Performance of Active API Service Category Engine Oils
D4737 Test Method for Calculated Cetane Index by Four Variable Equation
D4739 Test Method for Base Number Determination by Potentiometric Hydrochloric Acid Titration
D5185 Test Method for Multielement Determination of Used and Unused Lubricating Oils and Base Oils by Inductively Coupled Plasma Atomic Emission Spectrometry (ICP-AES)
D5453 Test Method for Determination of Total Sulfur in Light Hydrocarbons, Spark Ignition Engine Fuel, Diesel Engine Fuel, and Engine Oil by Ultraviolet Fluorescence
D5967 Test Method for Evaluation of Diesel Engine Oils in T-8 Diesel Engine
D6278 Test Method for Shear Stability of Polymer Containing Fluids Using a European Diesel Injector Apparatus
D6896 Test Method for Determination of Yield Stress and Apparent Viscosity of Used Engine Oils at Low Temperature
D7109 Test Method for Shear Stability of Polymer-Containing Fluids Using a European Diesel Injector Apparatus at 30 Cycles and 90 Cycles
D7422 Test Method for Evaluation of Diesel Engine Oils in T-12 Exhaust Gas Recirculation Diesel Engine
E29 Practice for Using Significant Digits in Test Data to Determine Conformance with Specifications

3. Terminology

3.1 *Definitions:*

3.1.1 *blind reference oil, n—a reference oil*, the identity of which is unknown by the test facility.

3.1.1.1 *Discussion*—This is a coded reference oil that is submitted by a source independent from the test facility. **D4175**

3.1.2 *blowby, n—in internal combustion engines*, that portion of the combustion products and unburned air/fuel mixture that leaks past piston rings into the engine crankcase during operation.

3.1.3 *calibrate, v*—to determine the indication or output of a device (for example, thermometer, manometer, engine) with respect to that of a standard.

3.1.4 *candidate oil, n*—an oil that is intended to have the performance characteristics necessary to satisfy a specification and is intended to be tested against that specification. **D4175**

3.1.5 *exhaust gas recirculation (EGR), n*—the mixing of exhaust gas with intake air to reduce the formation of nitrogen oxides (NO_x). **Automotive Handbook**[4]

3.1.6 *heavy-duty, adj—in internal combustion engine operation*, characterized by average speeds, power output and internal temperatures that are close to the potential maximums. **D4485**

3.1.7 *heavy-duty engine, n—in internal combustion engine types*, one that is designed to allow operation continuously at or close to its peak output.

3.1.8 *non-reference oil, n*—any oil other than a reference oil; such as a research formulation, commercial oil, or candidate oil. **D4175**

3.1.9 *non-standard test, n*—a test that is not conducted in conformance with the requirements in the standard test method; such as running on an uncalibrated test stand, using different test equipment, applying different equipment assembly procedures, or using modified operating conditions. **D4175**

3.1.10 *oxidation, n—of engine oil*, the reaction of the oil with an electron acceptor, generally oxygen, that can produce deleterious acidic or resinous materials often manifested as sludge formation, varnish formation, viscosity increase, or corrosion, or combination thereof.

3.1.11 *reference oil, n*—an oil of known performance characteristics, used as a basis for comparison.

3.1.11.1 *Discussion*—Reference oils are used to calibrate testing facilities, to compare the performance of other oils, or to evaluate other materials (such as seals) that interact with oils. **D4175**

3.1.12 *sludge, n—in internal combustion engines*, a deposit, principally composed of insoluble resins and oxidation products from fuel combustion and the lubricant, that does not drain from engine parts but can be removed by wiping with a cloth. **D4175**

3.1.13 *standard test, n*—a test on a calibrated test stand, using the prescribed equipment that is assembled in accordance with the requirements in the test method, and conducted in accordance with the specified operating conditions.

3.1.14 *varnish, n—in internal combustion engines*, a hard, dry, generally lustrous deposit that can be removed by solvents but not by wiping with a cloth. **D4175**

3.1.15 *wear, n*—the loss of material from a surface, generally occurring between two surfaces in relative motion, and resulting from mechanical or chemical action, or a combination of both. **D7422**

4. Summary of Test Method

4.1 The test operation involves use of a Mack E-TECH V-MAC III diesel engine with Exhaust Gas Recirculation (EGR). Two oil flushes, each for 30 min, are followed by a test at constant speed and torque conditions for 252 h.

4.2 Take oil samples periodically and analyze for viscosity increase and soot content.

4.3 Engine rebuilds may be necessary as indicated by degradation of test parameters and are left to the discretion of the test laboratory. At rebuild, the power section of the engine is disassembled, solvent-cleaned, and rebuilt using an new

[4] Available from Robert Bosch GmbH, Postfach 50, D-7000 Stuttgart 1, Germany.

AVA Documents
Document Sharing Hub

Full document details: ASTM D7156-24

pistons, rings, cylinder liners, valves, and valve guides, in strict accordance with furnished specification.

4.4 Solvent-clean the engine crankcase and replace worn or defective parts.

4.5 Equip the test stand with appropriate accessories for controlling speed, torque, and various engine operating conditions.

5. Significance and Use

5.1 This test method was developed to evaluate the viscosity increase and soot concentration (loading) performance of engine oils in turbocharged and intercooled four-cycle diesel engines equipped with EGR. Obtain results from used oil analysis.

5.2 The test method can be used for engine oil specification acceptance when all details of the procedure are followed.

6. Apparatus

6.1 *General Description:*

6.1.1 The test engine is a Mack E-TECH V-MAC III, electronically controlled fuel injection with six electronic unit pumps, using 2002 cylinder heads (Annex A2). It is an open-chamber, in-line, six-cylinder, four-stroke, turbocharged, charge air-cooled, and compression ignition engine. The bore and stroke are 124 mm by 165 mm, and the displacement is 12 L.

6.1.2 The ambient laboratory atmosphere shall be relatively free of dirt and other contaminants as required by good laboratory standards. Filtering air, controlling temperature, and controlling humidity in the engine buildup area helps prevent accumulation of dirt and other contaminants on engine parts and aids in measuring and selecting parts for assembly.

6.2 *The Test Engine:*

6.2.1 *Mack T-11 Test Engine*—The engine and cylinder heads are available from Mack Trucks, Inc.[5] A complete parts list is shown in Table A2.1, Annex A2. Use test parts on a first-in/first-out basis.

6.2.2 *Engine Cooling System:*

6.2.2.1 Use a new Mack coolant conditioner shown in Table A2.1, Annex A2, every test, to limit scaling in the cooling system. At the expansion tank, pressurize the system to 103 kPa. Use the coolant shown in 7.3.

6.2.2.2 Use a closed-loop, pressurized external engine cooling system composed of a nonferrous core heat exchanger, reservoir, and water-out temperature control valve. The system shall prevent air entrainment and control jacket temperatures within the specified limit. Install a sight glass between the engine and the cooling tower to check for air entrainment and uniform flow in an effort to prevent localized boiling. Block the thermostat wide open.

6.2.2.3 Flow the coolant from the engine block fitting to the EGR coolers, see Fig. A1.3, Annex A1. Return the EGR coolant flow to the engine coolant-in line, near the coolant pump inlet, see Fig. A1.7, Annex A1.

6.2.3 *Auxiliary Oil System:*

6.2.3.1 To maintain a constant oil level in the pan, provide an additional minimum volume sump of 11.4 L by using a separate closed tank connected to the engine sump. Circulate oil through the system with an auxiliary pump. The system schematic is shown in Fig. A1.1, Annex A1. The inside diameters of the No. 6 and No. 8 lines are 10 mm and 13 mm, respectively. Use a minimum No. 8 size vent line. Equivalent lines may be substituted for Aeroquip[6] lines provided they have the proper inside diameters.

6.2.3.2 Locate the auxiliary oil system suction line on the exhaust side of the oil pan, so that the inside bottom of the auxiliary oil system suction fitting is down from the oil pan rail by 152 mm, and back from the front of the pan by 178 mm. Refer to Fig. A1.4, Annex A1. Connect the auxiliary oil system return line to the power steering pump cover on the front timing gear cover. Refer to Fig. A1.5, Annex A1. Connect the auxiliary oil scale vent line to the top of the auxiliary oil sump bucket and the dipstick tube opening.

6.2.3.3 Use Viking Pump Model SG053514 as the auxiliary oil pumps (see A2.9). Nominal pump speed is 1725 r/min. Shut off the auxiliary oil pumps if the auxiliary oil system goes dry.

6.2.3.4 Use a sight glass to aid in determining the oil level should the auxiliary oil system run dry. An example of a sight glass setup is shown in Fig. A1.18, Annex A1.

6.2.4 *Oil Cooling System:*

6.2.4.1 Use the oil cooler adapter blocks to mount the oil cooler to the engine. The adapter blocks are available from the supplier list in A2.6, Annex A2.

6.2.4.2 Use the oil filter housing (part number 27GB525M) shown in Fig. A1.8, Annex A1.

6.2.5 *Blowby Meter*—Use a meter capable of providing data at a minimum frequency of 6 min. To prevent blowby condensate from draining back into the engine, ensure the blowby line has a downward slope to a collection bucket. Ensure the collection bucket has a minimum volume of 18.9 L. Locate the blowby meter downstream of the collection bucket. The slope of the blowby line downstream of the collection bucket is unspecified.

6.2.6 *Air Supply and Filtration*—Use the Mack air filter element and the Mack filter housing shown in A2.3, Annex A2. Replace the filter cartridge when a ΔP of 2.5 kPa is reached. Install an adjustable valve (flapper) in the inlet air system at least two pipe diameters before any temperature, pressure, and humidity measurement devices. Use the valve to maintain inlet air restriction within required specifications.

6.2.7 *Fuel Supply*—Heating, cooling, or both of the fuel supply may be required. See Fig. A1.2, Annex A1, for a recommended system.

6.2.8 *Intake Manifold and Temperature Control*—Use stainless steel intake manifolds (P/N M10105GCX4332RSS for front manifold, M10105GCX5212RSS for rear manifold) available from the supplier listed in A2.2, Annex A2. Use an intercooler suited to control intake manifold temperature to the setpoint prescribed in Table 2.

[5] Mack Service Manuals are available from local Mack Trucks, Inc. distributors.

[6] Aeroquip lines are available at local hose distributors.

AVA Documents
Document Sharing Hub

Full document details: ASTM D7156-24

6.2.9 *Injection Timing Control*—Remove the engine intake manifold temperature sensor. Use the intake manifold temperature to control injection timing in accordance with the Temperature to Injection Timing Correlation shown in Annex A4.

6.2.10 *Oil Pump*—Use a Mack P/B 315GC465BM oil pump. The oil pump is available from the supplier listed in A2.2, Annex A2.

6.2.11 *EGR Venturi Unit*—Use a stainless steel EGR venturi unit, P/N 762GBX433SS, available from the supplier listed in A2.2, Annex A2.

6.2.12 *Fuel Pressure Regulator*—Use a P/N 691GC227M2 fuel pressure regulator.

7. Engine Fluids

7.1 *Test Oil*—Use approximately 98 L of test oil for the test.

7.2 *Test Fuel*—Use PC-9-HS test fuel[7] from Chevron Phillips. The fuel shall have the properties and tolerances shown in the "PC-9-HS Fuel Specification" section of the "TMC-Monitored Test Fuel Specifications" document maintained by the TMC.

7.3 *Engine Coolant*—Use either Pencool 3000 coolant additive or Chevron Delo Extended Life Coolant 50/50. Use Pencool 3000 coolant additive at the manufacturer's recommended rate in demineralized water with less than 0.03 g/L of salts or distilled water. Chevron Delo Extended Life Coolant 50/50 is purchased premixed and should not be diluted. Pencool 3000 may be obtained from the supplier shown in A2.7, Annex A2, and Chevron Delo Extended Life Coolant 50/50 is available from local automotive distributors.

7.4 *Cleaning Materials*—Use a solvent meeting Specification D235, Type II, Class C for cleaning parts. (**Warning—**Use adequate safety precautions with all solvents and cleaners.) Other materials such as diesel fuel may be required by some labs in order to ensure parts cleanliness.)

8. Preparation of Apparatus at Rebuild

8.1 *Cleaning of Parts:*

8.1.1 *Engine Block*—Thoroughly spray the engine with solvent to remove any oil remaining from the previous test and air-dry, see 7.4. Additionally, wash with solvent after the use of an engine parts washer.

8.1.2 *Rocker Covers and Oil Pan*—Remove all sludge, varnish, and oil deposits. Rinse with solvent and air-dry. Additionally, wash with solvent after the use of an engine parts washer.

8.1.3 *Auxiliary Oil System*—Flush all oil lines, galleries and external oil reservoirs first with solvent to remove any previous test oil and then air-dry.

8.1.4 *Oil Cooler and Oil Filter*—Flush the oil cooler and filter lines first with solvent to remove any previous test oil and then air-dry. Additionally, wash with solvent after the use of an engine parts washer.

8.1.5 *Cylinder Head*—Clean the cylinder heads using a wire brush to remove deposits and rinse with solvent to remove any sludge and oil and then air-dry. Additionally, wash with solvent after the use of an engine parts washer.

8.1.6 *Intake Manifold*—At a minimum, clean the intake manifold at rebuild. Frequency of cleaning between rebuilds is at the laboratory's discretion. Scrub the manifold using a nylon brush and solvent, and then wash the manifold using an engine parts washer.

8.1.7 *EGR Coolers*—Clean by flushing with solvent and then air-drying, see 7.4. At a minimum, clean at rebuild. Frequency of cleaning between rebuilds is at the laboratory's discretion.

8.1.8 *EGR Venturi Unit*—Spray with solvent and scrub with a nylon brush. At a minimum, clean at rebuild. Frequency of cleaning between rebuilds is at the laboratory's discretion.

8.2 *Valves, Seats, Guides, and Springs:*

8.2.1 Replace valves, valve guides, seat inserts, valve stem keys and valve stem seals at rebuild.

8.2.2 Use oil when reaming guides. Hone finish, if desired. Valve stem-to-guide clearance shall be 0.038 mm to 0.089 mm for intake and 0.064 mm to 0.114 mm for exhaust.

8.3 *Cylinder Liner, Piston, and Piston Ring Assembly:*

8.3.1 *Cylinder Liner Fitting*—For proper heat transfer, fit cylinder liners to the block in accordance with the procedure outlined in the Mack Service Manual.

8.3.2 *Piston and Rings*—Cylinder liners, pistons, and rings are provided as a set and used as a set. Examine piston rings for any handling damage.

8.4 *Injectors and Injection Pumps:*

8.4.1 *Injectors*—Injector nozzles are available from the supplier shown in A2.2, Annex A2. Check the injector opening pressure at rebuild. Reset the injector opening pressure if it is outside the specification of 24 000 kPa + 2000 kPa. If operating parameters indicate deterioration of injectors, they may be checked and reset, if necessary.

8.4.2 *Injection Pumps*—The electronic unit pumps (EUP) may be changed at any time using the procedure specified in the Mack Service Manual. Be sure to enter the EUP's four-digit calibration code into the Engine Control Unit (ECU). The calibration code can be found on the EUP label.

8.5 *Assembly Instructions:*

8.5.1 *General*—Use only specified test parts for this test without material or dimensional modification. Obtain approval from the Test Monitoring Center (TMC) for exceptions such as a temporary parts supply problem and then note the exception in the test report. Use only genuine Mack Truck Inc. parts as replacement test engine parts. Assemble all parts as illustrated in the Mack Service Manual except where otherwise noted. Target all dimensions for the means of the specifications. Use Bulldog Premium EO-N Premium Plus Oil for lubricating parts during assembly (or later); see A2.10, Annex A2.

8.5.1.1 *Thermostat*—Block the thermostat wide open.

8.5.1.2 *Rod Bearings*—Install new rod bearings at rebuild.

8.5.1.3 *Main Bearings*—Install new main bearings at rebuild.

[7] The sole source of supply for test fuel known to the committee at this time is PC-9-HS Reference Diesel Fuel from Chevron Phillips Chemical Company LP, 10001 Six Pines Drive, The Woodlands, TX 77380. If you are aware of alternative suppliers, please provide this information to ASTM International Headquarters. Your comments will receive careful consideration at a meeting of the responsible technical committee,[1] which you may attend.

AVA Documents
Document Sharing Hub

Full document details: ASTM D7156-24

8.5.1.4 *Piston Under-crown Cooling Nozzles*—Take particular care in assembling the piston under-crown cooling nozzles to ensure proper piston cooling, see the Mack Service Manual.

NOTE 1—Proper oil pressure is also important to ensure sufficient oil volume for proper cooling.

8.5.2 *New Parts*—Use test parts on a first-in/first-out basis. Install the following new parts for each rebuild, see Table A2.1, Annex A2 for part numbers:

8.5.2.1 Cylinder liners.
8.5.2.2 Pistons.
8.5.2.3 Piston rings.
8.5.2.4 Overhaul gasket set.
8.5.2.5 Oil filters.
8.5.2.6 Engine coolant conditioner.
8.5.2.7 Primary fuel filter.
8.5.2.8 Secondary fuel filter.
8.5.2.9 Valve stem seals and keys.
8.5.2.10 Valve guides and inserts.
8.5.2.11 Valves.
8.5.2.12 Connecting rod bearings.
8.5.2.13 Main bearings.
8.5.2.14 Thrust washers.

8.6 *Measurements:*

8.6.1 *Calibrations*—Calibrate thermocouples, pressure gages, speed, and fuel flow measuring equipment prior to each reference oil test or at any time readout data indicates a need. Conduct calibrations with at least two points that bracket the normal operating range. Make these calibrations part of the laboratory record. During calibration, connect leads, hoses, and read-out systems in the normally used manner and calibrate with necessary standards. For controlled temperatures, immerse thermocouples in calibration baths. Calibrate standards with instruments traceable to the National Institute of Standards and Technology (NIST) on a yearly basis.

8.6.2 *Temperatures:*

8.6.2.1 *General*—Measure temperatures with thermocouples and conventional readout equipment or equivalent. For temperatures in the 0 °C to 150 °C range, calibrate temperature measuring systems to ± 0.5 °C for at least two temperatures that bracket the normal operating range. Insert all thermocouples so that the tips are located midstream of the flow unless otherwise indicated.

8.6.2.2 *Ambient Air*—Locate thermocouple in a convenient, well-ventilated position between 2 m and 3 m from the engine and hot accessories.

8.6.2.3 *Coolant*—Locate the coolant-out thermocouple in the water manifold prior to the thermostat housing. Locate in center of water stream. Refer to Fig. A1.6, Annex A1. Locate the coolant-in thermocouple anywhere between the heat exchanger and the coolant pump inlet (upstream of the junction with the EGR coolant return). Refer to Fig. A1.7, Annex A1.

8.6.2.4 *Oil Gallery*—Locate thermocouple at the center port on the filter housing. Insertion depth is 98 mm. Refer to Fig. A1.8, Annex A1.

8.6.2.5 *Oil Sump Temperature*—Using a front sump oil pan configuration, locate the thermocouple on the exhaust side of the oil pan, from the front by 127 mm and from the top by 178 mm. The thermocouple length is 102 mm. Refer to Fig. A1.4, Annex A1.

8.6.2.6 *Intake Air Temperature*—Locate the intake air thermocouple in the center of the air stream at the turbocharger inlet as shown in Fig. A1.9, Annex A1. Locate the temperature thermocouple upstream of the compressor inlet connection approximately 102 mm. It is not necessary to control intake air humidity, but measurements are required.

8.6.2.7 *Fuel In*—Locate a thermocouple at the fitting on the outlet side of the fuel transfer pump as shown in Fig. A1.10, Annex A1.

8.6.2.8 *Pre-Turbine Exhaust*—Locate one thermocouple in each side of the exhaust manifold section see Fig. A1.11, Annex A1. Locate the thermocouple downstream of the pre-turbine exhaust pressure sensor.

8.6.2.9 *Exhaust Tailpipe*—Locate a thermocouple in the exhaust pipe downstream of the turbine in accordance with Fig. A1.12, Annex A1.

8.6.2.10 *Intake Manifold*—Locate a thermocouple at the tapped fitting on the intake air manifold as shown in Fig. A1.13, Annex A1.

8.6.2.11 *EGR Cooler Inlet*—Distinct EGR cooler inlet temperature measurements are not necessary. Use the pre-turbine exhaust temperatures instead see 8.6.2.8.

8.6.2.12 *EGR Cooler Outlet*—Locate a thermocouple as shown in Fig. A1.14, Annex A1.

8.6.2.13 *EGR Pre-Venturi*—Locate a thermocouple as shown in Fig. A1.15, Annex A1. Locate the EGR pre-venturi thermocouple downstream of the EGR pre-venturi pressure sensor pickup.

8.6.2.14 *Additional*—Monitor any additional temperatures that the test laboratory regards as helpful in providing a consistent test procedure.

8.6.3 *Pressures*—Pressure measurements, sensors, and sensor calibrations shall conform to the research report.[8]

8.6.3.1 *Before Oil Filter*—Locate pickup at tapped hole on oil cooler fitting. See Fig. A1.16, Annex A1.

8.6.3.2 *After Oil Filter (Main Oil Gallery)*—Locate pickup at the left port of the filter-housing. See Fig. A1.8, Annex A1.

NOTE 2—The E7 engine has only one oil gallery, which serves as both a main gallery and piston-cooling gallery.

8.6.3.3 *Pre-Turbine Exhaust*—Locate pickup in each side of exhaust manifold section (tap is upstream of the pre-turbine temperature thermocouple), see Fig. A1.11, Annex A1. This measurement is not mandatory, but it is recommended for diagnostic and safety purposes.

8.6.3.4 *Intake Manifold (Air Boost)*—Take measurement at tapped fitting provided on the intake manifold as shown in Fig. A1.17, Annex A1.

8.6.3.5 *Intake Air Pressure (Intake Air Restriction)*—Measure with a Keil Probe (p/n KDF-8-W required) located upstream of the compressor inlet (see Fig. A1.9, Annex A1)

[8] Supporting data have been filed at ASTM International Headquarters and may be obtained by requesting Research Report RR:D02-1218. Contact ASTM Customer Service at service@astm.org.

AVA Documents
Document Sharing Hub

Full document details: ASTM D7156-24

approximately 203 mm. The probes may be obtained from the supplier shown in A2.10.

8.6.3.6 *Exhaust Back*—Locate pickup in exhaust pipe after turbocharger in center of exhaust stream. Measure exhaust backpressure in a straight section of pipe, downstream of the turbo by (305 to 406) mm, with a pressure tap hole as shown in Fig. A1.12, Annex A1.

8.6.3.7 *Crankcase Pressure*—Locate pickup at any location in the auxiliary oil system vent line, such as between the dipstick tube fitting and the top of the auxiliary oil sump bucket.

8.6.3.8 *Compressor Discharge*—Locate pickup within 152 mm of the second compressor.

8.6.3.9 *Coolant System*—Locate pickup at the top of the coolant system expansion tank.

8.6.3.10 *Barometric Pressure*—Locate barometer in a convenient location in the lab, above ground level approximately 1.2 m.

8.6.3.11 *EGR Pre-Venturi Pressure*—Locate pickup as shown in Fig. A1.15, Annex A1. Locate the EGR pre-venturi pressure pickup upstream of the EGR pre-venturi temperature thermocouple.

8.6.3.12 *Fuel Pressure*—Locate pickup at the end of the fuel rail as shown in Fig. A1.19, Annex A1.

8.6.4 *Carbon Dioxide Sensors*—Locate the intake probe as shown in Fig. A1.8, Annex A1. Locate the exhaust probe as shown in Fig. A1.12, Annex A1.

8.6.5 *Engine Blowby*—Connect the metering instrument to the filter element canister on the engine front cover.

8.6.6 *Fuel Consumption Measurements*—Place the measuring equipment in the fuel line before the primary fuel filter. Install the primary fuel filter before the fuel transfer pump and install the secondary filter before the unit injection pumps. Do not allow the fuel return lines to become plugged. Accurate fuel consumption measurements require proper accounting of return fuel.

8.6.7 *Humidity*—Place the measurement equipment between the inlet air filter and compressor in such a manner as not to affect temperature and pressure measurements. Do not condition the intake air downstream of the humidity sensor. Report humidity on the appropriate form.

8.7 *System Time Responses*—The maximum allowable system time responses are shown in Table 1. Determine system time responses in accordance with the Data Acquisition and Control Automation II (DACA II) Task Force Report.

9. Procedure

9.1 *Pretest Procedure:*

9.1.1 *Initial Oil Fill for Flush or Break-In*—The initial oil fill is 28.1 kg of test oil. Add the first 3.3 kg of fresh test oil to the oil filters (half in each filter), then turn on the auxiliary oil pumps and add an additional 24.8 kg of test oil to the engine. This oil may be added directly through the engine oil fill tube.

TABLE 1 Maximum Allowable System Time Responses

Measurement Type	Time Response (s)
Speed	2.0
Temperature	3.0
Pressure	3.0
Flow	45.0

9.1.2 *Pretest Break-In Sequence for New Engine Builds*—Use a break-in sequence for a new engine build. Start the engine as described in Annex A5. Run the break-in at the test operating conditions shown in Table 2 for 1 h. At the end of 1 h, shut down the engine in accordance with Annex A5. Drain the oil from the oil pan and auxiliary oil reservoir. Replace all oil filters. Refill the engine with test oil, see 9.1.1, and conduct the test in accordance with 9.4.

9.1.3 *Pretest Oil Flush Sequence for Existing Engine Builds:*

9.1.3.1 For an existing engine build, a pretest flush sequence is required. Start the engine as described in Annex A5. Run a pretest oil flush at the test operating conditions shown in Table 2 for 30 min. At the end of 30 min, shut down the engine as describe in Annex A5. Drain the oil from the oil pan and auxiliary oil reservoir. Refill the engine with oil, see 9.1.1, and repeat the flush sequence once. For tests on an existing engine build, a post-test flush sequence as described in 9.4.2 should be done prior to the pretest flushes.

9.1.3.2 At the end of the second 30 min pretest flush, shut down the engine in accordance with Annex A5. Drain the oil from the oil pan and auxiliary oil reservoir. Replace all oil filters. Refill the engine with test oil see 9.1.1, and conduct the test in accordance with 9.4. When performing the pre-test oil charge, do not account for any hang up oil left in the oil system.

9.2 *Engine Start-Ups*—Perform all engine start-ups in accordance with Annex A5. Start-ups are not included as test time. Test time starts as soon as the engine returns to the test cycle. The start date and time of a test is defined as when the engine first reaches test conditions as shown in Table 2. Crank the engine prior to start-up to fill the engine oil passages. This practice will enhance engine durability significantly.

9.3 *Engine Shutdowns:*

9.3.1 Perform all non-emergency shutdowns in accordance with Annex A5. The shutdown operation does not count as test time. Record the length and reason of each shutdown on the appropriate form.

9.3.2 Do not exceed ten shutdowns for all operationally valid tests. Additionally, all operationally valid tests should not exceed 150 h of downtime. Conduct an engineering review if either condition is exceeded.

9.4 *Test Cycle:*

9.4.1 The test cycle includes a break-in or a pretest oil flush sequence as shown in 9.1.2 and 9.1.3. Test operating conditions are shown in Table 2. Conduct the test at these test conditions by operating for 252 h. Follow the test with a post-test oil flush sequence see 9.4.2 unless the engine build life has been exhausted, at which point the engine is torn down for rebuild.

9.4.1.1 At any time during the test, injection timing may be changed ±3.0° BTDC from the initial timing to ensure meeting the 96 h, 192 h, and 228 h soot windows. See 11.7.

9.4.2 *Post-Test Oil Flush Sequence:*

9.4.2.1 Within 30 min of EOT, begin the post-test flush by draining the oil pan and auxiliary oil reservoir. Remove the oil filters, including the centrifugal filter. As soon as possible,

AVA Documents
Document Sharing Hub

Full document details: ASTM D7156-24

TABLE 2 Test Conditions

Parameters	Limits Test
Time, h	252
Injection timing, °BTDC	Variable[A]
Controlled Parameters[B]	
Speed, r/min	1800
Fuel flow, kg/h	53.5
Intake CO_2 Level, %	1.5 ± 0.05
Inlet manifold temperature, °C	70
Coolant out temperature, °C	66
Fuel in temperature, °C	40
Oil gallery temperature, °C	88
Intake air temperature, °C	25
Ranged Parameters[C]	
Inlet air restriction, kPa	3.5–4.0
Inlet manifold pressure, kPa	140 minimum
Exhaust back pressure, kPa	2.7–3.5
Crankcase pressure, kPa	0.25–0.75
Uncontrolled Parameters	
Power, kW	~257
Torque, N·m[D]	Record[D]
Exhaust temperature, °C	
Pre-turbine	Record
Tailpipe	Record
Oil sump temperature, °C	Record
Coolant in temperature, °C	Record
EGR cooler inlet temperature front, °C	Record
EGR cooler outlet temperature rear, °C	Record
EGR pre-venturi temperature, °C	Record
Inlet air dew point, °C	Record
Inlet air humidity, g/kg	Record
Blowby, L/min	Record
Pre-turbine exhaust pressure, kPa	Record
Main gallery oil pressure, kPa	Record
Fuel pressure	Record
Oil filter ΔP, kPa	Not to exceed 207[E]

[A] For pretest and post-test oil flushes, injection timing is not specified.
[B] All control parameters shall be targeted at the mean indicated.
[C] All ranged parameters shall fall within the specified ranges.
[D] At 98.2 kPa and 29.5 °C dry air.
[E] If oil filter ΔP exceeds 207 kPa, change the two full flow filters. If the filters are changed, attempt to recover as much oil as possible by draining the filters. No new oil is to be added. The test report shall indicate if the filters are changed.

install new filters, refill (see 9.1.1) with Bulldog EO-N Premium Plus Oil, and run at test conditions as shown in Table 2 for 30 min.

9.4.2.2 Drain the post-test flush oil from the oil pan and the auxiliary oil reservoir. Flush the engine and auxiliary oil system with solvent until clean. Remove the oil pan and solvent clean and then reassemble. To remove the solvent, fill the engine with Bulldog EO-N Premium Plus oil and run the final post-test oil flush at test conditions for 30 min (see Table 2). Drain the oil from the oil pan and auxiliary oil reservoir. The engine is now ready for the pretest flush sequence for the next test.

9.4.3 *Operational Validity*—Determine operational validity in accordance with Annex A3.

9.5 *Oil Samples*—Take 120 mL oil samples at every 12 h interval. Take the EOT oil sample within 30 min of test completion. Obtain oil samples from the pre-filter pressure port, refer to Fig. A1.16, Annex A1. Accomplish this by installing a tee fitting, a small petcock valve, and 254 mm to 305 mm of No. 4 Aeroquip line from which the sample is taken. Prior to each sample, take a 240 mL purge. After sampling has been completed, return the purge to the engine.

9.6 *Oil Mass Measurements*—Record the oil mass every 6 min and compute the oil consumption, see 10.3, from these readings.

9.7 *Fuel Samples*—Take fuel samples (two 1 L samples) prior to the start of test and at EOT.

9.8 *Periodic Measurements:*

9.8.1 Make measurements at 6 min intervals on the parameters listed in 9.8.2 and record statistics on the appropriate form. Use automatic data acquisition. Recorded values shall have minimum resolution as shown in Table 3. Characterize the procedure used to calculate the data averages on the appropriate form.

9.8.2 *Parameters:*

9.8.2.1 Speed, r/min.

9.8.2.2 Torque, N·m.

9.8.2.3 Oil gallery temperature, °C.

9.8.2.4 Oil sump temperature, °C.

9.8.2.5 Coolant out temperature, °C.

9.8.2.6 Coolant in temperature, °C.

9.8.2.7 Intake air temperature, °C.

9.8.2.8 Intake manifold temperature, °C.

AVA Documents
Document Sharing Hub

Full document details: ASTM D7156-24

TABLE 3 Minimum Resolution of Recorded Measurements

Parameter	Record Data to Nearest
Speed	1 r/min
Fuel flow	0.1 kg/h
Coolant temperatures	0.1 °C
Fuel in temperature	0.1 °C
Intake air temperature	0.1 °C
Intake manifold temperature	0.1 °C
Exhaust back pressure	0.1 kPa
Inlet air restriction	0.1 kPa
Torque	1 N•m
Power	1 kW
Humidity	0.1 g/kg
Blowby	1 L/min
Inlet air dew point	1 °C
Oil temperatures	0.1 °C
Exhaust temperatures	1 °C
EGR temperatures	1 °C
Oil pressures	1 kPa
Crankcase pressure	0.1 kPa
Intake manifold pressure	1 kPa
Fuel pressure	1 kPa
Oil mass	0.001 kg

9.8.2.9 Intake manifold pressure, kPa.

9.8.2.10 Fuel flow, s/kg or kg/h.

9.8.2.11 Fuel inlet temperature, °C.

9.8.2.12 Tailpipe exhaust back pressure, kPa.

9.8.2.13 Before filter oil pressure, kPa.

9.8.2.14 Main gallery oil pressure, kPa.

9.8.2.15 Crankcase pressure, kPa.

9.8.2.16 Pre-turbine exhaust temperature, front manifold, °C.

9.8.2.17 Pre-turbine exhaust temperature, rear manifold, °C.

9.8.2.18 Inlet air restriction, kPa.

9.8.2.19 Tailpipe exhaust temperature, °C.

9.8.2.20 Crankcase blowby, L/min (see 9.10).

9.8.2.21 Pre-turbine exhaust pressure, front manifold, kPa.

9.8.2.22 Pre-turbine exhaust pressure, rear manifold, kPa.

9.8.2.23 Inlet air humidity, g/kg.

9.8.2.24 EGR cooler outlet temperature, °C.

9.8.2.25 EGR pre-venturi temperature, °C.

9.8.2.26 Inlet air dew point, °C.

9.8.2.27 Oil mass, kg.

9.8.2.28 Fuel pressure, kPa.

9.8.3 *Carbon Dioxide Measurements*—Measure intake and exhaust carbon dioxide levels every 4 h. Calibrate the measurement equipment with span gases prior to each measurement.

9.9 *Blowby*—Record the crankcase blowby on the appropriate form. Take care to prevent oil traps from occurring in the blowby line at any time during operation.

9.10 *Centrifugal Oil Filter Mass Gain*—Prior to the start of test, determine the mass of the centrifugal oil filter canister. At EOT, remove the centrifugal oil filter canister from the engine and drain upside down for 30 min. After draining, determine the mass of the canister and record on the appropriate form. Determine the centrifugal oil filter mass gain for each test.

9.11 *Oil Filter ΔP Calculation:*

9.11.1 The reported oil filter ΔP is the maximum oil filter ΔP that occurs as a result of the test.

Calculate the oil filter ΔP as follows:

$$\Delta P_{Increase} = \Delta P_{max} - \Delta P_{initial} \quad (1)$$

where:

ΔP_{max} = the maximum ΔP across the oil filter.

$\Delta P_{initial}$ = the ΔP across the oil filter at the start of test conditions.

9.11.2 If an oil filter change is made, add the oil filter ΔP value obtained after the filter change to the oil filter ΔP obtained prior to the filter change. If a shutdown occurs, add the oil filter ΔP value obtained after the shutdown to the oil filter ΔP obtained prior to the shutdown. Change the oil filter if the filter pressure differential (not the $\Delta P_{Increase}$) exceeds 207 kPa. Report oil filter $\Delta P_{Increase}$ on the appropriate form.

10. Inspection of Engine, Fuel, and Oil

10.1 *Oil Inspection:*

10.1.1 Analyze each oil sample for viscosity at 100 °C in accordance with Test Method D5967, Annex A3. Determine viscosity increase using the 90-pass DIN shear viscosity, see 10.1.5, as the minimum viscosity. To maintain accuracy and precision conduct all viscosity measurements at a TMC-calibrated laboratory.

10.1.2 Analyze each oil sample for soot content in accordance with Test Method D5967, Annex A4. To maintain accuracy and precision conduct all soot measurements at a TMC-calibrated laboratory. Report soot to two decimals.

10.1.3 Every 24 h, starting with the 12 h oil sample and including new and EOT samples, determine base number in accordance with Test Method D4739; determine acid number in accordance with Test Method D664; determine oxidation using integrated IR.

10.1.4 Every 24 h, starting with the 24 h oil sample and including new and EOT samples, determine iron, lead, copper, chromium, aluminum, silicon, tin, and sodium levels in accordance with Test Method D5185.

10.1.5 For the new oil sample only, determine the 30-pass DIN shear viscosity in accordance with Test Method D6278 or D7109. Also for the new oil sample, determine the 90-pass DIN shear viscosity in accordance with Test Method D7109.

10.1.6 For the 180 h and EOT oil samples, determine MRV viscosity at −20 °C in accordance with Test Method D6896. As part of the MRV measurement procedure, be sure to prepare the sample in accordance with A4.3, Annex A4 of Test Method D5967. The maximum reported result is 400 Pa·s, and use this value if the results are too viscous to measure.

10.1.7 For the 96 h, 192 h, and EOT oil samples, determine fuel dilution in accordance with Test Method D3524.

10.1.8 Conduct all oil analyses as soon as possible after sampling.

10.2 *Fuel Inspections*—Use fuel purchase inspection records to ensure conformance to the specifications listed in Table 1 for the last batch of fuel used during the test. In addition, perform the following inspections on new (0 h) and EOT (252 h) fuel samples: API Gravity at 15.6 °C, Test Method D287 or D4052 Total Sulfur, mass percent, Test Method D5453 (Test Method D2622 or D4294 can be substituted). Use one 1 L sample for inspections.

10.3 *Oil Consumption Calculation:*

AVA Documents
Document Sharing Hub

Full document details: ASTM D7156-24

10.3.1 Using the oil mass measurements taken every 6 min, see 9.6, determine the oil consumption, in grams per hour, by performing linear regression on the data starting from 25 h and ending at 252 h or when the auxiliary oil sump runs dry. The oil consumption is the slope of the regression line.

10.3.1.1 Following any shutdowns, exclude 1 h of oil mass data from the regression to account for the stabilizing of the oil scale.

10.3.1.2 The auxiliary oil sump is considered to have run dry when the oil mass curve shows a significant flattening which indicates that the oil mass is no longer decreasing.

10.3.1.3 Report the oil consumption for the test on the appropriate form. The operational validity requirement for oil consumption is shown in 11.7.1.

11. Laboratory and Engine Test Stand Calibration /Non-Reference Oil Test Requirements

11.1 *Calibration Frequency*—To maintain test consistency and severity levels, calibrate the engine and test stand at regular intervals.

11.2 *Calibration Reference Oils*—The reference oils used to calibrate T-11 test stands have been formulated or selected to represent specific chemical types or performance levels, or both. Obtain the reference oils from the TMC. The TMC will assign reference oils for calibration tests. These oils are supplied under code numbers (blind reference oils).

11.2.1 *Reference Oils Analysis*—Do not submit reference oils to physical or chemical analyses for identification purposes. Identifying the oils by analyses could undermine the confidentiality required to operate an effective blind reference oil system. Therefore, reference oils are supplied with the explicit understanding that they will not be subjected to analyses other than those specified within this procedure unless specifically authorized by the TMC. In such cases where analyses are authorized, supply written confirmation of the circumstances involved, the data obtained, and the name of the person authorizing the analysis to the TMC.

11.3 *Test Numbering*—Number each T-11 test to identify the test stand number, the test stand run number, engine serial number, and engine hours at the start of the test. The sequential stand run number remains unchanged for reruns of aborted, invalid, or unacceptable calibration tests. However, follow the sequential stand run number by the letter A for the first rerun, B for the second, and so forth. For calibration tests, engine hours shall be zero. For non-reference oil tests, engine hours are the test hours accumulated since last calibration. For example, 58-12A-2H0380-0 defines a test on stand 58 and stand run 12 as a calibration test that was run twice on engine 2H0380 (serial number). A test number of 58-14-2H0380-252 defines a test on stand 58 and stand run 14 as a non-reference oil test on engine 2H0380, which has run 252 h since the last reference.

11.4 *New Laboratories and New Test Stands:*

11.4.1 A new laboratory is any laboratory that has never previously calibrated a test stand under this test method, or has not calibrated a test stand within one year from the expiration of the last calibration period at that laboratory. All stands at a new laboratory are considered new stands.

11.4.2 A new stand is a test cell and support hardware that has never previously been calibrated under this test method, or has not been calibrated within a year from the expiration of the last calibration period on that stand.

11.4.3 Calibrate a new test stand in accordance with the Lubricant Test Monitoring System (LTMS).[9] Generally, new test stands require two successful calibration tests. However, provisions do exist within the LTMS to allow new stands to calibrate with one test, based upon previous test experience within the laboratory.

11.5 *Test Stand Calibration:*

11.5.1 *Test Stand Calibration*—Perform a calibration test on a reference oil assigned by the TMC after 1512 non-reference oil test hours or after six months have elapsed since the completion of the last successful calibration test. An unsuccessful calibration test voids any current calibration on the test stand. A non-reference oil test may be started in a test stand provided at least 1 h remains in its calibration period.

11.5.2 *Test Engine Rebuild*—A newly rebuilt test engine does not require a calibration test. Run a break-in after a rebuild. The timing and frequency of engine rebuilds is left to the discretion of the laboratory.

11.5.3 If non-standard tests are conducted on a calibrated test stand, the TMC may require the test stand to be recalibrated prior to running standard tests.

11.5.4 The TMC may shorten or extend calibrations at their discretion.

11.6 *Test Results*—The test results are Soot Content at 4 mm^2/s Viscosity Increase (percent), Soot Content at 12 mm^2/s Viscosity Increase (percent), Soot Content at 15 mm^2/s Viscosity Increase (percent), and MRV Viscosity (pascals seconds).

11.6.1 Use linear interpolation for calculating soot contents (at a given viscosity increase), using new oil 90–pass DIN shear viscosity result as the minimum viscosity (see 10.1.1 and 10.1.5).

11.6.2 *Correction Factors:*

11.6.2.1 *Soot Content at 12 mm^2/s Viscosity Increase*—For all tests using top ring Part Number 349GC3107 and finishing from September 14, 2005 through December 5, 2005, add a correction factor of –0.39 % to the original test result. For all tests finishing from December 6, 2005 through March 23, 2006, add a correction factor of –0.36 % to the original test result. For all tests finishing on or after March 24, 2006, add a correction factor of –0.35 % to the original test result. Report both the correction factor and the final result on the appropriate form.

11.6.2.2 *MRV Viscosity*—For all tests using top ring Part Number 349GC3107 and finishing from September 14, 2005 through December 5, 2005, add a correction factor of 1274 Pa·s to the original test result. For all tests finishing from December 6, 2005 through March 23, 2006, add a correction factor of

[9] The Lubricant Test Monitoring System may be obtained from the ASTM Test Monitoring Center (TMC), 203 Armstrong Drive, Freeport, PA 16229, Attention: Director.

AVA Documents
Document Sharing Hub

Full document details: ASTM D7156-24

0.713 Pa·s to the original test result. For all tests finishing on or after March 24, 2006, add a correction factor of 0.956 Pa·s to the original test result. Report both the correction factor and the final result on the appropriate form.

11.7 *Reference and Non-Reference Oil Test Requirements:*

11.7.1 All operationally valid tests shall produce a TGA soot level of 2.75 % ± 0.25 % at 96 h, 5.50 % ± 0.35 % at 192 h, and 6.53 % ± 0.44 % at 228 h. Any test which misses any of these soot windows is considered operationally invalid. A laboratory should terminate a test that has missed any soot windows. Additionally, all operationally valid tests shall not exceed an oil consumption of 65.0 g/h.

11.7.1.1 Adjust injection timing anytime to meet the three soot windows. Do not change injection timing after 228 h. As a guideline, do not change injection timing more than ±3° from the initial injection timing.

11.7.2 Calibration acceptance is determined in accordance with the Lubricant Test Monitoring System (LTMS) as administered by the TMC.

11.8 *Non-Reference Oil Test Result Severity Adjustments*—This test method incorporates the use of a Severity Adjustment (SA) for non-reference oil test results. A control chart technique, described in the LTMS, has been selected for identifying when a bias becomes significant for any of the following test results: Soot Content at 4 mm^2/s Viscosity Increase (percent), Soot Content at 12 mm^2/s Viscosity Increase (percent), Soot Content at 15 mm^2/s Viscosity Increase (percent), and MRV Viscosity (pascal seconds). When calibration test results identify a significant bias, determine a SA according to LTMS. Report the SA value on the appropriate form. Add this SA value to non-reference oil test results, and enter the adjusted result in the appropriate space. The SA remains in effect until a new SA is determined from subsequent calibration test results, or the test results indicate the bias is no longer significant. Calculate and apply SAs on a laboratory basis.

12. Report

12.1 *Reporting Reference Oil Test Results:*

12.1.1 For reference oil tests, the standardized report form set and data dictionary for reporting test results and for summarizing operational data are required. Report forms and the Data Dictionary are available from the TMC. Fill out the report forms in accordance with the formats shown in the Data Dictionary. When transmitting data electronically, a Header Data Dictionary shall precede the Data Dictionary. The latest version of this Header Data Dictionary can be obtained from the TMC either by FTP (Internet) or by calling the Test Engineer responsible for this particular test. Round the data in accordance with Practice E29.

12.1.2 During the test, if the engine is shut down or operated out of test limits, record the test hours, time, and date on the appropriate form. In addition, note in the comment section all prior reference oil tests that were deemed operationally or statistically invalid.

12.1.3 When reporting reference oil test results, transmit the test data electronically by utilizing the ASTM Data Communications Committee Test Report Transmission Model, which is available from the TMC. Transmit the data within five working days of test completion.

12.2 *Deviations from Test Operational Limits*—Report all deviations from specified test operational limits.

13. Precision and Bias

13.1 *Precision:*

13.1.1 Test precision is established on the basis of operationally valid reference oil test results monitored by the TMC.

13.1.1.1 *Intermediate Precision Conditions*—conditions where test results are obtained with the same test method using the same oil, with changing conditions such as operators, measuring equipment, test stands, test engines, and time.

NOTE 3—Intermediate precision is the appropriate term for this test method rather than repeatability, which defines more rigorous within-laboratory conditions.

13.1.1.2 *Intermediate Precision Limit (i.p.)*—the difference between two results obtained under intermediate precision conditions that would in the long run, in the normal and correct conduct of the test method, exceed the values shown in Table 4 in only one case in twenty.

13.1.1.3 *Reproducibility Conditions*—conditions where test results are obtained with the same test method using the same test oil in different laboratories with different operators using different equipment.

13.1.1.4 *Reproducibility Limit (R)*—the difference between two results obtained under reproducibility conditions that would, in the long run, in the normal and correct conduct of the test method, exceed the values shown in Table 4 in only one case in twenty.

13.1.2 Test precision, as of May 3, 2004 is shown in Table 4.

13.1.3 The TMC will be able to update precision data as it becomes available.

TABLE 4 Test Precision

Test Result	Measured Units			
	Intermediate Precision		Reproducibility, (*R*)	
	$S_{i.p.}$ [A]	*i.p.* [B]	S_R [A]	R [B]
Soot at 4 mm^2/s viscosity increase (%)	0.24	0.67	0.25	0.70
Soot at 12 mm^2/s viscosity increase (%)	0.23	0.64	0.24	0.67
Soot at 15 mm^2/s viscosity increase (%)	0.28	0.76	0.28	0.78
MRV viscosity (Pa·s)	1.13971	3.191	1.17417	3.288

[A] *S* = standard deviations.
[B] This value is obtained by multiplying the standard deviation by 2.8.

Documents
Document Sharing Hub

Full document details: ASTM D7156-24

13.2 *Bias*—Bias determined by applying an accepted statistical technique to reference oil test results and when a significant bias is determined, a severity adjustment is permitted for non-reference oil test results, see 11.8.

14. Keywords

14.1 diesel engine oil; exhaust gas recirculation; lubricants; soot; T-11 diesel engine; viscosity

ANNEXES

(Mandatory Information)

A1. SYSTEM SCHEMATICS AND SENSOR LOCATIONS

A1.1 Properly locating the sensor devices is important to this test. The following figures indicate the sensor locations for the T-11 engine components.

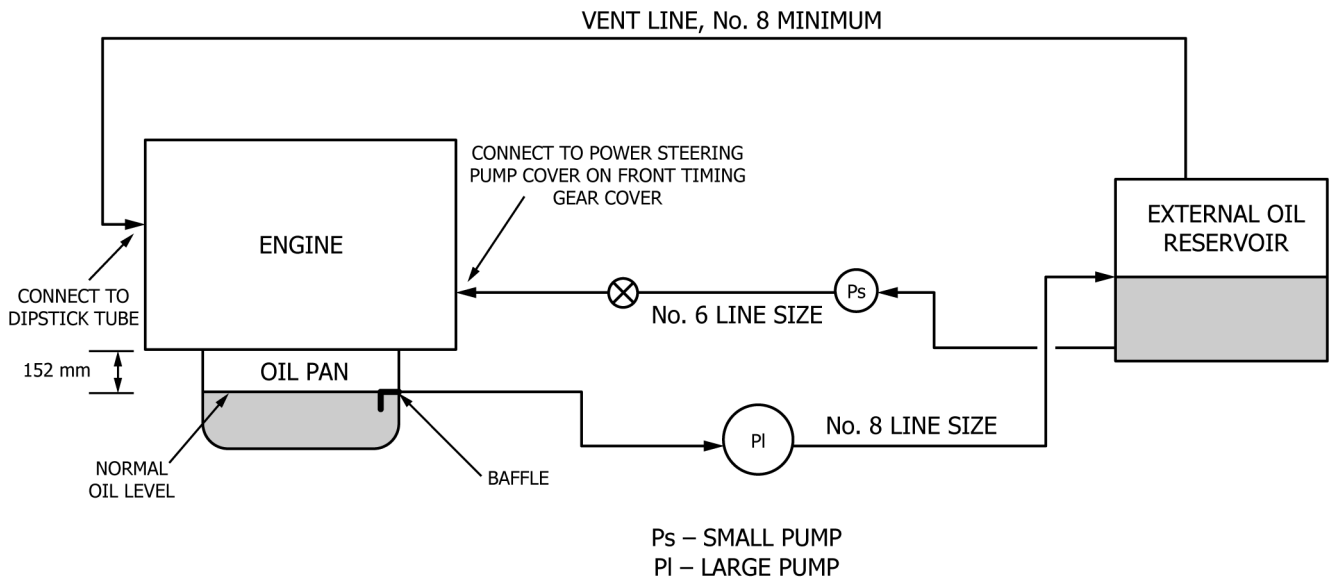

FIG. A1.1 Auxiliary Oil System

Documents
Document Sharing Hub
Full document details: ASTM D7156-24