NOTICE: This standard has either been superseded and replaced by a new version or withdrawn.
Contact ASTM International (www.astm.org) for the latest information

Designation: D 751 – 00$^{\epsilon 1}$

An American National Standard

Standard Test Methods for Coated Fabrics[1]

This standard is issued under the fixed designation D 751; the number immediately following the designation indicates the year of original adoption or, in the case of revision, the year of last revision. A number in parentheses indicates the year of last reapproval. A superscript epsilon (ϵ) indicates an editorial change since the last revision or reapproval.

This standard has been approved for use by agencies of the Department of Defense.

ϵ[1] NOTE—Fig. 4 was editorially enlarged in April 2005.

1. Scope

1.1 These test methods are applicable, but not limited to, rubber-coated fabrics, that is, tarpaulins, rainwear, and similar products.

1.2 The scope of each of these test methods appears in the section in which the test method is described.

1.3 The test methods appear in the following sections:

Test Method	Section
Dimensions and Mass	7-10
Breaking Strength	11
Procedure A—Grab Test Method	12-15
Procedure B—Cut Strip Test Method	16
Elongation	17
Bursting Strength	18-21
Puncture Resistance	22-25
Tearing Strength	26
Procedure A—Pendulum Method	27-32
Procedure B—Tongue Tear Method	33-36
Trapezoidal Tear	37-40
Hydrostatic Resistance	41
Procedure A—Mullen Type Tester	42-45
Procedure B—Rising Water Column Tester	46-49
Adhesion Coating (to Fabrics)	50-53
Strength of Coating	54-58
Tack-Tear Resistance	59-63
Low Temperature Bend Test	64
Low Temperature Impact Test	65
Low-Temperature Crack Resistance	66-70
Seam Strength	71-76
Accelerated Heat Aging (Oven Method)	77-84
Dead Load Seam Strength	85-88
Blocking Resistance at Elevated Temperatures	89-93
Crush Resistance	94-98
Wicking of Coated Cloth	99-103

1.4 The values stated in SI units are to be regarded as the standard. The values given in parentheses are for information only.

1.5 *This standard does not purport to address all of the safety concerns, if any, associated with its use. It is the responsibility of the user of this standard to establish appropriate safety and health practices and determine the applicability of regulatory limitations prior to use.*

2. Referenced Documents

2.1 *ASTM Standards:* [2]

D 573 Test Method for Rubber—Deterioration in an Air Oven

D 1349 Practice for Rubber—Standard Temperatures for Testing

D 1424 Test Method for Tearing Strength of Fabrics by Falling-Pendulum Type (Elmendorf) Apparatus

D 2136 Test Method for Coated Fabrics—Low-Temperature Bend Test

D 2137 Test Methods for Rubber Property—Brittleness Point of Flexible Polymers and Coated Fabrics

D 4483 Practice for Evaluating Precision for Test Method Standards in the Rubber and Carbon Black Manufacturing Industries

3. Significance and Use

3.1 Coated fabrics and rubber products made from coated fabrics are important items of commerce, and adequate test methods must be available to ensure the quality of these products. These test methods provide for this testing capability.

4. Standard Conditions

4.1 *Test Conditions*—Coated fabrics shall be tested in an environment satisfying the conditions as defined in 4.2 or 4.3 unless otherwise specified, or as per agreement between supplier and purchaser. When it is known that the coated fabric is to be used in a tropical environment, the atmosphere described in 4.3 shall be specified.

4.2 *Temperate Atmosphere*—The standard condition for testing coated fabrics shall be that reached by the fabric when

[1] These test methods are under the jurisdiction of ASTM Committee D11 on Rubber and are the direct responsibility of Subcommittee D11.37 on Coated Fabrics and Rubber Thread.

Current edition approved July 10, 2000. Published September 2000. Originally approved in 1943. Last previous edition approved in 1998 as D 751 – 98.

[2] For referenced ASTM standards, visit the ASTM website, www.astm.org, or contact ASTM Customer Service at service@astm.org. For *Annual Book of ASTM Standards* volume information, refer to the standard's Document Summary page on the ASTM website.

Copyright © ASTM International, 100 Barr Harbor Drive, PO Box C700, West Conshohocken, PA 19428-2959, United States.

Documents
Document Sharing Hub

Full document details: ASTM D751-00e1

in moisture equilibrium with a standard atmosphere having a relative humidity of 50 ± 5 % at 23 ± 2°C (73 ± 4°F).

4.3 *Tropical Atmosphere*—The standard condition for testing coated fabrics shall be that reached by the fabric when in moisture equilibrium with a standard atmosphere having a relative humidity of 65 ± 5 % at 27 ± 2°C (80 ± 2°F).

4.4 *Moisture Equilibrium*—It shall be considered that moisture equilibrium is reached when after free exposure to air in motion, there is no progressive increase in mass. Moisture equilibrium shall be approached from the dry side (not moisture-free). Certain coatings may greatly retard moisture penetration into the fabric; therefore, fabrics coated on both sides may require 24 h or more to reach equilibrium.

5. Time Lapse Between Vulcanization and Testing

5.1 For all test purposes, the minimum time between vulcanization and testing should be 16 h.

5.2 For nonproduct tests, the maximum time between vulcanization and testing should be four weeks, and for evaluations intended to be comparable, the tests, as far as possible, should be carried out after the same time interval.

5.3 For product tests, where possible, the time between vulcanization and testing should not exceed three months. In other cases, tests should be made within two months of the date of receipt by the customer.

NOTE 1—Section 5 is not applicable for coated fabrics not requiring vulcanization.

6. Precision and Bias

6.1 *Precision*—These precision statements have been prepared in accordance with Practice D 4483. Please refer to Practice D 4483 for terminology and other testing and statistical concepts (see Annex A1 for precision tables).

6.2 The precision results give an estimate of the precision of these test methods with the materials (rubbers) used in the particular interlaboratory program as described in Annex A1. The precision parameters should not be used for acceptance/rejection testing of any group of materials without documentation that they are applicable to those particular materials and the specific testing protocols that include these test methods.

6.3 *Bias*—In test method statistical terminology, bias is the difference between an average test value and the reference or true test property value. Reference values do not exist for these test methods since the value or level of the test property is exclusively defined by the test method. Bias, therefore, cannot be determined.

DIMENSIONS AND MASS

7. Length

7.1 *General Method*—Lay the coated fabric out smooth, without tension, on a horizontal surface and measure the length parallel to the selvage; or, measure successive portions, each at least 5 m (5 yd) in length, under the same conditions.

7.2 *Drum Method*—Run the coated fabric over a measuring drum with just enough uniform tension to keep it running flat and true. Determine the length from the dial or counter on the drum and its calibration.

8. Width

8.1 Measure the width with the coated fabric laid out smooth on a horizontal surface but without tension in either direction. Report the average of at least five different measurements uniformly distributed along the full length of a roll or piece as the average width of the roll or piece.

9. Thickness

9.1 *Thickness Gage*—The gage used for the measurement of thickness shall be of the deadweight type equipped with a dial graduated to read directly to 0.025 mm (0.001 in.). The presser foot shall be circular with a diameter of 9.52 ± 0.03 mm (0.375 ± 0.001 in.). The presser foot and moving parts connected therewith shall be weighted so as to apply a total force of 1.7 ± 0.1 N (6 ± 0.1 oz) equivalent to a pressure of 23.5 ± 0.5 kPa (3.4 psi) to the specimen. The presser foot and anvil surfaces shall be plane to within 0.0025 mm (0.0001 in.) and parallel to each other to within 0.0025 mm (0.0001 in.). The gage shall be calibrated for the actual load exerted by the presser foot by means of any device so arranged as to measure the total vertical force exerted by the presser foot at the several gage readings or presser foot levels selected for calibration. The presser foot shall be brought to each calibration level from a higher one.

NOTE 2—It is suggested that the calibration may be accomplished by supporting the presser foot on a horizontal strap suspended from a weighing device so arranged that it may be raised or lowered gradually and leveled at any required position.

9.2 *Procedure*—Place the coated fabric upon the anvil of the gage smooth, but without tension. Lower the presser foot upon the material gradually (without impact), allow it to rest upon it for 10 s, and then observe the reading of the dial. Make similar measurements at not less than five different places uniformly distributed over the surface of the coated fabric exclusive of the area adjacent to either selvage and within one tenth the width of the fabric or within 2.5 m (100 in.) of either end of a roll or piece. Report the average of the five or more measurements as the average thickness.

10. Mass

10.1 *Method Applicable to a Piece, Cut, or Roll*—Weigh the full piece, cut, or roll, on a calibrated scale accurate to 0.25 %, measure the length and width of the coated fabric, and calculate the mass, reporting it in grams per square metre (ounces per square yard) to the nearest 2 g (0.1 oz).

10.2 *Method Applicable to a Sample*—Cut a specimen having an area of at least 125 cm^2 (20 $in.^2$), or a number of specimens not less than 50 mm (2 in.) square and having a total area of at least 125 cm^2 (20 $in.^2$) from the coated fabric, weigh on a calibrated scale accurate to 0.25 %, and calculate the mass, reporting it in grams per square metre (ounces per square yard). Unless a specimen the full width of the fabric is used, take no specimen nearer the selvage than one tenth the width of the fabric.

NOTE 3—This test method is intended for use when a small sample of coated fabric is sent to the laboratory for test. The result is considered to be applicable to the sample, but not to the piece or lot of goods from which the sample was taken unless the number of samples and method of sampling are specified and agreed upon by those concerned in the report.

AVA Documents
Document Sharing Hub

Full document details: ASTM D751-00e1

each sample should be tested in accordance with 9.2 and the results averaged to obtain the average mass in grams per square metre (or ounces per square yard).

BREAKING STRENGTH

11. Breaking Strength

11.1 Breaking strength shall be determined by the grab test method, unless the strip test method is specified. In the case of coated knit fabrics, the breaking strength may be more satisfactorily determined by the bursting strength method which shall be used when specified.

Procedure A—Grab Test Method

12. Testing Machine

12.1 The machine shall consist of three main parts:

12.1.1 Straining mechanism,

12.1.2 Clamps for holding specimen, and

12.1.3 Load and elongation recording mechanism(s).

12.2 *Straining Mechanism*—A machine wherein the specimen is held between the two clamps and strained by a uniform movement of the pulling clamp shall be used. Unless otherwise specified in the material specification, the machine shall be adjusted so that the pulling clamp shall have a uniform speed of 5 ± 0.2 mm/s (12 ± 0.5 in./min).

12.3 *Load and Elongation Recording Mechanism(s)*—Calibrated dial, scale, or chart to indicate applied load and elongation. Unless otherwise specified for load determination, the machine shall be adjusted or set so that the maximum load required to break the specimen will remain indicated on the calibrated dial or scale after the test specimen has ruptured.

12.4 *Capacity*—If the machine is of the pendulum type, it shall be of such capacity that the maximum load required to break the specimen shall be not greater than 85 % or less than 15 % of the rated capacity.

12.5 *Machine Efficiency*—The error of the machine shall not exceed 2 % up to and including a 200-N (50-lbf) force and 1 % over 200 N and 1 % at any reading within its loading range.

13. Clamps for Fabrics

13.1 The clamps for holding a specimen of coated fabric shall have metallic gripping surfaces sufficiently smooth, flat, and parallel as to prevent the test specimen from slipping or moving between the gripping surfaces when held under the pressure normal to operation. The dimension of all gripping surfaces parallel to the direction of application of the load shall be 25 mm (1 in.); the dimension perpendicular to this direction shall be 1 in. for the face jaw and 50 mm (2 in.) or more for the other. All edges that might cause a cutting action shall be rounded to a radius of not over 0.4 mm (1⁄64 in.). The design of the clamp shall be such that one gripping surface shall be an integral part of the rigid frame of the clamp while the other shall be on a part hinged or swiveled to the movable member of the clamp. The pressure between the gripping surfaces, sufficient to clamp the specimen firmly before the testing load is applied and to prevent slippage during the progress of the test, shall be secured by any suitably constructed mechanical device operating on the movable member of the clamp. The distance between the clamps at the start of the test shall be 75 mm (3 in.).

NOTE 4—As a practical method of determining the degree of flatness and parallelism of the assembled clamp mechanism, it is recommended that a sheet of thin white paper, between two thin sheets of carbon paper, be placed between the gripping surfaces, and the jaws then brought together with a light pressure.

14. Test Specimens

14.1 Specimens 100 mm (4 in.) in width and not less than 150 mm (6 in.) in length shall be cut from the coated fabric for test. Two sets of five specimens each will be required, one set for longitudinal breaking strength having the longer dimension parallel to the lengthwise direction of the goods, and the other set for transverse breaking strength, having the longer dimension parallel to the crosswise direction of the goods. No two specimens shall contain the same threads of the fabric in the direction to be tested. Unless otherwise specified, specimens shall be taken no nearer the selvage than one tenth the width of the coated fabric.

15. Procedure

15.1 Place the specimen symmetrically in the clamps of the machine (see Fig. 1) with the longer dimension parallel to and the shorter dimension at right angles to the direction of application of the force. Report the average of the results of the five individual tests in each direction as the longitudinal breaking strength and the transverse breaking strength of the fabric, respectively. If a specimen slips in the clamps, breaks in the clamps, breaks at the edges of the clamps, or if for any reason attributable to faulty operation, the result falls markedly below the average for the set of specimens, discard the result, take another specimen, and include the result of this break in the average.

Procedure B—Cut Strip Test Method

16. Procedure

16.1 Make the breaking strength test by the cut strip method in accordance with the directions for the grab method (Sections 12-15), with the exception that the specimens shall be cut 25 mm (1 in.) in width (or other width when specified).

ELONGATION

17. Procedure

17.1 Unless otherwise specified, obtain the elongation of a coated fabric at any stated force when the breaking strength

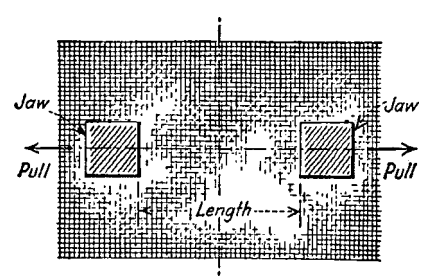

FIG. 1 Illustration of Grab Test

AVA Documents
Document Sharing Hub

Full document details: ASTM D751-00e1

(Sections 11-15) is determined and for the same specimens by means of a suitable autographic recording device on the testing machine. The elongation shall be the average of the results obtained for five specimens, and it shall be expressed as the percentage increase in length. Since the initial length and, therefore, the measured elongation depend upon the load applied in placing the specimen in the clamps of the machine, place an initial load of 1.7 N (6 ozf), or other initial load specified for the particular material in question, on the specimen before gripping the specimen in the lower clamp of the machine. Calculate the elongation from the start of the line as shown on the graphic record.

BURSTING STRENGTH

18. Testing Machine

18.1 The machine used for determining bursting strength shall be either of the following types:

18.2 *Tension Testing Machine with Ring Clamp*—The tension testing machine described in Section 12 shall be equipped with a bursting attachment of such design that the specimen held securely by a ring-clamp mechanism 44.0 ± 0.05 mm (1.750 ± 0.002 in.) in internal diameter with the center of the specimen pressed against a polished steel ball of 25.00 ± 0.025 mm (1.000 ± 0.002 in.) in diameter until a burst is produced. The direction of motion of the ring clamp shall be at right angles to the initial plane of the specimen. The capacity of the machine shall be considered suitable if, when the specimen breaks, the angle which the pendulum makes with the vertical is between 9 and 45°.

18.3 *Diaphragm Bursting Tester*—Requirements for a diaphragm bursting tester are outlined in 18.3.1, 18.3.2, and 18.3.3; however, any machine that operates on the same principle and has coaxial apertures of 31.2 ± 0.5 mm (1.24 ± 0.02 in.) in diameter in the clamping surfaces is a valid machine for this test.

18.3.1 The testing machine to be used may be either mechanically or manually operated. It shall permit the clamping of the material to be tested between two circular clamps not less than 75 mm (3 in.) in diameter having coaxial apertures of their centers 31.2 ± 0.5 mm (1.24 ± 0.02 in.) in diameter. The surfaces of the clamps between which the specimen is to be placed shall be concentrically grooved. The grooves shall be spaced not less than 0.8 mm (0.031 in.) apart and of a depth not less than 0.15 mm (0.006 in.). The grooves shall not start closer than 3.2 mm (0.125 in.) from the edge of the aperture. The surfaces of the clamps shall be metallic and any edge that might cause a cutting action shall be rounded to a radius of not over 0.4 mm (1⁄64 in.). The lower clamp shall be integral with the chamber in which a screw shall operate to force a liquid pressure medium at a uniform rate of 1.64 ± 0.07 cm^3/s (6.00 ± 0.25 $in.^3$/min) against a rubber diaphragm fitted to expand through the aperture exerting its force against the coated fabric set between the two clamps. (In the manually operated machine, this shall correspond to approximately 2 r/s of a hand wheel turning the displacement screw.)

18.3.2 In the mechanically operated machine, means shall be provided for stopping, at the instant of the rupture of the specimen, any further application of the loading pressure, and for holding unchanged the contents of the pressure chamber until the gross bursting pressure and tare diaphragm pressure indicated on the gage have been recorded. The machine shall be fitted with a Bourdon tube gage, maximum-reading type, having a dial 114 mm (4.5 in.) in diameter, and the scale divided to read in 2-N (0.5-lbf) units, with a range of from 0 to 500 N (0 to 100 lbf). Accuracy shall be within ±2 N. When the gage is calibrated, it shall be mounted in the same relative position as on the bursting tester. If calibrated with a deadweight tester, the weights shall be spun slowly to ensure free action of the piston.

NOTE 5—A higher capacity gage may be used provided it meets the accuracy requirements.

18.3.3 Provision shall be made for applying to the specimen, before clamping, a slight initial tension, which shall be uniform in all directions.

19. Test Specimens

19.1 At least ten specimens shall be cut, the smallest dimension of which shall be at least 12.5 mm (0.5 in.) greater than the outside diameter of the ring-clamp mechanism of the testing machine.

20. Procedure

20.1 When the pendulum machine is used, mount the test specimen in the ring clamp and move it at a rate of 5 mm/s (12 in./min) against the steel ball until rupture occurs. Record the pounds pressure as the bursting strength of the specimen.

20.2 When the diaphragm tester is used, mount the specimen between the ring clamp and the base surface with a uniform tension. Apply the pressure at a constant rate as prescribed in 18.3.1 until rupture occurs. Record the pounds pressure and then release the upper clamp completely, allowing the tare of the diaphragm to register on the pressure gage. Report the bursting strength of the material as the gross pressure minus the tare of the diaphragm.

21. Calculation

21.1 The average bursting strength of the material shall be the arithmetic mean of the results of ten tests and reported in pascals or pounds per square inch.

PUNCTURE RESISTANCE

22. Testing Machine

22.1 The apparatus used for determining puncture resistance shall be the tension testing machine with ring clamp described in 18.2, except that the polished steel ball shall be replaced by a piercing instrument shaped like a flared, flat-tip screwdriver, having a width of 7.92 ± 0.25 mm (0.312 ± 0.1 in.) and a thickness of 0.8 ± 0.1 mm (0.031 ± 0.004 in.) at the extreme tip. The piercing tip edges shall be rounded to a 0.25-mm (0.01-in.) radius. The piercing instrument shall be oriented to intercept the warp and fill threads of the mounted specimen at an angle of approximately 45°.

23. Test Specimens

23.1 Five circular specimens shall be cut, each having a diameter at least 12.5 mm (0.5 in.) greater than the outside diameter of the ring-clamp mechanism of the testing machine.

AVA Documents
Document Sharing Hub

Full document details: ASTM D751-00e1

24. Procedure

24.1 Mount each specimen, centering it in the ring clamp. Allow the piercing device to descend at a rate of 300 mm/min (12 in./min) until puncture of the coated fabric occurs. Record the force required to completely penetrate the specimen.

25. Calculation

25.1 The average puncture resistance of the material shall be the arithmetic mean of the results of five tests and reported in newtons or pounds force.

TEARING RESISTANCE

26. Scope

26.1 The tearing strength of the coated fabrics shall be determined by either the pendulum method or the tongue tear method. The tongue tear test method cannot be used for fabric whose yarns bunch up before tearing.

Procedure A—Pendulum Test Method

27. Testing Machine

27.1 Falling-Pendulum (Elmendorf) Type tester[3] wherein the specimen is held between a pair of clamps, one movable and one stationary, and torn by the fall of a pendulum through the force of gravity. The machine shall consist of the following:

27.1.1 Pendulum carrying a circumferential graduated scale so as to indicate the force used in tearing the specimen.

27.1.2 Movable clamp carried on a pendulum, preferably formed by a sector of a wheel or circle free to swing on a ball or other substantially frictionless bearing, and a stationary clamp. The gripping surface of the jaws in each clamp shall be not less than 25 mm (0.98 in.) wide and 16.5 mm (0.650 in.) deep. The clamps shall be separated by a distance of 2.5 mm (0.1 in.).

27.1.3 Pointer and pointer stop to record the maximum arc of swing of the sector pendulum.

27.1.4 Sector release to hold the pendulum in a raised position during the mounting of the specimen and permit it to fall through the force of gravity.

27.1.5 Knife attachment for initial slitting of the specimen.

27.1.6 Newer models of the Elmendorf apparatus may also include equipment for direct digital readout of results.

27.1.7 Detailed information and a drawing of the Elmendorf apparatus can be found in Test Method D 1424.

28. Adjustment of Apparatus

28.1 Level the instrument so that, with the sector free, the line on the sector indicating the vertical from the point of suspension coincides with a corresponding point on the base of the instrument, usually placed on the stop mechanism. For apparatus having a sector as a pendulum, and which tears the specimen as it moves toward the right, draw a pencil line on the base of stop mechanism 25 mm (1 in.) to the right of the edge of the sector stop. With the sector raised to its initial position and the pointer set against its stop, on releasing the sector and holding the stop down, the sector should make at least 20 complete oscillations before the edge of the sector that engages with the stop no longer passes to the left of the pencil line. Otherwise, the bearing shall be oiled and adjusted.

28.2 After leveling, operate the instrument several times with nothing in the jaws, and movable jaw being closed, to ascertain if the pointer registers zero with no load. If zero is not registered, the pointer stop should be suitably adjusted until the zero reading is obtained. If it is necessary to move the pointer stop, the pointer friction should be checked as follows: Set the pointer at the zero reading on the scale before releasing the sector and after release see that the pointer is not pushed more than three scale divisions beyond the zero. A reading of more than three divisions indicates excessive pointer friction and the pointer should be removed, the bearing wiped clean, and a trace of light instrument oil applied. When the pointer friction has been reduced, finally adjust the point stop.

29. Calibration of Apparatus

29.1 Level and adjust the instrument on a smooth, flat surface and clamp a known mass in grams, W, to the radial edge of the sector beneath the jaws. The center of gravity of the mass (including means of attaching) shall be previously marked by a punched dot on the face of the mass that is to be in the front of the instrument.

29.2 Raise and set the sector as for tearing a specimen and, by means of a surface gage or other convenient means, measure the height, H, of the center of gravity of the mass above the glass plate. Then release the sector, allow it to swing, and note the pointer reading. Without touching the pointer, raise the sector until the edge of the pointer just meets with its stop, in which position again determine the height in centimetres, h, of the center of gravity of the mass above the glass plate.

29.3 The work done is $W\ (H - h)$ gram-centimetres. The pointer reading for the standard instrument and test method specified should be as follows:

$$W(H - h)/137.6 \tag{1}$$

29.4 Five forces from 75 to 400 g form a suitable range for the calibration, one or more being clamped on the edge of the sector in different positions, the work done in raising each being calculated and added together.

29.5 Make a record of deviations of the indicated readings and make corresponding corrections in the test results.

29.6 The instrument should be periodically calibrated. Alternate and more rapid calibration procedures, recommended by the manufacturer of the apparatus, using so-called check weights, are also acceptable.

29.7 The tearing distance, which equals 43 mm (1.7 in.) shall be checked before each series of tests.

30. Test Specimen

30.1 The standard test specimen shall be a rectangle of cloth approximately 100 mm (4.00 in.) long and exactly 63 mm (2.50 in.) wide, with the slit to be cut 20 mm (0.8 in.), thus leaving a distance of exactly 43 mm (1.7 in.) between the point

[3] Elmendorf Tear Testers suitable for use and meeting the requirements of this test method are available from Thwing-Albert Instrument Co., 10960 Dutton Rd., Philadelphia, PA 19154 and Testing Machines Inc., 400 Bayview Ave., Amityville, NY 11701.

AVA Documents
Document Sharing Hub

Full document details: ASTM D751-00e1

of the slit and the edge of the specimen. A blade height setting gage, available from the equipment supplier, should be used to verify the slit length.

NOTE 6—Precautionary measures should be taken to prevent or minimize the raveling out of the last yarns and to ensure their being torn during the test. For preparing the specimen, a die or template conforming to Fig. 2 is useful.

31. Procedure

31.1 Place the specimen securely in the clamps. Locate the knife attachment so as to slit the specimen midway between the clamps at right angles to the upper edge of the clamps. Make a slit extending from the bottom edge of the specimen to a point 4 mm (0.157 in.) above the top edge of the clamps leaving a distance of 43 mm (1.7 in.) of uncut specimen perpendicular to the long dimension of the specimen. The accuracy of the readings obtained with the apparatus depends to a great extent on the exactness of this 43 mm of uncut specimen.

31.2 With the pendulum in the raised position, the movable clamps shall lie in the same plane as the fixed clamp forming an extension to the fixed clamp. This plane shall be perpendicular to the plane of oscillation of the pendulum.

31.3 The perpendicular from the line formed by the top edge of the clamps to the axis of suspension shall be 104 mm (4.09 in.) and shall make an angle of 27.5° with the plane of the specimen.

31.4 Press the sector release, causing the sector to fall, thus moving the pendulum clamp away from the fixed clamp so as to tear the specimen. Read from the scale, to the nearest division, the force required to tear the specimen.

31.5 Reject readings obtained where the tear deviates more than 10 mm (0.4 in.) away from the initial slit. Likewise, if the side of the specimen above the movable jaw rubs against the sector as the tear is made, reject the reading.

31.6 The machine, when used for a given specimen, shall be of such capacity that the maximum force required to tear the specimen is not greater than 85 % or less than 15 % of the rated capacity.

31.7 Make not less than five tests in each principal direction of the coated fabric.

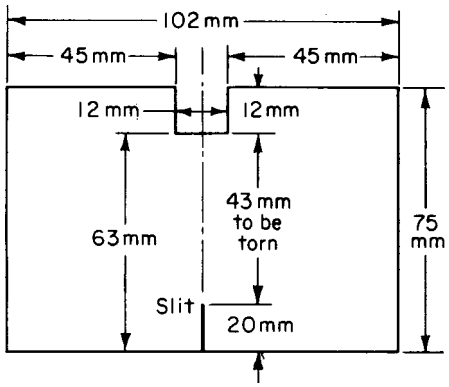

FIG. 2 Dimensions of Die or Template for Cutting Notched Specimens

32. Calculation and Report

32.1 Report the results as the force in newtons or pounds-force required to tear a specimen. If the Elmendorf Tear Tester is used, refer to Table 1 for calculating values in newtons or pounds-force.

32.2 Report the average, maximum and minimum results for both principal directions of the coated fabric. Designate these as longitudinal tear resistance and transverse tear resistance.

Procedure B—Tongue Tear Test Method

33. Testing Machine

33.1 The testing machine used for this test shall conform to the requirements of the machine used in the grab test method for breaking strength (see Section 12) with the following modifications: The face of the jaws shall measure 25 by 50 mm (1 by 2 in.) or more with the long dimension perpendicular to the direction of application of the load. All machine attachments for determining maximum loads shall be disengaged during this test. Unless otherwise specified in the material specification, the machine shall be adjusted so that the pulling clamp shall have a uniform speed of 0.85 ± 0.05 mm/s (2 ± 0.1 in./min).

34. Test Specimen

34.1 The specimen shall be a rectangle of 75- by 200-mm (3- by 8-in.) cloth. Five specimens from each of the warp and filling directions shall be tested. The short distance shall be parallel to the warp yarns for the warp tests and parallel to the filling yarns for the filling tests. No two specimens for warp tests shall contain the same warp yarns, nor shall any two specimens for the filling tests contain the same filling yarns. A 75-mm cut shall be made at the center of and perpendicular to a short side of the specimen forming the tongues or cut strips.

35. Procedure

35.1 The machine, when used for a given specimen, shall be of such capacity that the maximum force required to tear the specimen is not greater than 85 or less than 15 % of the rated capacity.

TABLE 1 Factors for Calculating Tearing Force in Newtons (or Pounds-Force)

NOTE 1—Older models of the apparatus, which have other scales may still be in use. In such instances, the manufacturer's manual should be referenced for the proper conversion factors.

	Scale	Range (units)	Factor (N/unit)	Factor (lbf/unit)
Standard instrument:				
1600-g pendulum	1	0–100	0.157	0.0353
3200-g pendulum	1	0–100	0.314	0.0706
6400-g pendulum	1	0–100	0.627	0.1411
Heavy-duty instrument:				
No augmenting mass—6400 g	1	0–64	0.981	0.220
One augmenting mass—12 800 g	2	0–128	1.961	0.441
Two augmenting masses—25 600 g	3	0–256	1.961	0.441

AVA Documents
Document Sharing Hub

Full document details: ASTM D751-00e1