This international standard was developed in accordance with internationally recognized principles on standardization established in the Decision on Principles for the Development of International Standards, Guides and Recommendations issued by the World Trade Organization Technical Barriers to Trade (TBT) Committee.

Designation: D7525 – 14 (Reapproved 2024)

Standard Test Method for Oxidation Stability of Spark Ignition Fuel—Rapid Small Scale Oxidation Test (RSSOT)[1]

This standard is issued under the fixed designation D7525; the number immediately following the designation indicates the year of original adoption or, in the case of revision, the year of last revision. A number in parentheses indicates the year of last reapproval. A superscript epsilon (ε) indicates an editorial change since the last revision or reapproval.

1. Scope

1.1 This laboratory test method covers the quantitative determination of the stability of spark ignition fuel, including those containing alcohols or other oxygenates, under accelerated oxidation conditions, by an automatic instrument (**Warning—**This test method is not intended for determining the stability of gasoline components, particularly those with a high percentage of low boiling unsaturated compounds, as these can cause explosive conditions with the apparatus.[2])

1.2 This test method measures the induction period, under specified conditions, which can be used as an indication of the oxidation and storage stability of spark ignition fuel.

1.3 The values stated in SI units are to be regarded as standard. No other units of measurement are included in this standard.

1.4 *This standard does not purport to address all of the safety concerns, if any, associated with its use. It is the responsibility of the user of this standard to establish appropriate safety, health, and environmental practices and determine the applicability of regulatory limitations prior to use.*

1.5 *This international standard was developed in accordance with internationally recognized principles on standardization established in the Decision on Principles for the Development of International Standards, Guides and Recommendations issued by the World Trade Organization Technical Barriers to Trade (TBT) Committee.*

2. Referenced Documents

2.1 *ASTM Standards:*[3]

D4057 Practice for Manual Sampling of Petroleum and Petroleum Products

D4177 Practice for Automatic Sampling of Petroleum and Petroleum Products

D6300 Practice for Determination of Precision and Bias Data for Use in Test Methods for Petroleum Products, Liquid Fuels, and Lubricants

3. Terminology

3.1 *Definitions of Terms Specific to This Standard:*

3.1.1 *break point, n*—pressure in the test apparatus, which is 10 % below the maximum pressure of the actual test run.

3.1.2 *induction period, n*—time elapsed between starting the heating procedure of the sample vessel and the break point, measured in minutes.

4. Summary of Test Method

4.1 A 5 mL sample is introduced into a pressure vessel which is then charged with oxygen to 500 kPa at a temperature of 15 °C to 25 °C. The test is initiated by starting the heater and heating the pressure vessel to a temperature of 140 °C.

4.2 The pressure is recorded continuously until the breakpoint is reached. Alternatively, the test may be terminated when a predetermined minimum requirement is reached.

5. Significance and Use

5.1 The induction period may be used as an indication of the oxidation and storage stability of spark ignition fuel.

5.2 Compared to some other oxidation and storage stability test methods, this test method uses a small sample and gives a result in a short time period.

6. Apparatus

6.1 *General*—This test method uses an automatically controlled oxidation tester[4] (Fig. 1) comprising an oxidation pressure vessel containing a test sample cup capable of being

[1] This test method is under the jurisdiction of ASTM Committee D02 on Petroleum Products, Liquid Fuels, and Lubricants and is the direct responsibility of Subcommittee D02.14 on Stability, Cleanliness and Compatibility of Liquid Fuels.

Current edition approved Oct. 1, 2024. Published October 2024. Originally approved in 2009. Last previous edition approved in 2019 as D7525 – 14 (2019)ε1. DOI: 10.1520/D7525-14R24.

[2] Further information can be found in the June 1978, January 1979, and June 1986 editions of the *Institute of Petroleum Review*.

[3] For referenced ASTM standards, visit the ASTM website, www.astm.org, or contact ASTM Customer Service at www.astm.org/contact. For *Annual Book of ASTM Standards* volume information, refer to the standard's Document Summary page on the ASTM website.

[4] The sole source of supply of the apparatus known to the committee at this time is Anton Paar's RapidOxy 100 instrument (formerly PetroOxy), available from Anton Paar ProveTec GmbH, Ludwig-Erhard-Ring 13, 15827 Blankenfelde-Mahlow, Germany, www.anton-paar.com. If you are aware of alternative suppliers, please provide this information to ASTM International Headquarters. Your comments will receive careful consideration at a meeting of the responsible technical committee,[1] which you may attend.

Copyright © ASTM International, 100 Barr Harbor Drive, PO Box C700, West Conshohocken, PA 19428-2959. United States

Documents
Document Sharing Hub
Full document details: ASTM D7525-14(2024)

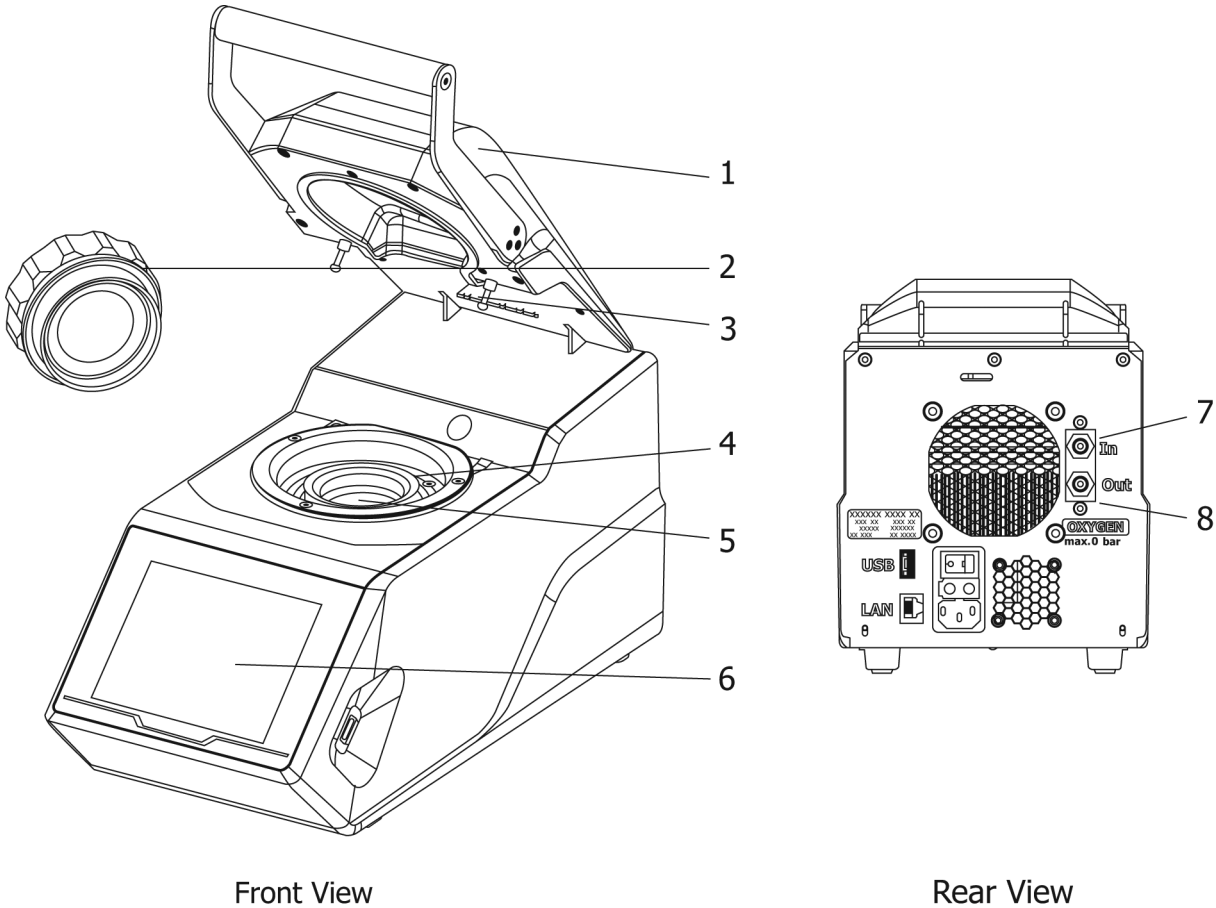

1. Safety and insulating hood
2. Screw cap for closing the test container
3. Locking/unlocking mechanism for insulating hood
4. "O-ring" seal for test sample cup
5. Test sample cup
6. Operating panel with display
7. Oxygen inlet
8. Oxygen outlet

FIG. 1 Schematic of Apparatus for Rapid Small Scale Oxidation Test

rapidly heated, fitted with a pressure sensor capable of measuring pressures up to 2000 kPa and a temperature sensor capable of reading to 0.1 °C. Pressure and temperature in the oxidation vessel are recorded continuously during the test. The oxidation pressure vessel is fitted with filling and relief valves and a means of automatically releasing the pressure at the end of the test. The integrated cooling fan cools the pressure vessel from the test temperature to ambient temperature by a flow of air. See Annex A1 for detailed information.

6.2 *Volumetric Device,* clean and free from contaminations of previous samples, capable of delivering 5.0 mL ± 0.1 mL.

6.3 *Temperature Calibration Equipment,* comprising a cover and a temperature calibration sensor (Fig. 2). The temperature calibration sensor is fixed to a depth of 15 mm ± 0.5 mm. The temperature calibration sensor, calibrated to the nearest 0.1 °C, is calibrated by an approved calibration service, such as one that is traceable to the National Institute of Standards and Technology (NIST) or to a national authority in the country in which the equipment is used or manufactured.

6.4 *Pressure Calibration Equipment,* comprising a pressure calibration sensor (Fig. 3). The pressure calibration senor is calibrated to the nearest 10 kPa, by an approved calibration service, such as one that is traceable to the National Institute of Standards and Technology (NIST) or to a national authority in the country in which the equipment is used or manufactured.

7. Reagents and Materials

7.1 Solvent for the removal of oxidation residues from the test vessel. The solvent shall be of suitable purity to leave no residue on the apparatus. Ethanol of 94 % minimum purity has been found to be suitable. Other solvents, such as a mixture of equal volumes of toluene and acetone, may be used if shown to meet the requirements for the removal of oxidation residues from the test vessel without leaving any residue in the sample test cup.

7.2 *Oxygen*—Commercially available extra-dry oxygen of not less than 99.6 % purity.

AVA Documents
Document Sharing Hub

Full document details: ASTM D7525-14(2024)

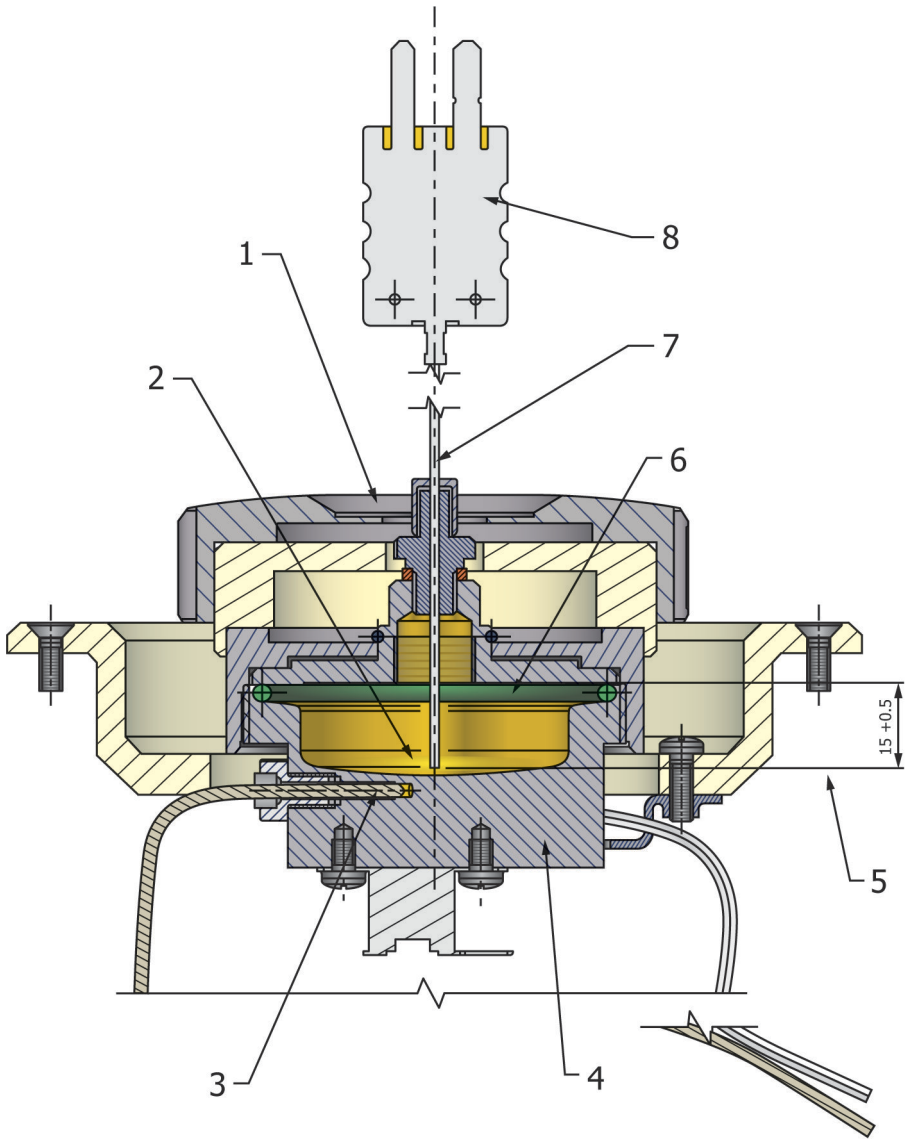

1. Calibration cover with duct for temperature calibration sensor
2. Calibration fluid
3. Temperature sensor for block temperature
4. Heating block
5. Immersion depth of temperature calibration sensor and bottom of calibration cover
6. Seal
7. Temperature calibration sensor
8. Connector plug to measuring device

FIG. 2 Temperature Calibration Equipment

7.3 *Lint-Free Cleaning Tissue*—For sensitive surfaces; that will not scratch the surface.

7.4 *"O-ring" Seal*—See A1.2.

7.5 *Temperature Calibration Fluid*—Stable middle distillate fuel liquid with flash point above +60 °C and boiling-point above +150 °C.

8. Hazards

8.1 (**Warning—**To provide protection against possible explosive rupture of the pressure vessel and hazards relating to hot and flammable fuels, the apparatus shall be operated behind an appropriate safety shield.)

9. Sampling

9.1 Sample in accordance with Practices D4057 or D4177.

10. Preparation of Apparatus

10.1 Remove the previous sample by means of a pipette or similar device.

10.2 Remove the used "O-ring" seal and discard.

AVA Documents
Document Sharing Hub

Full document details: ASTM D7525-14(2024)