This international standard was developed in accordance with internationally recognized principles on standardization established in the Decision on Principles for the Development of International Standards, Guides and Recommendations issued by the World Trade Organization Technical Barriers to Trade (TBT) Committee.

Designation: D7754 – 23

Standard Test Method for Determination of Trace Oxygenates in Automotive Spark-Ignition Engine Fuel by Multidimensional Gas Chromatography[1]

This standard is issued under the fixed designation D7754; the number immediately following the designation indicates the year of original adoption or, in the case of revision, the year of last revision. A number in parentheses indicates the year of last reapproval. A superscript epsilon (ε) indicates an editorial change since the last revision or reapproval.

1. Scope*

1.1 This test method covers the determination of trace oxygenates in automotive spark-ignition engine fuel. The method used is a multidimensional gas chromatographic method using 1,2-dimethoxy ethane as the internal standard. The oxygenates that are analyzed are: methyl-tertiary butyl ether (MTBE), ethyl-tertiary butyl ether (ETBE), diisopropyl ether (DIPE), methanol, tertiary-amyl methyl ether (TAME), n-propanol, i-propanol, n-butanol, i-butanol, tert-butyl alcohol, sec-butyl alcohol, and tert-pentanol. Ethanol is usually not measured as a trace oxygenate since ethanol can be used as the main oxygenate compound in finished automotive spark-ignition fuels such as reformulated automotive spark-ignition fuels. The concentration range of the oxygenates covered in the ILS study was from 10 mg⁄kg to 2000 mg⁄kg. In addition this method is also suitable for the measurement of the C5 isomeric alcohols (2-methyl-1-butanol, 2-methyl-2-butanol) present from the fermentation of ethanol.

1.2 The ethanol blending concentration for which this test method applies ranges from 1 % to 15% by volume. Higher concentrations of ethanol coelute with methanol in the analytical column. Lower levels of ethanol, similar to the other oxygenate, can be calibrated and analyzed also. If higher ethanol concentrations are expected, the window cutting technique can be used to avoid ethanol from entering the analytical column and interfere with the determination of the other oxygenates of interest. Refer to Appendix X1 for details.

1.3 The values stated in SI units are to be regarded as standard. No other units of measurement are included in this standard.

1.3.1 Alternative units, in common usage, are also provided to increase clarity and aid the users of this test method.

1.4 *This standard does not purport to address all of the safety concerns, if any, associated with its use. It is the responsibility of the user of this standard to establish appropriate safety, health, and environmental practices and determine the applicability of regulatory limitations prior to use.*

1.5 *This international standard was developed in accordance with internationally recognized principles on standardization established in the Decision on Principles for the Development of International Standards, Guides and Recommendations issued by the World Trade Organization Technical Barriers to Trade (TBT) Committee.*

2. Referenced Documents

2.1 *ASTM Standards:*[2]

D4057 Practice for Manual Sampling of Petroleum and Petroleum Products

D4175 Terminology Relating to Petroleum Products, Liquid Fuels, and Lubricants

D4307 Practice for Preparation of Liquid Blends for Use as Analytical Standards

D4815 Test Method for Determination of MTBE, ETBE, TAME, DIPE, tertiary-Amyl Alcohol and C_1 to C_4 Alcohols in Gasoline by Gas Chromatography

D6304 Test Method for Determination of Water in Petroleum Products, Lubricating Oils, and Additives by Coulometric Karl Fischer Titration

E355 Practice for Gas Chromatography Terms and Relationships

3. Terminology

3.1 *Definitions:*

3.1.1 This test method makes reference to common gas chromatographic procedures, terms, and relationships. Detailed definitions of these can be found in Practice E355 or Terminology D4175, or both.

3.2 *Definitions of Terms Specific to This Standard:*

3.2.1 *electronic pressure control, n*—electronic pneumatic control of carrier gas flows. Can be flow or pressure programmed to speed up elution of components.

[1] This test method is under the jurisdiction of ASTM Committee D02 on Petroleum Products, Liquid Fuels, and Lubricants and is the direct responsibility of Subcommittee D02.04.0L on Gas Chromatography Methods.

Current edition approved Nov. 1, 2023. Published November 2023. Originally approved in 2011. Last previous edition approved in 2019 as D7754 – 19. DOI:10.1520/D7754-23.

[2] For referenced ASTM standards, visit the ASTM website, www.astm.org, or contact ASTM Customer Service at service@astm.org. For *Annual Book of ASTM Standards* volume information, refer to the standard's Document Summary page on the ASTM website.

*A Summary of Changes section appears at the end of this standard

Copyright © ASTM International, 100 Barr Harbor Drive, PO Box C700, West Conshohocken, PA 19428-2959. United States

Documents
Document Sharing Hub
Full document details: ASTM D7754-23

3.2.2 *flame ionization detector (FID), n*—detector used to analyze the components eluting from the column.

3.2.3 *fluidic switch, n*—device that reverses the directional flow in a union T altering the pressure at the midpoint. In its simplest design it is also known as a Dean Switch.

3.2.4 *inlet, n*—capillary split/splitless inlet system operated in the split mode is recommended. Operate the inlet within its linear range.

3.2.4.1 *split ratio, n— in capillary gas chromatography*, the ratio of the total flow of carrier gas to the sample inlet versus the flow of the carrier gas to the capillary column is expressed by:

$$\text{Split ratio} = (S+C)/C \quad (1)$$

where:

S = flow rate at the splitter vent, and
C = flow rate at the column outlet.

3.2.5 *low volume connector, n*—special union for connecting two lengths of tubing 1.6 mm inside diameter and smaller. Sometimes this is referred to as zero dead volume union.

3.2.6 *multidimensional gas chromatography, n*—gas chromatographic technique where using hardware (valves, pressure switches, etc.) in which selected components from one column (primary column) are transferred to a secondary column differing in characteristics (film thickness, polarity, capacity, etc.) from the first column.

3.2.7 *WCOT column, n*—wall-coated open tubular, a type of capillary gas chromatographic column prepared by coating the inside of the capillary wall with a specified thin film of stationary phase. The coatings used are either 100 % polydimethyl siloxane or 5 % phenyl-polydimethylsiloxane.

3.2.7.1 *apolar column, n*—polydimethylsiloxane nonpolar column used as a pre-column.

3.2.7.2 *PLOT column-oxygen selective, n*—porous-layer open tubular which is an oxygenate selective capillary gas-solid chromatographic column. It is used as an analytical column.

4. Summary of Test Method

4.1 An appropriate internal standard of a product that is not present in refinery streams, such as 1,2-dimethoxy ethane (1,2-DME), is added to the sample, which is then introduced into a gas chromatograph equipped with two columns and a 4-port switching valve. The sample first passes onto an apolar (non-polar) polydimethylsiloxane WCOT column that performs a pre-separation of the trace oxygenates and elutes unwanted high boiling hydrocarbons to vent. The oxygenates and the DME are transferred to the analytical oxygen selective column by the switching valve. While the oxygenates and the DME are eluting from the analytical column, the inlet's carrier gas is used to elute the hydrocarbons from the pre-column to yield a stable baseline for the next analysis. The auxiliary pressure controller is used to provide carrier gas to the analytical column during the analysis.

4.2 The eluted components Table 1 are detected by one or two flame ionization detectors. In the single detector Configuration A (Fig. 1), only the components eluting from the analytical column are analyzed. In the two detector Configuration B (Fig. 2), detector one is used to monitor the apolar elution and aid in setting "heart-cut" times for specific oxygenates while the second detector is used to monitor the analytical column elution and also for the quantitation of the oxygenates. The second detector response is proportional to the oxygenates and DME components concentration. The signal is recorded, the peak areas are measured, and the concentration of each oxygenate is calculated with reference to the internal standard.

4.3 Alternatively, a fluidic switching system, Configuration C (Figs. 3 and 4) may be used instead of valve switching. In this system, the two columns are joined by a zero dead volume (ZDV) tee purged by an auxiliary carrier source. At injection, the auxiliary flow is low, and the inlet flow is sufficient so that at the midpoint where the two columns join, the flow is the required flow to transfer the oxygenates to the PLOT column. Thus, there is forward flow through the pre-column and the analytical column. Once the oxygenates have passed through to

TABLE 1 Component List with Retention and Calibration Characteristics for WCOT/PLOT Column Set Using Conditions of Table 2[A]

Component	RT (min)	Mol Wt	BP (°C)	Slope	y-Int	Corr. Coef.
ETBE	12.7	102.2	70 to 72	1.919	–0.02	0.999
MTBE	12.8	88.2	55 to 56	1.689	0.01	0.999
DIPE	12.9	102.2	68 to 69	2.124	–0.06	0.999
TAME	13.6	102.2	85 to 86	2.023	–0.02	0.999
Methanol	15.6	32.0	65	0.779	–0.09	0.997
Ethanol	18.7	46.1	78	1.352	0.19	0.999
iso-Propanol	22.2	60.1	81 to 83	1.504	–0.06	0.999
n-Propanol	22.2	60.1	97	...	...	...
t-Butanol	23.8	74.1	82	1.951	–0.12	0.999
s-Butanol	23.8	74.1	98	...	...	...
iso-Butanol	23.8	74.1	117	...	...	...
n-Butanol	24.4	74.1	118	1.906	–0.05	0.999
tert-Pentanol	25.1	88.1	102	2.148	–0.04	0.998
1,2-DME	26.0	90.1	85	...	...	...

[A] For coeluting compounds the response is assigned to the first peak listed. Values may be different for different instruments.

AVA Documents
Document Sharing Hub

Full document details: ASTM D7754-23

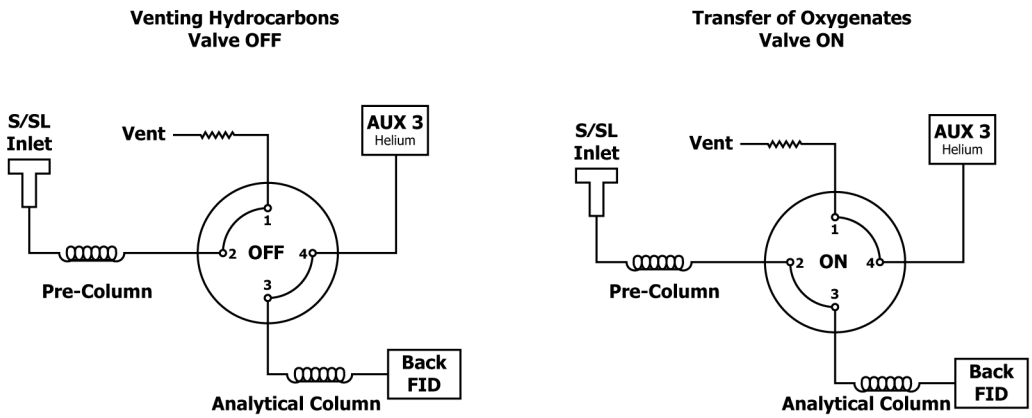

FIG. 1 Schematic of Chromatographic System—Configuration A

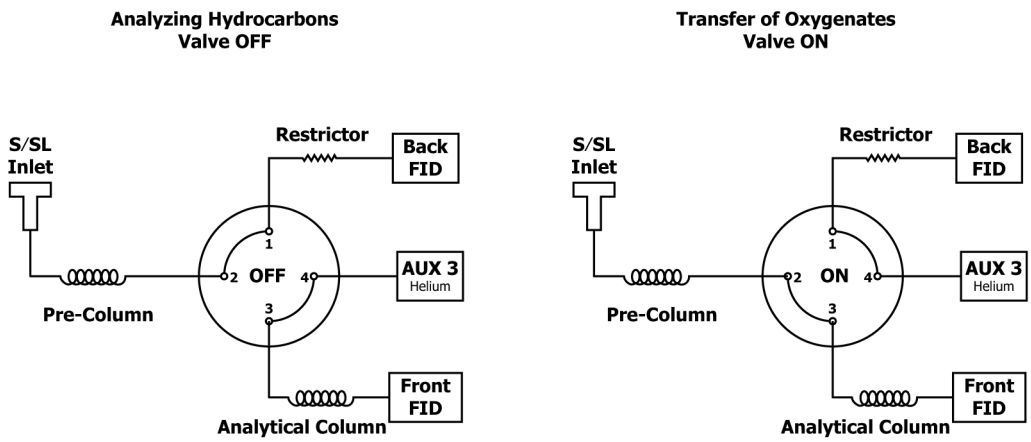

FIG. 2 Schematic of Chromatographic System—Configuration B

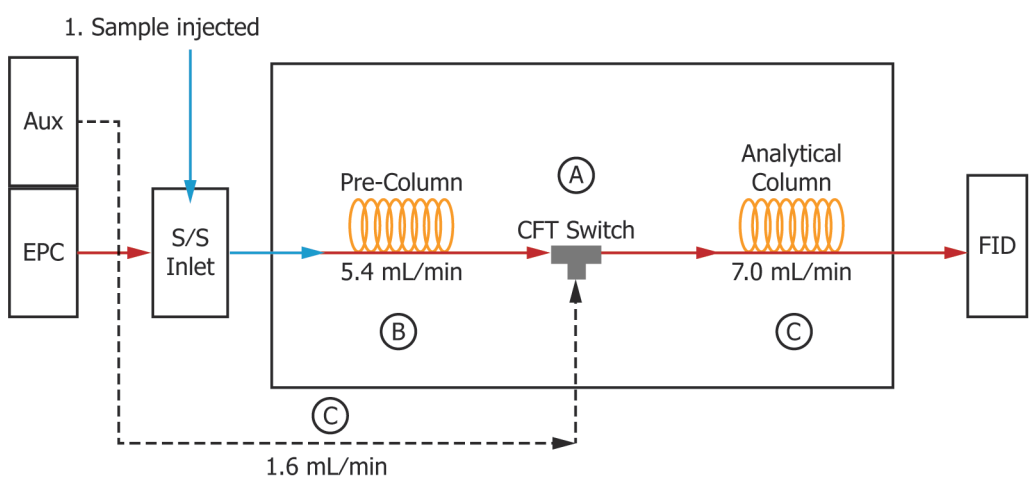

FIG. 3 Fluidic Switch Schematic—Oxygenate Transfer

the analytical column, the inlet flow is decreased and the auxiliary flow is increased, which results in backflushing the pre-column through the split vent of the front inlet while the analytical column continues the separation.

5. Significance and Use

5.1 The analysis of trace oxygenates in automotive spark-ignition engine fuel has become routine in certain areas to ensure compliance whenever oxygenated fuels are used. In addition, test methods to measure trace levels of oxygenates in automotive spark-ignition fuel are necessary to assess product quality.

6. Apparatus

6.1 *Chromatograph*—A multidimensional gas chromatographic system, which is able to adequately resolve oxygenates

AVA Documents
Document Sharing Hub

Full document details: ASTM D7754-23

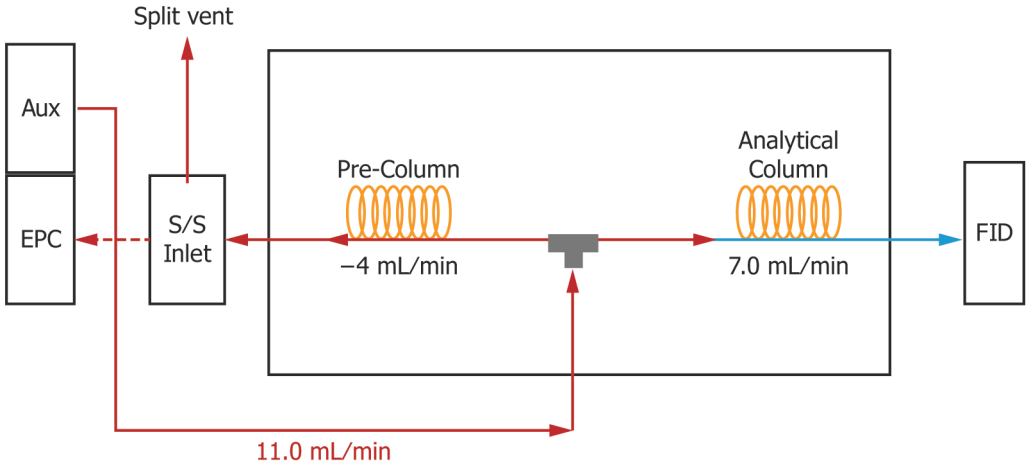

FIG. 4 Fluidic Switch Schematic—Pre-column Backflush

and an internal standard and to eliminate hydrocarbon, as well as other interferences, is used for these analyses. The instrument is to be configured to operate using the approximate conditions listed in Table 2. The system requires a column switching mechanism equivalent to Fig. 1 or Fig. 2 if using a valve system. If using a fluidic system then the fluidic switch and auxiliary flow control are required as shown in Fig. 3 and Fig. 4. Carrier gas flow controllers (EPC) shall be capable of precise control where the flow rates are low. Pressure control devices and gages shall be capable of precise control for the typical pressures required.

6.1.1 *Detector*—Two-flame ionization detectors are preferably used (Configuration B), although the analysis can be performed using only one detector (Configuration A and C).

TABLE 2 Chromatographic Conditions

Configuration	Switching Valve	Fluidic Switch
Carrier Gas	Helium	Helium
Injection Volume	1.0 µL	1.0 µL
Inlet:	Split/Splitless (Split mode)	Split/Splitless (Split mode)
Temperature	250 °C	250 °C
Split Ratio	10:1	10:1
Pressure[A]	51.7 kPa, Constant Pressure	17.8 kPa, Flow Program Mode
Columns and Flows		
Pre-column	30 m by 0.53 mm by 5.0 µm PDMS 7.5 mL/min @ 60 °C	15 m by 0.53 mm by 1.5 µm 5 % phenyl PDMS Initial Flow: 5.4 mL/min @ 60 °C Hold for 1.5 min Ramp: 90 mL/min to -5 mL/min Hold until end of run
Analytical Column	10 m by 0.53 mm by 10 µm Oxygen Selective 7.5 mL/min@ 60 °C	10 m by 0.53 mm by 10 µm Oxygen Selective 7.0 mL/min constant flow
Oven:		
Initial Temperature	60 °C	60 °C
Initial Hold	6.0 min	6.0 min
Ramp 1	10 °C/min	10 °C/min
Final Temperature	150 °C	150 °C
Final Hold	5.0 min	5.0 min
Ramp 2	10 °C/min	10 °C/min
Final Temperature	220 °C	220 °C
Final Hold	3.0 min	3.0 min
Total Time	30 min	30 min
Detector:	FID	FID
Temperature	275 °C	275 °C
Hydrogen	40 mL/min	40 mL/min
Air	450 mL/min	450 mL/min
Make-up (N2)	10 mL/min	10 mL/min
Valve Temperature	150 °C	N/A
Auxiliary Pressure	73.1 kPa	10.3 kPa
Vent Restrictor	76 cm in length 0.16 cm (O.D.) and 0.25 mm (I.D.) SS	N/A
Default Valve Times (for complete analysis):		
Initial	OFF	N/A
0.50 min	ON	N/A
4.50 min	OFF	N/A

[A] For Configuration A valve timing determination, 9.2, set the inlet pressure to 34.5 kPa.

AVA Documents
Document Sharing Hub

Full document details: ASTM D7754-23

The system shall have sufficient sensitivity and stability to obtain a signal-to-noise ratio of at least 5 to 1 for a 1 mg/kg concentration of any oxygenate. In the fluidic system only one detector is used.

6.1.2 *Switching Valve*—A switching valve, to be located within the gas chromatographic column oven or separate oven, capable of performing the functions described in 9.2 and illustrated in Fig. 1. The valve shall be of low volume design and not contribute significantly to chromatographic deterioration. Alternatively a Deans switching arrangement can also be used as shown in Fig. 3 and Fig. 4.

6.1.2.1 A commercially available valve: 1.6 mm fittings, 0.75 mm ports was used in the method development. An equivalent valve may be used.

6.1.2.2 *Fluidic Switch,* as an option to the two-position switching valve. See 4.3, Table 2, and Figs. 3 and 4 for a description. Additional flow source is required as well as hardware, which is located in the oven for the column connection.

6.1.2.3 Some gas chromatographs are equipped with an auxiliary oven, which can be used to contain the valve at an isothermal temperature. In such a configuration, the two capillary columns are located in the main oven and connected to the valve by using low dead volume and inert stainless steel tubing terminated in the GC oven.

6.1.2.4 An automatic valve switching device is used to ensure repeatable switching times. Such a device is synchronized with injection and data collection times. For the pressure switching approach, automatic precise and stable pressure control shall be used. Fluidic systems require both a fluidic switch and a programmable auxiliary pressure source to maintain and program flows.

6.1.3 *Injection System*—The chromatograph is to be equipped with a heated splitting-type inlet device containing a replaceable glass deactivated liner (single-taper style) with deactivated glass wool at the bottom to retain non-vaporized components). Split injection is necessary to maintain the actual chromatographed sample size within the limits of column and detector efficiency and linearity.

6.1.3.1 A microliter automatic syringe injector is used for introducing representative samples into the gas chromatographic inlet and for adequate repeatability.

6.2 *Data Acquisition System:*

6.2.1 *Computer*—A data acquisition system containing a computer and data acquisition software is required.

6.2.2 *Integrator*—Alternatively, an integrator can be used to measure peak areas and to perform the analytical calculations.

6.3 *Column Class:*

6.3.1 *Apolar (Non-polar) Pre-Column*—This column performs a pre-separation of the oxygenates and internal standard from hydrocarbons in the same boiling point range. Unless a separate auxiliary oven is provided for it, the apolar column shall perform at the same temperature as the polar column does.

6.3.1.1 *WCOT Methyl Silicone Pre-Column*—30 m long by 0.53 mm inside diameter fused silica column with a 5 µm film thickness of cross-linked polydimethylsiloxane. With fluidic switch (Configuration C) a 30 m long by 0.53 mm with a 1.5 µm 5 % phenyl polydimethyl siloxane is recommended.

6.3.2 *Polar Analytical Column*—Any column with equivalent or better chromatographic efficiency and selectivity to that described in 6.3.1 and which separation efficiency is illustrated in Figs. 5 and 6 can be used.

6.3.2.1 *LowOx or GS OxyPLOT Polar Analytical Column*—10 m long by 0.53 mm inside diameter fused silica PLOT column with a 10 µm film thickness. These columns were used

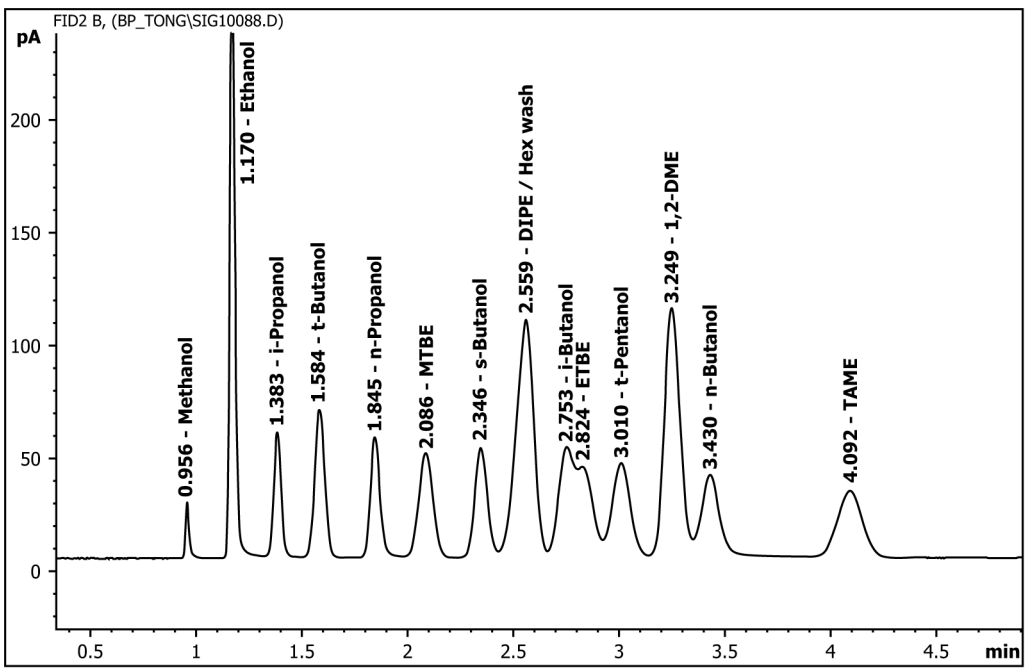

FIG. 5 Oxygenate Elution Pattern, from WCOT Pre-column Only

Documents
Document Sharing Hub

Full document details: ASTM D7754-23

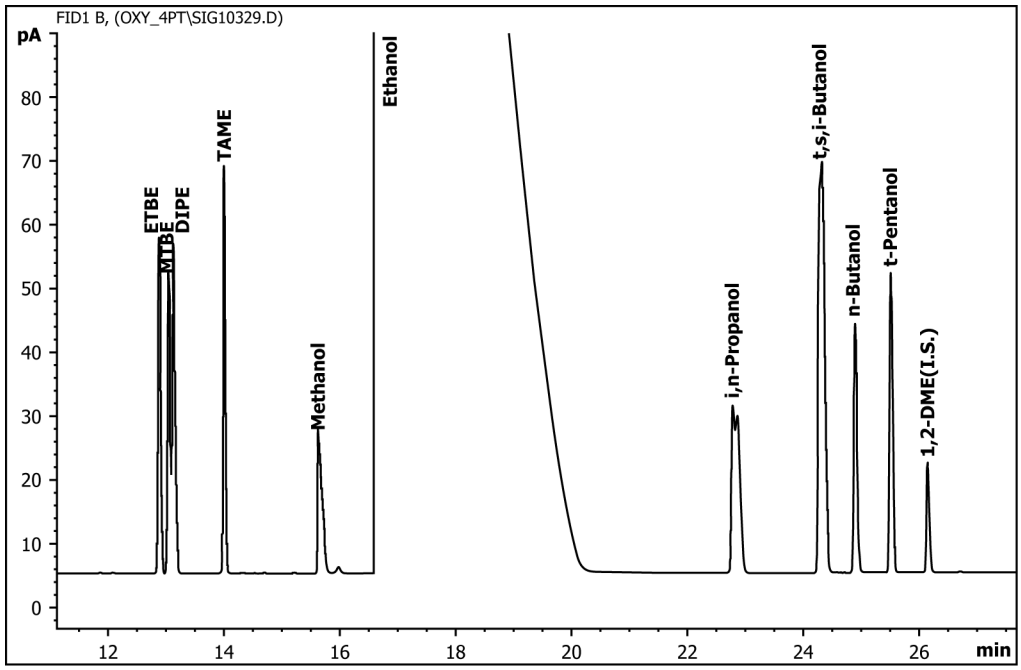

NOTE 1—Calibration Standard—250 mg/kg oxygenates, 7.5 % ethanol, and 200 mg/kg internal standard in *iso*octane.

FIG. 6 Oxygenate Elution Pattern from WCOT/PLOT Column Set Using Conditions in Table 2

in the method development to provide the precision and bias data referred to in Section 14.

7. Reagents and Materials

7.1 *Gases:*

7.1.1 Helium, carrier gas, a minimum purity of 99.995 % is required. Oxygen scrubbers are recommended to safeguard the WCOT columns.

7.1.2 For the FID, hydrogen (99.9995 % with air as the remainder) and nitrogen (99.995 %, as make up) are used. (**Warning—**Observe high pressure precautions with all compressed gases. Observe flammable gas precautions with hydrogen.)

7.2 *Standards for Calibration and Identification*—Standards of oxygenates and the internal standard are required for establishing identification by retention time as well as calibration for quantitative analysis. These materials shall be of known purity and free of the other components to be analyzed. (**Warning—**These materials are flammable and can be harmful or fatal if ingested or inhaled.). The following oxygenates: ethanol, methyl-tertiary butyl ether (MTBE), ethyl-tertiary butyl ether (ETBE), diisopropyl ether (DIPE), methanol, tertiary-amyl methyl ether (TAME), n-propanol, i-propanol, n-butanol, i-butanol, tert-butyl alcohol, sec-butyl alcohol, and tert-pentanol are to be used with the highest purity available (98 % to 99 %). Ethanol is usually not measured as a trace sample component.

7.3 iso*octane, or 2,2,4-Trimethylpentane*—Used for preparation of calibration standards and dilution of automotive spark-ignition fuel samples. In some cases, cyclohexane may be used provided it meets all of the requirements of the method. Using cyclohexane, since it elutes in the cut window of the oxygenates, may cause difficulty in finding individual cut times (see Appendix X1). (**Warning—***iso*octane and cyclohexane are flammable and may be harmful if inhaled. High concentrations may cause unconsciousness or death).

7.4 *1,2-Dimethoxyethane (1,2-DME or ethylene glycol dimethyl ether)*—Used as the internal standard. Use Reagent or Chromatography grade.

8. Sampling

8.1 Every effort should be made to ensure that the sample is representative of the finished automotive spark-ignition fuel from which it is taken. The use of multiple samples that are mixed or composite sampling is recommended. The use of epoxy-lined cans are recommended for storage or shipping of the sample, or both. Follow the recommendations of Practice D4057, when obtaining samples from bulk storage or pipelines. Samples that contain free layer of water will require special treatment. For the latter samples, it may be necessary to separate and analyze the water and hydrocarbon phases separately. The water phase may be determined from a separate method. For such analysis, it is necessary to know the amount of water and hydrocarbon phases to determine a total methanol content for the sample.

8.2 Prior to analysis, allow the sample container as received to equilibrate to ambient temperature.

9. Preparation of Apparatus and Establishment of Conditions

9.1 *Determine Configuration*—Refer to 4.2 to determine which configuration the chromatographic system is designed for the analysis. For a valve configuration the dual detector Configuration B (Fig. 2) is recommended due to the fact that the system can be assembled with no modifications to determine the cut times from the pre-column.

AVA Documents
Document Sharing Hub

Full document details: ASTM D7754-23