This international standard was developed in accordance with internationally recognized principles on standardization established in the Decision on Principles for the Development of International Standards, Guides and Recommendations issued by the World Trade Organization Technical Barriers to Trade (TBT) Committee.

Designation: D8044 – 23

Standard Test Method for Evaluation of Asphalt Mixture Cracking Resistance Using the Semi-Circular Bend Test (SCB) at Intermediate Temperatures[1]

This standard is issued under the fixed designation D8044; the number immediately following the designation indicates the year of original adoption or, in the case of revision, the year of last revision. A number in parentheses indicates the year of last reapproval. A superscript epsilon (ε) indicates an editorial change since the last revision or reapproval.

1. Scope

1.1 This test method covers the procedures for preparation, testing, and measurement of asphalt mixture cracking resistance at intermediate temperatures using semi-circular bend (SCB) geometry of laboratory-prepared or pavement core asphalt mixture samples tested monotonically. The SCB sample is a half-disk with a notch cut aligned vertically in parallel with the testing loading. The test method describes the determination of the critical strain energy release rate parameter, J_c, and other parameters determined from the load-displacement curve. These parameters can be used to rank the resistance of asphalt mixtures to cracking.

1.2 The text of this standard references notes and footnotes which provide explanatory material. These notes and footnotes (excluding those in tables and figures) shall not be considered as requirements of the standard.

1.3 The values stated in SI units are to be regarded as standard. No other units of measurement are included in this standard.

1.4 Since a complete Precision and Bias statement for this standard has not been developed, the test method is to be used for research and informational purposes only. Therefore, this standard should not be used for acceptance or rejection of a material for purchasing purposes.

1.5 *This standard does not purport to address all of the safety concerns, if any, associated with its use. It is the responsibility of the user of this standard to establish appropriate safety, health, and environmental practices and determine the applicability of regulatory limitations prior to use.*

1.6 *This international standard was developed in accordance with internationally recognized principles on standardization established in the Decision on Principles for the Development of International Standards, Guides and Recommendations issued by the World Trade Organization Technical Barriers to Trade (TBT) Committee.*

2. Referenced Documents

2.1 *ASTM Standards:*[2]

D979/D979M Practice for Sampling Asphalt Mixtures
D2041/D2041M Test Method for Theoretical Maximum Specific Gravity and Density of Asphalt Mixtures
D2726/D2726M Test Method for Bulk Specific Gravity and Density of Non-Absorptive Compacted Asphalt Mixtures
D3203/D3203M Test Method for Percent Air Voids in Compacted Asphalt Mixtures
D3666 Specification for Minimum Requirements for Agencies Testing and Inspecting Road and Paving Materials
D5361/D5361M Practice for Sampling Compacted Asphalt Mixtures for Laboratory Testing
D6373 Specification for Performance-Graded Asphalt Binder
D6857/D6857M Test Method for Maximum Specific Gravity and Density of Asphalt Mixtures Using Automatic Vacuum Sealing Method
D6925 Test Method for Preparation and Determination of the Relative Density of Asphalt Mix Specimens by Means of the Superpave Gyratory Compactor
E4 Practices for Force Calibration and Verification of Testing Machines
E29 Practice for Using Significant Digits in Test Data to Determine Conformance with Specifications
E178 Practice for Dealing With Outlying Observations
E399 Test Method for Linear-Elastic Plane-Strain Fracture Toughness of Metallic Materials
E2309/E2309M Practices for Verification of Displacement Measuring Systems and Devices Used in Material Testing Machines
E3029 Practice for Determining Relative Spectral Correction Factors for Emission Signal of Fluorescence Spectrometers

[1] This test method is under the jurisdiction of ASTM Committee D04 on Road and Paving Materials and is the direct responsibility of Subcommittee D04.26 on Fundamental/Mechanistic Tests.

Current edition approved May 15, 2023. Published May 2023. Originally approved in 2016. Last previous edition approved in 2016 as D8044 – 16. DOI: 10.1520/D8044-23.

[2] For referenced ASTM standards, visit the ASTM website, www.astm.org, or contact ASTM Customer Service at service@astm.org. For *Annual Book of ASTM Standards* volume information, refer to the standard's Document Summary page on the ASTM website.

Copyright © ASTM International, 100 Barr Harbor Drive, PO Box C700, West Conshohocken, PA 19428-2959. United States

Documents
Document Sharing Hub
Full document details: ASTM D8044-23

2.2 *AASHTO Standards:*[3]

R 30 Practice for Mixture Conditioning of Hot Mix Asphalt (HMA)

M 320 Standard Specification for Performance-Graded Asphalt Binder

M 332 Standard Specification for Performance-Graded Using Multiple Stress Creep Recovery (MSCR) Test

3. Terminology

3.1 *Definitions:*

3.1.1 J_c—critical strain energy release rate (kJ/m^2), value used to evaluate mixture resistance to cracking.

3.1.2 *U*—strain energy to failure (kJ) is the area under the loading portion of the load versus deflection curves, up to the maximum load measured for each notch depth.

4. Summary of Test Method

4.1 A semi-circular specimen is loaded monotonically until fracture failure occurs under a constant rate of deformation in a three-point bending load configuration. The load and deformation are continuously recorded and are used to compute the strain energy for a given notch depth. The test is repeated at multiple notch depths to compute the critical strain energy release rate parameter, J_c. High J_c values are desirable for fracture-resistant mixtures. A minimum J_c value ranging from 0.50 to 0.60 kJ/m^2 is typically recommended to ensure adequate fracture resistance of the mixture.

4.2 This test procedure considers the elasto-plastic/visco-elastic relationship of asphalt mixtures and fracture mechanics (Mull et al., 2006; Anderson, 2005; and suggested by Wu et al., 2005).

5. Significance and Use

5.1 The critical strain energy release rate parameter, J_c, is used to compare the cracking resistance of asphalt mixtures prepared with different asphalt binder and aggregate types prepared to meet the volumetric requirements of differing traffic levels tested at intermediate temperatures.

5.2 The critical strain energy release rate parameter, J_c, is an engineering property and a performance indicator at intermediate temperature cracking.

NOTE 1—The quality of the results produced by this standard are dependent on the competence of the personnel performing the procedure and the capability, calibration, and maintenance of the equipment used. Agencies that meet the criteria of Specification D3666 are generally considered capable of competent and objective testing, sampling, inspection, etc. Users of this standard are cautioned that compliance with Specification D3666 alone does not completely ensure reliable results. Reliable results depend on many factors; following the suggestions of Specification D3666 or some similar acceptable guideline provides a means of evaluating and controlling some of those factors.

6. Apparatus

6.1 *Load Test System*—A load test system consisting of an axial loading device, environmental chamber, and control and data acquisition system. The test system shall meet the minimum requirements specified in Table 1. (See Practices E2309/E2309M.)

6.1.1 *Axial Loading Device*—The load apparatus shall be capable of maintaining a constant deformation rate of 0.5 ± 0.02 mm/min.

6.1.2 *Environmental Chamber*—A chamber capable of maintaining ±0.5 °C of the climatic intermediate temperature calculated in 8.4.

6.1.3 *Control and Data Acquisition System*—The system shall include a data acquisition system comprising analog to digital conversion or digital input, or both, for storage and analysis on a computer. The system shall be capable of measuring and recording three signals during the test including load, displacement, and chamber temperature at a sampling rate of 10 Hz. The minimum resolution of the measurements is provided in Table 1.

6.2 *Measurement Devices:*

6.2.1 *Load Measuring Device*—The load measuring device shall consist of an electronic load cell, designed for placement between the load platen and piston, with the minimum capacity and sensitivity stated in Table 1. The load cell shall be calibrated in accordance with Practices E4.

6.2.2 *Axial Deformations*—Axial deformations shall be measured with linear variable differential transformers (LVDTs) or other devices capable of measuring displacement within the range and tolerance provided in Table 1. The LVDT shall be calibrated in accordance with Practice E3029, Class B.

6.2.3 *Temperature*—Chamber temperature shall be measured with Resistance Temperature Detectors (RTDs) or other suitable devices accurate to within ±0.5 °C.

6.3 *Gyratory Compactor*—A gyratory compactor and associated equipment for preparing laboratory specimens in accordance with Test Method D6925 shall be used.

6.4 *Saw*—The saw shall be capable of producing three different notch sizes ranging from 0 to 50 mm. The width of the saw blade shall be <3.5 mm.

6.5 *Test Fixture*—The loading frame shall consist of a loading rod and two sample support rods. The schematic of the test apparatus is shown in Fig. 1. The diameters of the loading and supports rods shall be 25 mm and the anvil span shall be 127 mm.

6.6 *Reaction Surface Treatment*—Polytetrafluoroethylene (PTFE) strips are used to reduce friction between the specimen and the lower two support rollers.

TABLE 1 Test System Minimum Requirements

Measurement	Range	Accuracy
Load Measurement and Control	0 to 10 kN	±1 %
Displacement Measurement and Control	0 to 30 mm	±0.5 %
Temperature Measurement and Control Range	5 to 35 °C	±0.5 °C

[3] Available from American Association of State Highway and Transportation Officials (AASHTO), 444 N. Capitol St., NW, Suite 249, Washington, DC 20001, http://www.transportation.org.

AVA Documents
Document Sharing Hub

Full document details: ASTM D8044-23

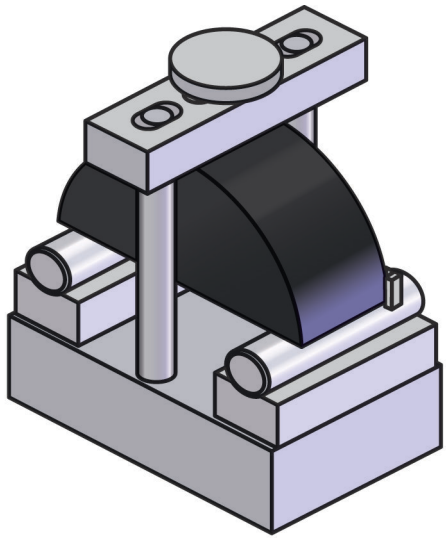

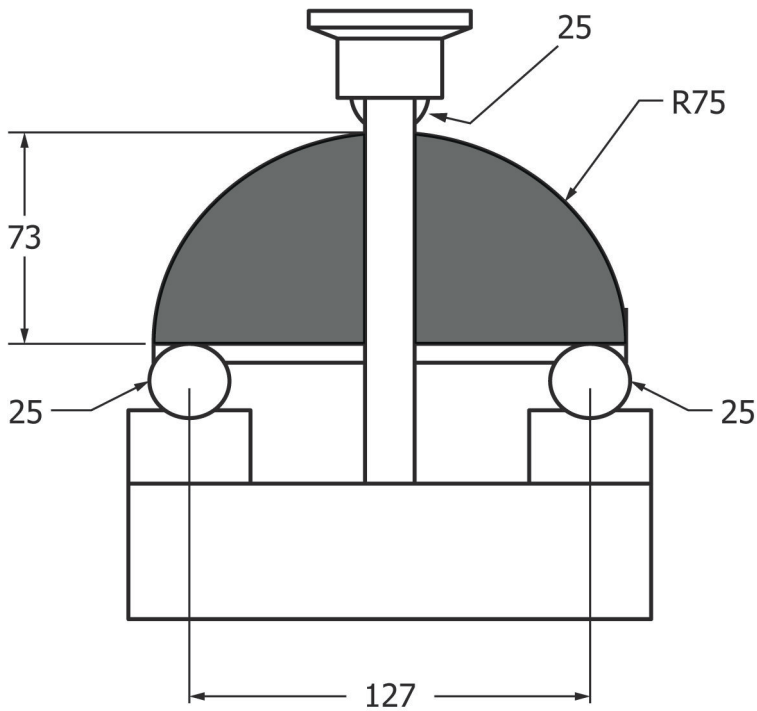

FIG. 1 Shop Drawing of SCB Test Fixture

7. Sampling, Test Specimens, and Test Units

7.1 Semi-circular bend testing may be performed on field cores or laboratory-prepared test specimens. (See Practices D5361/D5361M and D979/D979M.)

7.2 *Laboratory-Compacted Asphalt Mixture Samples:*

7.2.1 *Specimen Size*—The specimens shall be 150 mm in diameter by 120 mm thick.

7.2.2 *Air Void Content*—Prepare a minimum of three gyratory specimens at the target air void content using the Superpave Gyratory Compactor (SGC) according to Test Method D6925 at the target air void content ± 1 %. The typical air void target for the test specimens is 7.0 %.

NOTE 2—The specimen air voids are calculated using Test Methods D2041/D2041M, D2726/D2726M, D3203/D3203M, and D6857/D6857M.

7.2.3 The semi-circular shaped specimens are prepared by first cutting a 150 mm diameter by 120 mm thick specimen into two equal circular test samples 57 ± 2 mm thick. These samples are cut along its central axis into two equal semi-circular samples. The height of the semi-circular specimen

AVA Documents
Document Sharing Hub

Full document details: ASTM D8044-23