This international standard was developed in accordance with internationally recognized principles on standardization established in the Decision on Principles for the Development of International Standards, Guides and Recommendations issued by the World Trade Organization Technical Barriers to Trade (TBT) Committee.

Designation: D8111 – 23a

Standard Test Method for Evaluation of Automotive Engine Oils in the Sequence IIIH, Spark-Ignition Engine[1]

This standard is issued under the fixed designation D8111; the number immediately following the designation indicates the year of original adoption or, in the case of revision, the year of last revision. A number in parentheses indicates the year of last reapproval. A superscript epsilon (ε) indicates an editorial change since the last revision or reapproval.

INTRODUCTION

Portions of this test method are written for use by laboratories that make use of ASTM Test Monitoring Center (TMC)[2] services (see Annex A1).

The TMC provides reference oils, and engineering and statistical services to laboratories that desire to produce test results that are statistically similar to those produced by laboratories previously calibrated by the TMC.

In general, the test purchaser decides if a calibrated test stand is to be used. Organizations such as the American Chemistry Council require that a laboratory utilize the TMC services as part of their test registration process. In addition, the American Petroleum Institute and the Gear Lubricant Review Committee of the Lubricant Review Institute (SAE International) require that a laboratory use the TMC services in seeking qualification of oils against their specifications.

The advantage of using the TMC services to calibrate test stands is that the test laboratory (and hence the test purchaser) has an assurance that the test stand was operating at the proper level of test severity. It should also be borne in mind that results obtained in a non-calibrated test stand may not be the same as those obtained in a test stand participating in the ASTM TMC services process.

ASTM International policy is to encourage the development of test procedures based on generic equipment. It is recognized that there are occasions where critical/sole-source equipment has been approved by the technical committee (surveillance panel/task force) and is required by the test procedure. The technical committee that oversees the test procedure is encouraged to clearly identify if the part is considered critical in the test procedure. If a part is deemed to be critical, ASTM encourages alternative suppliers to be given the opportunity for consideration of supplying the critical part/component providing they meet the approval process set forth by the technical committee.

An alternative supplier can start the process by initiating contact with the technical committee (current chairs shown on ASTM TMC website). The supplier should advise on the details of the part that is intended to be supplied. The technical committee will review the request and determine feasibility of an alternative supplier for the requested replacement critical part. In the event that a replacement critical part has been identified and proven equivalent the sole-source supplier footnote shall be removed from the test procedure.

1. Scope*

1.1 This test method covers an engine test procedure for evaluating automotive engine oils for certain high-temperature performance characteristics, including oil thickening (as measured by kinematic viscosity increase), piston deposits, ring sticking, oil consumption, and phosphorus retention. Such oils include both single-viscosity and multiviscosity grade oils that are used in both spark-ignition, gasoline-fueled engines, as well as in diesel engines.

1.1.1 Additionally, with nonmandatory supplemental requirements, a Sequence IIIHA Test (Mini Rotary Viscometer and Cold Cranking Simulator measurements), or a Sequence

[1] This test method is under the jurisdiction of ASTM Committee D02 on Petroleum Products, Liquid Fuels, and Lubricants and is the direct responsibility of Subcommittee D02.B0 on Automotive Lubricants.

Current edition approved July 1, 2023. Published July 2023. Originally approved in 2017. Last previous edition approved in 2023 as D8111 – 23. DOI: 10.1520/D8111-23A.

[2] Until the next revision of this test method, the ASTM Test Monitoring Center will update changes in the test method by means of information letters. Information letters may be obtained from the ASTM Test Monitoring Center, 203 Armstrong Drive, Freeport, PA 16229, Attention: Director. This edition incorporates revisions in all information letters through No. 23-1.

*A Summary of Changes section appears at the end of this standard

Copyright © ASTM International, 100 Barr Harbor Drive, PO Box C700, West Conshohocken, PA 19428-2959. United States

Documents
Document Sharing Hub
Full document details: ASTM D8111-23a

IIIHB Test (phosphorus retention measurement) can be conducted. These supplemental test procedures are contained in Appendix X1 and Appendix X2, respectively.

NOTE 1—Companion test methods used to evaluate engine oil performance for specification requirements are discussed in SAE J304.

1.2 The values stated in SI units are to be regarded as standard. No other units of measurement are included in this standard.

1.2.1 *Exceptions:*

1.2.1.1 Where there is no direct SI equivalent such as screw threads, national pipe threads/diameters, tubing sizes, and valve sizes and springs.

1.2.1.2 The ring end gaps in Table A8.7, the dimensions for the blowby ventilation support bracket in Fig. A3.2, and the torque wrenches in Table A8.1 are in inch-pound units.

1.3 *This standard does not purport to address all of the safety concerns, if any, associated with its use. It is the responsibility of the user of this standard to establish appropriate safety, health, and environmental practices and determine the applicability of regulatory limitations prior to use.* Specific warning statements are provided in 6.11.6, 7.1, 7.2.1, and 7.3.

1.4 *This international standard was developed in accordance with internationally recognized principles on standardization established in the Decision on Principles for the Development of International Standards, Guides and Recommendations issued by the World Trade Organization Technical Barriers to Trade (TBT) Committee.*

2. Referenced Documents

2.1 *ASTM Standards:*[3]

D86 Test Method for Distillation of Petroleum Products and Liquid Fuels at Atmospheric Pressure

D130 Test Method for Corrosiveness to Copper from Petroleum Products by Copper Strip Test

D235 Specification for Mineral Spirits (Petroleum Spirits) (Hydrocarbon Dry Cleaning Solvent)

D240 Test Method for Heat of Combustion of Liquid Hydrocarbon Fuels by Bomb Calorimeter

D323 Test Method for Vapor Pressure of Petroleum Products (Reid Method)

D381 Test Method for Gum Content in Fuels by Jet Evaporation

D445 Test Method for Kinematic Viscosity of Transparent and Opaque Liquids (and Calculation of Dynamic Viscosity)

D525 Test Method for Oxidation Stability of Gasoline (Induction Period Method)

D664 Test Method for Acid Number of Petroleum Products by Potentiometric Titration

D1319 Test Method for Hydrocarbon Types in Liquid Petroleum Products by Fluorescent Indicator Adsorption

D2699 Test Method for Research Octane Number of Spark-Ignition Engine Fuel

D2700 Test Method for Motor Octane Number of Spark-Ignition Engine Fuel

D3231 Test Method for Phosphorus in Gasoline

D3237 Test Method for Lead in Gasoline by Atomic Absorption Spectroscopy

D3244 Practice for Utilization of Test Data to Determine Conformance with Specifications

D3338 Test Method for Estimation of Net Heat of Combustion of Aviation Fuels

D3343 Test Method for Estimation of Hydrogen Content of Aviation Fuels

D4052 Test Method for Density, Relative Density, and API Gravity of Liquids by Digital Density Meter

D4175 Terminology Relating to Petroleum Products, Liquid Fuels, and Lubricants

D4485 Specification for Performance of Active API Service Category Engine Oils

D4684 Test Method for Determination of Yield Stress and Apparent Viscosity of Engine Oils at Low Temperature

D4739 Test Method for Base Number Determination by Potentiometric Hydrochloric Acid Titration

D4815 Test Method for Determination of MTBE, ETBE, TAME, DIPE, tertiary-Amyl Alcohol and C_1 to C_4 Alcohols in Gasoline by Gas Chromatography

D5185 Test Method for Multielement Determination of Used and Unused Lubricating Oils and Base Oils by Inductively Coupled Plasma Atomic Emission Spectrometry (ICP-AES)

D5191 Test Method for Vapor Pressure of Petroleum Products and Liquid Fuels (Mini Method)

D5293 Test Method for Apparent Viscosity of Engine Oils and Base Stocks Between –10 °C and –35 °C Using Cold-Cranking Simulator

D5452 Test Method for Particulate Contamination in Aviation Fuels by Laboratory Filtration

D5453 Test Method for Determination of Total Sulfur in Light Hydrocarbons, Spark Ignition Engine Fuel, Diesel Engine Fuel, and Engine Oil by Ultraviolet Fluorescence

D7320 Test Method for Evaluation of Automotive Engine Oils in the Sequence IIIG, Spark-Ignition Engine

D8047 Test Method for Evaluation of Engine Oil Aeration Resistance in a Caterpillar C13 Direct-Injected Turbocharged Automotive Diesel Engine

E29 Practice for Using Significant Digits in Test Data to Determine Conformance with Specifications

E168 Practices for General Techniques of Infrared Quantitative Analysis

E191 Specification for Apparatus For Microdetermination of Carbon and Hydrogen in Organic and Organo-Metallic Compounds

2.2 *SAE Standards:*[4]

J183 Engine Oil Performance and Engine Service Classification (Other Than "Energy-Conserving")

[3] For referenced ASTM standards, visit the ASTM website, www.astm.org, or contact ASTM Customer Service at service@astm.org. For *Annual Book of ASTM Standards* volume information, refer to the standard's Document Summary page on the ASTM website.

[4] Available from SAE International (SAE), 400 Commonwealth Dr., Warrendale, PA 15096, http://www.sae.org.

AVA Documents
Document Sharing Hub

Full document details: ASTM D8111-23a

J300 Engine Oil Viscosity Classification
J304 Engine Oil Tests *HS-23/00*

2.3 *Other ASTM Documents:*
Guidelines for Calibration[5]
The Lubricant Test Monitoring System, Sequence IIIH Test Control Chart Technique for Developing and Applying Severity Adjustments (SA)[6]
ASTM Deposit Rating Manual No. 20 (Formerly CRC Manual 20)[7]

2.4 *Other Standards:*
MIL-PRF-2104 Performance Specification: Lubricating Oil, Internal Combustion Engine, Combat/Tactical Service[8]
API 1525 Bulk Oil Testing, Handling, and Storage Guidelines Documentation[9]

3. Terminology

3.1 *Definitions:*

3.1.1 *air-fuel ratio, n—in internal combustion engines*, the mass ratio of air-to-fuel in the mixture being induced into the combustion chambers. **D4175**

3.1.2 *automotive, adj*—descriptive of equipment associated with self-propelled machinery, usually vehicles driven by internal combustion engines. **D4175**

3.1.3 *blowby, n—in internal combustion engines*, that portion of the combustion products and unburned air/fuel mixture that leaks past piston rings into the engine crankcase during operation. **D4175**

3.1.4 *calibrate, v*—to determine the indication or output of a device (e.g., thermometer, manometer, engine) with respect to that of a standard. **D4175**

3.1.5 *calibrated test stand, n*—a test stand on which the testing of reference material(s), conducted as specified in the standard, provided acceptable test results.

3.1.5.1 *Discussion*—In several automotive lubricant standard test methods, the ASTM Test Monitoring Center provides testing guidance and determines acceptability. **D4175**

3.1.6 *cold-stuck piston ring, n—in internal combustion engines*, a piston ring that is stuck when the piston and ring are at room temperature, but inspection shows that it was free during engine operation.

3.1.6.1 *Discussion*—A cold-stuck piston ring cannot be moved with moderate finger pressure. It is characterized by a polished face over its entire circumference, indicating essentially no blowby passed over the outside of the ring during operation. **D4175**

3.1.7 *corrosion, n—the chemical or electrochemical reaction between a material*, usually a metal surface, and its environment that can produce a deterioration of the material and its properties. **D4175**

3.1.8 *engine oil, n*—a liquid that reduces friction or wear, or both, between the moving parts within an engine; removes heat, particularly from the underside of pistons; and serves as a combustion gas sealant for piston rings.

3.1.8.1 *Discussion*—It may contain additives to enhance certain properties. Inhibition of engine rusting, deposit formation, valve train wear, oil oxidation, and foaming are examples. **D4175**

3.1.9 *hot-stuck piston ring, n—in internal combustion engines*, a piston ring that is stuck when the piston and ring are at room temperature, and inspection shows that it was stuck during engine operation.

3.1.9.1 *Discussion*—The portion of the ring that is stuck cannot be moved with moderate finger pressure. A hot-stuck ring is characterized by varnish or carbon across a portion of its face, indicating that portion of the ring was not contacting the cylinder wall during engine operation. **D4175**

3.1.10 *lubricant test monitoring system (LTMS), n*—an analytical system in which ASTM calibration test data are used to manage lubricant test precision and severity (bias). **D4175**

3.1.11 *lubricant, n*—any material interposed between two surfaces that reduces the friction or wear, or both, between them. **D4175**

3.1.12 *mass fraction of B, w_B, n*—mass of a component B in a mixture divided by the total mass of all the constituents of the mixture.

3.1.12.1 *Discussion*—Values are expressed as pure numbers or the ratio of two units of mass (for example, mass fraction of lead is $w_B = 1.3 \times 10^{-6} = 1.3$ mg/kg). **D8047**

3.1.13 *Material Safety Data Sheet (MSDS), n*—a fact sheet summarizing information about material identification; hazardous ingredients; health, physical, and fire hazards; first aid; chemical reactivities and incompatibilities; spill, leak, and disposal procedures; and protective measures required for safe handling and storage. **http://www.msdssearch.com**

3.1.14 *non-reference oil, n*—any oil, other than a reference oil; such as a research formulation, commercial oil, or candidate oil. **D4175**

3.1.15 *oxidation, n*—of engine oil, the reaction of the oil with an electron acceptor, generally oxygen, that can produce deleterious acidic or resinous materials often manifested as sludge formation, varnish formation, viscosity increase, or corrosion, or a combination thereof. **D4175**

3.1.16 *quality index (QI), n*—a mathematical formula that uses data from controlled parameters to calculate a value indicative of control performance. **D4175**

3.1.17 *Quantity, n—in the SI*, a measurable property of a body or substance where the property has a magnitude expressed as the product of a number and a unit; there are seven, well-defined base quantities (length, time, mass, temperature, amount of substance, electric current, and luminous intensity) from which all other quantities are derived (for example, volume whose SI unit is the cubic metre).

[5] Guidelines for Calibration can be found in the Lubricant Test Monitoring System, available from the Test Monitoring Center, www.astmtmc.org.

[6] Available at: https://www.astmtmc.org/ftp/datadict/IIIH/current/.

[7] Available as stock #TMCMNL20 at www.astm.org, or contact ASTM Customer Service at service@astm.org.

[8] Available from U.S. Government Printing Office, Superintendent of Documents, 732 N. Capitol St., NW, Washington, DC 20401-0001, http://www.access.gpo.gov.

[9] Available from American Petroleum Institute (API), 200 Massachusetts Ave. NW, Suite 1100, Washington, DC 20001, http://www.api.org.

AVA Documents
Document Sharing Hub

Full document details: ASTM D8111-23a

3.1.17.1 *Discussion*—Symbols for quantities must be carefully defined; are written in italic font, can be upper or lower case, and can be qualified by adding further information in subscripts, or superscripts, or in parentheses (for example, t_{fuel} = 40 °C, where t is used as the symbol for the quantity Celsius temperature and t_{fuel} is the symbol for the specific quantity fuel temperature). **D8047**

3.1.18 *reference oil, n*—an oil of known performance characteristics, used as a basis for comparison.

3.1.18.1 *Discussion*—Reference oils are used to calibrate testing facilities, to compare the performance of other oils, or to evaluate other materials (such as seals) that interact with oils. **D4175**

3.1.19 *standard test, n*—a test on a calibrated test stand, using the prescribed equipment according to the requirements in the test method, and conducted according to the specified operating conditions. **D4175**

3.1.20 *special parts supplier (SPS), n*—the manufacturer and supplier of many of the parts and fixtures used in this test method. **D7320**

3.1.21 *test oil, n*—any oil subjected to evaluation in an established procedure.

3.1.21.1 *Discussion*—It can be any oil selected by the laboratory conducting the test. It could be an experimental product or a commercially available oil. Often, it is an oil that is a candidate for approval against engine oil specifications (such as manufacturers' or military specifications, etc.) **D4175**

3.1.22 *test parameter, n*—a specified component, property, or condition of a test procedure.

3.1.22.1 *Discussion*—Examples of *components* are fuel, lubricant, reagent, cleaner, and sealer; of *properties* are density, temperature, humidity, pressure, and viscosity; and of *conditions* are flow rate, time, speed, volume, length, and power. **D4175**

3.1.23 *test procedure, n*—one where test parameters, apparatus, apparatus preparation, and measurements are principal items specified. **D4175**

3.1.24 *test stand, n*—a suitable foundation (such as a bedplate) to which is mounted a dynamometer, and which is equipped with a suitable data acquisition system, fluids process control system, supplies of electricity, compressed air, and so forth, to provide a means for mounting and operating an engine in order to conduct a Sequence IIIH engine oil test. **D7320**

3.1.25 *used oil, n*—any oil that has been in a piece of equipment (for example, an engine, gearbox, transformer, or turbine), whether operated or not. **D4175**

3.1.26 *varnish, n*—in internal combustion engines, a hard, dry, generally lustrous, deposit that can be removed by solvents but not by wiping with a cloth. **D4175**

3.1.27 *volume fraction of B,* φ_B, *n*—volume of component B divided by the total volume of the all the constituents of the mixture prior to mixing.

3.1.27.1 *Discussion*—Values are expressed as pure numbers or the ratio of two units of volume (for example, φ_B = 0.012 = 1.2 % = 1.2 cL/L). **D8047**

3.2 *Definitions of Terms Specific to This Standard:*

3.2.1 *build-up oil, n*—EF-411, non-compounded, ISO VG 32 (SAE 10) oil used in lubricating some of the Sequence IIIH parts during engine assembly.

3.2.2 *central parts distributor (CPD), n, n*—the manufacturer and supplier of many of the parts and fixtures used in this test method.

3.2.2.1 *Discussion*—Because of the need for rigorous inspection and control of many of the parts used in this test method, and because of the need for careful manufacture of special parts and fixtures used, companies having the capabilities to provide the needed services have been selected as the official suppliers for the Sequence IIIH test method. These companies work closely with the original parts suppliers, with the Test Procedure Developer, and with the ASTM groups associated with the test method to help ensure that the equipment and materials used in the method function satisfactorily. **D7320**

3.2.3 *reference oil test, n*—a standard Sequence IIIH engine oil test of a reference oil designated by the TMC.

3.2.4 *test procedure developer, n*—the group or agency which developed the Sequence IIIH test procedure before its standardization by ASTM, and which continues to be involved with the test in respect to modifications in the test method, development of Information Letters, supply of test parts, and so forth.

3.2.4.1 *Discussion*—In the case of the Sequence IIIH test, the Test Procedure Developer is the Chrysler Technology Center.

3.2.5 *test start, n*—introduction of test oil into the engine after the final assembly and mounting in the test stand. **D7320**

3.3 *Acronyms:*

3.3.1 ACC—American Chemical Society

3.3.2 AFR—air fuel ratio

3.3.3 APP—accelerator pedal position

3.3.4 AWG—American wire gauge

3.3.5 CCS—cold cranking simulator

3.3.6 CPD—central parts distributor

3.3.7 DAQ—data acquisition

3.3.8 dc—direct current

3.3.9 ECM—engine control module

3.3.10 ECU—electronic control unit

3.3.11 EOT—end of test

3.3.12 FCM—fluid conditioning module

3.3.13 FTIR—Fourier transform infrared

3.3.14 ICP-AES—inductively coupled plasma-atomic emission spectrometry

3.3.15 ID—internal diameter

3.3.16 LTMS—lubricant test monitoring system

3.3.17 M—the detergent metal with the highest concentration in the fresh oil

3.3.18 MRV—mini-rotary viscometer

AVA Documents
Document Sharing Hub

Full document details: ASTM D8111-23a

3.3.19 MSDS—material safety data sheet

3.3.20 NM—not measured

3.3.21 OE—original equipment

3.3.22 PCM—powertrain control module

3.3.23 P/N—part number

3.3.24 PTFE—polytetrafluoroethylene

3.3.25 RTV Silicone—room temperature vulcanization silicone

3.3.26 SA—severity adjustment

3.3.27 SAE—Society of Automotive Engineers

3.3.28 SOT—start of test

3.3.29 SPS—special parts supplier

3.3.30 TAN—total acid number

3.3.31 TBN—total base number

3.3.32 TMC—Test Monitoring Center

3.3.33 TR—test result

3.3.34 TVTM—too viscous to measure

3.3.35 WPD—weighted piston deposit

3.4 *Quantity Symbols:*

3.4.1 F_C—corrected blowby flow rate (11.8.3)

3.4.2 F_M—measured blowby flow rate (11.8.3)

3.4.3 i—quantity measured in the test (10.4.6)

3.4.4 ip—intermediate precision limit (14.1.2.1)

3.4.5 L_i—the lower-specification limit for the measured quantity i (10.4.6)

3.4.6 n—the total number of data points taken (10.4.6)

3.4.7 p—pressure at the exit of the blowby canister (11.8.3)

3.4.8 P_{ret}—phosphorus retention (X2.5.1.3)

3.4.9 QI—quality index (10.4.6)

3.4.10 R—reproducibility limit (14.1.3.1)

3.4.11 S—estimated standard deviation (Table 7, footnote D)

3.4.12 t—Celsius temperature at the exit of the blowby canister (11.8.3)

3.4.13 U_i—the upper-specification limit for the measured quantity i (10.4.6)

3.4.14 $w(M_{EOT})$—mass fraction of metal M at EOT (X2.5.1.3)

3.4.15 $w(M_I)$—mass fraction of metal M in the initial oil sample (X2.5.1.3)

3.4.16 $w(P_{EOT})$—mass fraction of phosphorus in the EOT sample (X2.5.1.3)

3.4.17 $w(P_I)$—mass fraction of phosphorus in the initial oil sample (X2.5.1.3)

3.4.18 X_i—the recorded value for the measured quantity i (10.4.6)

4. Summary of Test Method

4.1 A Chrysler Pentastar V-6 test engine with a displacement of 3.6 L is disassembled, honed, solvent-cleaned, measured, and rebuilt using new parts installed as specified in this test method.

4.2 The engine is installed on a test stand equipped with an appropriate data acquisition system, the required fluids process control system, and all necessary accessories for controlling speed, torque, and various other operating test parameters.

4.3 The engine is charged with the test oil.

4.4 The engine is operated for an initial run-in period of 8 min to check all test stand operating systems and to establish a zero-hour, oil-level reading. An oil sample is also taken to allow the measurement of the initial oil viscosity.

4.5 The initial oil level in the oil pan is determined after the 8 min initial run-in, and subsequent oil-level calculations are determined during the oil-leveling period at the end of each 20 h segment.

4.6 Following the run-in and oil-leveling period of 8 min, the engine is ramped up to test conditions over a 5 min period, then operated under non-cyclic conditions, at moderately high-speed and torque, and at specified temperatures for 90 h, in four 20 h segments and one 10 h segment.

4.7 Used-oil samples are taken after the 8 min initial run-in, after each 20 h test segment and at the end of test (EOT); kinematic viscosity at 40 °C is determined for each of the six samples; the percentage change in viscosity of the five latter samples is determined relative to the viscosity of the first used-oil sample (8 min initial run-in).

4.8 The EOT sample is also used to determine the apparent viscosity in the minirotary viscometer (which is required for the nonmandatory Sequence IIIHA test) and the phosphorus retention of the test lubricant after 90 h Sequence IIIH test operation (which is required for the nonmandatory Sequence IIIHB test).

4.9 At the conclusion of the test, the engine is disassembled and the parts are visually rated to determine the extent of deposits formed.

5. Significance and Use

5.1 This test method was developed to evaluate automotive engine oils for protection against oil thickening and piston deposits during moderately high-speed, hightemperature service.

5.1.1 The increase in kinematic viscosity of the oil indicates the tendency of an oil to thicken because of oxidation. In automotive service, such thickening can cause oil pump starvation and resultant catastrophic engine failures.

5.1.2 The deposit ratings for an oil indicate the tendency for the formation of deposits throughout the engine, including those that can cause sticking of the piston rings in their grooves. In automotive service, such ring sticking can cause a loss of compression pressures in the engine.

5.2 The test method was developed to correlate with oils of known good and poor protection against oil thickening and piston deposits. Specially formulated oils that produce less than desirable results with unleaded fuels were also used during the development of this test.

5.3 The Sequence IIIH engine oil test has been recommended as a replacement for the Sequence IIIG test and is expected to be used in specifications and classifications of engine lubricating oils, such as the following:

AVA Documents
Document Sharing Hub

Full document details: ASTM D8111-23a

5.3.1 Specification D4485.
5.3.2 Military Specification MIL-PRF-2104.
5.3.3 SAE Classification J183.

6. Apparatus

6.1 *Laboratory*—Observe the following laboratory conditions to ensure good control of test operations and good repeatability:

6.1.1 Maintain the ambient laboratory atmosphere relatively free of dirt, dust, and other contaminants.

6.1.2 Filter the air in the engine build-up area, and control its temperature and humidity to prevent accumulation of dirt or rust on engine parts.

6.1.3 If an engine is assembled in an area of controlled environment and moved to a non-controlled area, provide suitable protection of the engine so that moist air cannot enter the engine and promote rusting before the test.

6.1.4 A fan is required to be installed to direct air flow on or near the electronic components in the exhaust system; but air (hot or cold) is not permitted to be directed onto other engine surfaces during test operation.

6.2 *Specified Equipment:*

6.2.1 Use the equipment specified in the procedure (see Tables 1-3) whenever possible. Substitution of equivalent equipment is allowed, but only after equivalency has been proven to the satisfaction of the TMC, the Test Procedure Developer (see 3.2.4.1) and the ASTM Sequence IIIH Surveillance Panel.

6.2.2 Do not use heat lamps or fans directed at the engine and do not use insulation on the engine for oil or coolant temperature control.

6.2.2.1 For operator safety and the protection of test components, the use of shielding and insulation on the exhaust system may be incorporated downstream of the oxygen sensor elbow.

6.2.2.2 To minimize the temperature effects on electronic components near the exhaust system, place a fan with an output less than 140 L/s at the front of the engine with the air flow directed toward the exhaust pipes, parallel to the driveshaft. Place fan at a minimum of 35 cm from the centerline of the harmonic balancer.

6.3 *Drawings*—Obtain the equipment drawings referenced in Table 1 from the TMC. Because the drawings may not be to scale or may not contain dimensions, when using them to fabricate special parts, do not use a dimensionless drawing as a pattern. Drawings supplied with dimensions are considered to be correct when the temperature of the equipment is 22 °C ± 3 °C, unless otherwise specified.

6.4 *Test Engine:*

6.4.1 The test engine is based on a Chrysler 2014 Pentastar V-6 engine[10,11] with a displacement of 3.6 L, a compression ratio of 10.2:1, equipped with a production fuelinjection system and a special PCM for test-specific dynamometer operation. The variable valve timing is disabled by the use of

[10] The sole source of supply of this equipment known to the committee at this time is AER Sales, 1605 Surveyor, Carrollton TX, 75006 1-800-237-0001.

[11] If you are aware of alternative suppliers, please provide this information to ASTM International Headquarters. Your comments will receive careful consideration at a meeting of the responsible technical committee,[1] which you may attend.

TABLE 1 Control-System/Engine-Interface Components

Component Description	Part Number	Supplier[A]
Pump, water, modified, Seq. IIIH Chrysler	OHT3H-300-1	OH Technologies
Coolant crossover, Seq. IIIH Chrysler	OHT3H-302-1	OH Technologies
Adapter, coolant crossover, Seq. IIIH Chrysler	OHT3H-303-1	OH Technologies
Jumper, harness segment, throttle control, Seq. IIIH Chrysler[B]	OHT3H-004-1	OH Technologies
Harness, dyno, Seq. IIIH Chrysler	OHT3H-005-1	OH Technologies
Exhaust turndown pipe drawings	IIIH-ETB30-B	TMC
	IIIH-ETB31-B	
	IIIH-ETB32-B	
	IIIH-ETB40-B	
	IIIH-ETP42-B	
Air cleaner (optional)	04861729AB	Chrysler Dealer
Air resonator	04861731AB	Chrysler Dealer
Air hose (optional)	04861732AB	Chrysler Dealer
Throttle pedal (optional)	68043161AB	Chrysler Dealer
Electric starter (optional if air starter is used)	56029852AA	Chrysler Dealer
O_2 sensor	56029050AA	Chrysler Dealer
Powertrain control module (PCM)	IMTS161000UC-PCM	International Machine Tool & Service (IMTS)[C]
Manual flywheel (2013 JK)	05184438AB	Chrysler Dealer
J-TEC blowby meter	VF563AA	J-Tec Associates, Inc.
Blowby canister	CCV6000	J-Tec Associates, Inc.
Dynamometer Driveshaft w/1410 U-Joints[D]	Midwest 1014A	Dyne Systems

[A] Contact information for the suppliers is given in Appendix X3.
[B] Alternatively an accelerator pedal position (APP) sensor simulator circuit may be used as described in Annex A11.
[C] The sole source of supply known to the committee at this time is International Machine Tool & Service (IMTS) Co., 8460 Ronda Dr., Canton, MI 48187, USA, www.imtsind.com. If you are aware of alternative suppliers, please provide this information to ASTM International Headquarters. Your comments will receive careful consideration at a meeting of the responsible technical committee,[1] which you may attend.
[D] Available through local suppliers.

AVA Documents
Document Sharing Hub

Full document details: ASTM D8111-23a

TABLE 2 Engine-Build Parts List

Part Name	Quantity per Test	Part Number	Required Supplier[A]
Test engine, 2014 3.6L Pentastar RT	1	682524464AG (older version 05184464AH)	Mopar
Cylinder head – Left[B] (MS Seed/MC Core)	1	LH451AO-MSD	International Machine Tool & Service (IMTS)
Cylinder head – Right[B] (MS Seed/MC Core)	1	RH516AO-MS	International Machine Tool & Service (IMTS)
Piston, special test	6	OHT3H-070-1	OH Technologies, Inc.
Head gasket, right	1	05184456AH	Chrysler Dealer
Head gasket, left	1	05184455AI	Chrysler Dealer
Head bolts	8	06509564AA	Chrysler Dealer
Rod bolts	12	06509128AA	Chrysler Dealer
Exhaust flange gasket (cylinder head to exhaust)	2	68093232AA	Chrysler Dealer
Piston ring pack:	1		OH Technologies, Inc.
Ring, special test, UCR (0.025 mm gap, 96.040 mm bore)		3H96040-TOP	OH Technologies, Inc.
Ring, special test, LCR (0.035 mm gap, 96.040 mm bore)		3H96040-SECOND	OH Technologies, Inc.
Expander, Seq. IIIH		3H96040-EXP	OH Technologies, Inc.
Rail, Seq. IIIH		3H96040-RAIL	OH Technologies, Inc.
Pin, wrist, piston	6	OHT3H-071-1	OH Technologies, Inc.
Clip, piston, wrist pin	12	OHT3H-072-1	OH Technologies, Inc.
Phaser, intake (fixed at 100°, less rotor holes)	2	OHT3H-001-1	OH Technologies, Inc.
Phaser, exhaust (fixed at 112°, less rotor holes)	2	OHT3H-002-1	OH Technologies, Inc.
Oil pan[C]	1	OHT3H-304-2	OH Technologies, Inc.
Gasket, Oil Pan	1	OHT3H304-18	OH Technologies, Inc.
Seal, Valve Guide	24	5184168AB	Chrysler Dealer

[A] Contact information for the suppliers is given in Appendix X3.
[B] All cylinder head purchases require a core exchange from each test engine.
[C] Oil pan and plug may be used for multiple tests. Replace at the discretion of the laboratory either upon failure of pressure check or visual inspection.

TABLE 3 Recommended Control Parts for the FCM

Part Name	Supplier[A]	Part Number	Description
2-way coolant flow control valve	Badger Meter Inc.	9003GCW36SV3A29L36	2 in., 2-way air to close. Alternatively, a variable frequency drive (VFD) may be used instead of a 2-way valve to control pump speed and coolant flow. If necessary, a flow restrictor may be incorporated in place of the 2-way valve to achieve the required system pressure. Where a VFD is installed any pump capable of maintaining the required flow rate may be used.
Heat exchanger	Kinetic Engineering Corp.		Tube and shell heat exchanger is an acceptable alternative.
Coriolis flow meter	Micro Motion Inc.	R200S418NCAMEZZZ Z meter, 1700I13ABMEZZZ transmitter	Any other meter used shall meet or exceed a mass flow accuracy of ±0.75 % and mass flow repeatability of ±0.50 %.
Fuel temperature heat exchange	Laboratory determined		
3-way coolant temperature control valve	Badger Meter Inc.	9003TCW36SV3AXXL36	2 in., globe cast 3-way wafer type, NPT 316/316L stainless steel body size 35, actuator, air to close, 3 spring for a 3 psi to 15 psi signal range. Alternatively, the use of the 3-way valve is not required if control of process water flow through the main engine coolant heat exchanger is maintained using a suitable 2-way valve (see Fig. 1).
Oil temperature control valve	Badger Meter Inc.	1002GCN36SVCSALN36	½ in. 2-way Research valve, A-trim
Drive shaft			Driveshaft w/1410 U-Joints
Coolant pump	Aurora[B]	341A BF 1.5X2X9	

[A] Contact information for the suppliers is given in Appendix X3.
[B] Aurora Model 3801 1.5X2X9 with 5 hp motor has been found to be a suitable replacement.

fixed phasers in place of the production cam phasers. Complete test engines are available for purchase from Mopar.[12,11] Each test will consist of a single, new complete test engine that will be assembled according to the Sequence IIIH Engine Assembly Manual.[13]

6.4.2 *Engine Parts*—Use the engine parts specified in the Sequence IIIH Engine Assembly Manual.[13]

6.4.3 Refer to Table 2 for a complete list of parts required to assemble the test engine.

6.4.4 Use all engine parts as received from the supplier, central parts distributor (CPD), special parts supplier (SPS), or original equipment manufacturer unless modifications are specified in this test method or the Sequence IIIH Engine Assembly Manual.

[12] Mopar is the registered trade mark of Chrysler Group Customer Care, P.O. Box 21-8004, Auburn Hills, MI 48321-8004, www.mopar.com.

[13] Available from the TMC, 203 Armstrong Drive, Freeport, PA 16229. www.astmtmc.org.

Documents
Document Sharing Hub

Full document details: ASTM D8111-23a

6.4.5 Before disposing of any Sequence IIIH engine parts, destroy or otherwise render them useless for automotive engine applications.

6.5 *Engine Speed and Torque Control*—Use dynamometer speed and torque control systems that are capable of controlling the speed and torque requirements described in 10.4.

6.6 *Fluid Conditioning Module (FCM):*

6.6.1 *General*—The FCM controls the following test parameters: flow rate and temperature of the engine coolant, coolant flow rate through the engine oil cooler, and the test fuel supply. The components for this module are shown in Table 3.

6.6.2 *Engine Cooling System*—The FCM supplies coolant pressurized to 200 kPa, at a flow rate of 170 L/min and controls the coolant temperature at 115 °C at the engine coolant outlet. The system incorporates the following features: pump, Coriolis-type flow meter, flow-control and three-way-control valves (not required for alternative system, see Fig. 1), external cooling system, and low-point drains.

6.6.2.1 The system integrates with the test stand data acquisition and control computer for process control and maintains the specified engine coolant temperature and flow.

6.6.2.2 Schematics of the required flow system for the engine coolant are shown in Figs. 1 and 2.

6.6.2.3 A complete list of acceptable control system/engine interface components is shown in Table 1.

6.6.2.4 A list of parts for the engine coolant flow system control equipment is shown in Table 3.

6.6.2.5 Install a 3 kΩ resistor across the temperature sensor for the engine coolant to allow the PCM to receive an appropriate signal voltage to run the engine without the need to plug in the sensor wire on the wiring harness.

6.6.2.6 Flush the coolant system for the test stand with clean water at least once each reference period.

6.7 *Engine-Oil Cooling System*—The FCM controls engine-oil temperature by controlling the flow of engine coolant through the production oil cooler with the use of a 2-way, flow-control valve.

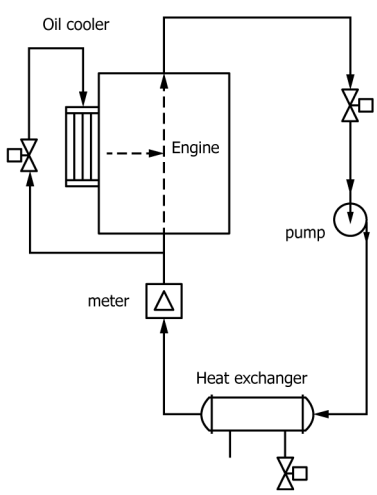

FIG. 1 Schematic of Flow System for Engine Coolant Flow Removing the Three-Way Valve and Controlling Coolant Temperature Using a Two-Way Valve at the Heat Exchanger

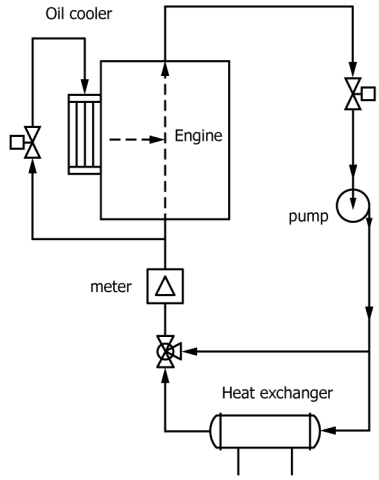

FIG. 2 Schematic of Flow System for Engine Coolant Using a Three-Way Control Valve to Maintain Coolant Flow

6.7.1 Do not use cuprous lines or fittings in the oil cooling system.

6.7.2 Do not use magnetic plugs in the oil system.

6.8 *Fuel System*—The FCM includes a pressure regulator to provide fuel at 420 kPa ± 20 kPa. Maintain fuel temperature at 30 °C throughout the test.

6.9 *Induction Air System*—Maintain the throttle body intake air at a moisture content of 11.4 g/kg ± 0.7 g/kg of dry air, a dry bulb temperature of 35 °C ± 2 °C, dew point of 16.1 °C and a static pressure of 0.050 kPa. Measure air-intake temperature and pressure at the air resonator (Chrysler P/N (part number) 04861731AB)[10,11] in the center of flow 7 mm from the opening as shown in Fig. A2.1.

6.10 *Pressure-Transducer Locations:*

6.10.1 *Coolant Pressure*—Connect the transducer to the modified coolant crossover adapter P/N OHT3H303-1.[14,11] Transducers with a gauge pressure range of 0 kPa to 300 kPa have been found to be suitable.

6.10.2 *Intake Air Pressure*—Install the transducer to the location shown in Fig. A2.1 and Fig. A2.5. Transducers with a gauge pressure range of –125 Pa to +125 Pa have been found to be suitable.

6.10.3 *Right- and Left-Exhaust Backpressure*—Insert probe into the exhaust turndown pipes (see TMC drawing IIIH-ETP40-B[15] position 4). Transducers with a gauge pressure range of 0 kPa to 70 kPa have been found to be suitable.

6.10.4 *Oil-Pump Pressure*—Connect the transducer to the location shown in Fig. A2.8. Transducers with a gauge pressure range of 0 kPa to 700 kPa have been found to be suitable.

6.10.5 *Oil-Gallery Pressure*—Connect the transducer to the location shown in Fig. A2.6. Transducers with a gauge pressure range of 0 kPa to 700 kPa have been found to be suitable.

[14] The sole source of supply of the apparatus known to the committee at this time is OH Technologies Inc., P.O. Box 5039, Mentor, OH 44061-5039, USA, www.ohtech.com.

[15] Available from the TMC, 203 Armstrong Drive, Freeport, PA 16229, www.astmtmc.org.

AVA Documents
Document Sharing Hub

Full document details: ASTM D8111-23a

6.10.6 *Manifold Absolute Pressure*—Connect the transducer to the vacuum port on top of the throttle body and behind the throttle plate. Transducers with an absolute pressure range of 0 kPa to 100 kPa have been found to be suitable.

6.10.7 *Fuel Pressure*—Mount a fuel-distribution block to the front of the engine within 30 cm of the fuel-rail inlet as shown in Fig. A2.4. Russell Performance P/N RUS-650370[16,11] (shown in Fig. A2.5) has been found to be suitable for fuel-pressure and temperature measurements. Transducers with a gauge pressure range of 0 kPa to 700 kPa have been found to be suitable.

6.10.8 *Crankcase Pressure*—Connect the transducer port tapped in the upper portion of the oil pan P/N OHT3H-304-2.[14,11] Transducers with a gauge pressure range of –13 kPa to +13 kPa have been found to be suitable.

6.10.9 *Blowby Pressure*—Install a transducer in the blowby-ventilation system at the exit of the blowby canister. Maintain a minimum length of 20 times the pipe diameter between the thermocouple and the J-TEC meter (see A4.1). Transducers with a gauge pressure range of –13 kPa to +13 kPa have been found to be suitable.

6.11 *Thermocouple Locations:*

6.11.1 Locate the sensing tip of all thermocouples in the center of the stream of the medium being measured unless otherwise specified.

6.11.2 *Temperature of Oil Cooler*—This thermocouple is optional. If used, install in the rear of the oil cooler as shown in Fig. A2.6 and Fig. A2.7. Ensure the sensing tip is in the middle of the flow by fully inserting the sensing tip and reversing it out by 8 mm.

6.11.3 *Temperature of Coolant Exiting the Engine*—Install the thermocouple in the coolant crossover P/N OHT3H-302-1[14,11] with the sensing tip centered in the coolant flow.

6.11.4 *Temperature of Intake Air*—Install the thermocouple through top of the air resonator, 7 cm from the edge where it joins the throttle body (see Fig. A2.3). Center the sensing tip in the center of the air flow.

6.11.5 *Fuel Temperature*—Install the thermocouple in a fuel-distribution block within 30 cm of the fuel-rail inlet (see 6.10.7). (**Warning—**Safety Hazard—Exercise care to reduce overhung masses at fuel-rail connections.)

6.11.6 *Oil-Pump Temperature*—Install the thermocouple in the oil-pump pressure/temperature assembly as shown in Fig. A2.8. Use a straight-thread plug and washer with a through hole no larger than 6 mm. A screw plug M24 × 1.5 (P/N HAR111.301.127.E) with an aluminum washer (P/N HAR 22 × 7 × 1.5 Al) has been found to be suitable.[17,11]

6.11.7 *Oil-Sump Temperature*—Install the thermocouple in the oil-sump drain plug located on the underside of the oil pan P/N OHT3H-304-2,[14,11] the sensing tip extending 10 mm beyond the end of the sump drain plug as shown in Fig. A2.9.

6.11.8 *Engine-Block Oil Temperature*—Refer to Section 4, Sheets 1 to 4, of the IIIH Engine Assembly Manual for the modification of the block required to accommodate the engine-block, oil-temperature thermocouple. To ensure the thermocouple is inserted to the correct depth, use the IMTS Thermocouple Setting Fixture P/N 151132-F002.[18,11]

6.11.9 *Temperature of Coolant Into the Engine*—Install the thermocouple in the modified water pump P/N OHT3H-300-1[14,11] with the sensing tip centered in the coolant flow.

6.11.10 *Right-Exhaust Temperature*—Install thermocouple in the exhaust turndown pipe (drawing IIIH-ETP30-B[15]) with the sensing tip centered in the exhaust flow.

6.11.11 *Left-Exhaust Temperature*—Install thermocouple in the exhaust turndown pipe (drawing IIIH-ETP30-B[15]) with the sensing tip centered in the exhaust flow.

6.11.12 *Blowby-Gas Temperature*—Install the thermocouple in the blowby ventilation system at the exit of the blowby canister. Maintain a minimum length of 20-pipe diameters between the thermocouple and the meter (see A4.1).

6.12 *Crankcase Ventilation:*

6.12.1 Ventilate blowby gasses ventilated from the test cell through a scavenger fan. Do not allow the fan to create a vacuum on the crankcase. Do not insulate any components in the blowby system. An Air Ecology Evacuation System[19,11] has been found to be suitable. The crankcase ventilation configuration is shown in Annex A3.

7. Reagents and Materials

7.1 *Test Fuel*—Use only Sequence III HF-003 EEE unleaded fuel.[20,11] (**Warning—**Flammable. Health hazard.) The fuel specification is available from the ASTM Test Monitoring Center website: www.astmtmc.org.

7.1.1 Make certain that all tanks used for transportation and storage are clean before filling with test fuel.

7.1.2 Ensure that at least 3450 L of test fuel is available.

7.2 *Engine Coolant:*

7.2.1 Use a mixture of DEX-COOL® antifreeze/coolant[21,22] and de-ionized water with a volume fraction of water of 50 %. (**Warning—**Health hazard—see appropriate MSDS).

7.2.1.1 Use new coolant for every test.

7.2.1.2 *Coolant Preparation*—Use a container of a size adequate to hold the entire coolant blend required for the system.

7.2.1.3 Measure equal parts of coolant and deionized water. Verify with a refractometer that the volume fraction of coolant in the mixture is between 48 % and 52 % coolant prior to each use.

7.2.2 Alternatively, a 50/50 premix[22] may be purchased for use if desired.

[16] Available from Summit Racing Equipment, P.O. Box 909, Akron, OH 44309–0909, tel 1-800-230-3039, www.summitraciung.com.

[17] Patrick Motor Sports, 4025 E. Madison St., Phoenix, AZ, 85034, USA, www.patrickmotorsports.com.

[18] The sole source of supply known to the committee at this time is International Machine Tool & Service (IMTS) Co., 8460 Ronda Dr., Canton, MI 48187, USA, www.imtsind.com.

[19] Purchase from AER Control Systems, 90 River St., New Haven, CT 06513, www.aercontrolsystems.com.

[20] The sole source of supply of this fuel known to the committee at this time is Haltermann Solutions, 15600 West Hardy Rd., Houston, TX, 77060. Annex A13 provides testing and other requirements for being considered as an alternate by the Sequence III Surveillance Panel.

[21] DEX-COOL® is licensed and approved engine coolant, as per GMW3420 specification.

[22] Available from retailers, autoparts stores, or any Worldwide.

AVA Documents
Document Sharing Hub

Full document details: ASTM D8111-23a

7.3 *Degreasing Solvent*—Use only mineral spirits meeting the specifications for volume fraction of aromatics 0 % to 2 %, flash point 61 °C minimum, and color not darker than +25 on Saybolt Scale or 25 on Pt-Co Scale from Specification D235 for the Type II, Class C mineral spirits. (**Warning—** Combustible. Health hazard.)

7.4 *Sealing and Anti-Seize Compounds*—Mopar ThreeBond Engine RTV;[23] P/N 68082860AA[24] Room Temperature Vulcanization Silicone (RTV silicone).[24]

7.4.1 Loctite[25] 545 Thread Sealant, Anaerobic.[26,11]

7.4.2 Loctite 567 Thread Sealant, Low strength, Anaerobic.[26,11]

7.4.3 Loctite 648 Retaining Compound, Anaerobic.[26,11]

7.4.4 Loctite Gasket Sealant 2 (Permatex #2).[26,11]

7.4.5 Polytetrafluoroethylene (PTFE) Tape.

7.5 *Engine Cleaning:*

7.5.1 Use Ultrasonic-7[27] soap and Ultrasonic-B degreaser[27] in ultrasonic parts washers to clean engine block, cylinder heads and fixed phasers. Cleaning solution shall be at a temperature of 65 °C ± 5 °C.

7.5.2 Alternatively, use an aquas cleaning solution of 50/50 Brulin US Solution[28,11] products 815 GD and 815 QR-DF or 815 QR-NF to achieve a volume fraction of 12.5 % of the total cleaning solution, provided that the laboratory has conducted a successful reference oil test using this solution.

7.6 Engine build up oil, EF-411.[29,11]

8. Test Oil Requirements

8.1 *Selection*—The supplier of the test oil sample shall determine that the test oil sample is representative of the lubricant formulation to be evaluated and that it is not contaminated.

8.2 *Quantity*—The supplier shall provide a test oil sample of at least 7.5 L.

8.3 *Storage Prior to Test*—The test laboratory shall store the test oil sample in a covered building to prevent contamination by rainwater (see also A5.3).

9. Preparation of Apparatus

9.1 *Pre-Test Engine Disassembly and Cleaning:*

9.1.1 Disassemble the new engine according to the guidelines in Section 3 of the New Engine Disassembly of the Sequence IIIH Engine Assembly Manual.[13]

9.2 *Cylinder-head Disassembly:*

9.2.1 Disassemble the production cylinder heads according to information supplied in Sections 2 and 3 of the Sequence IIIH Engine Assembly Manual.[13]

9.2.2 Send the disassembled, production cylinder heads (cylinder head cores) to the SPS for replacement of intake valve-seats.[18,11] See Section 2 Sheet 2 of the Sequence IIIH Engine Assembly Manual for details.

9.2.3 Clean the test cylinder heads as outlined in Sections 5 and 6 of the Sequence IIIH Engine Assembly Manual.

9.2.4 Assemble the modified cylinder heads P/N LH451AO-MS and RH516AO-MSD[18,11] from new engine cylinder heads. See Section 6 of the Sequence IIIH Engine Assembly Manual.

9.2.5 Use new valve-stem seals for each test.

9.3 *Block Preparation:*

9.3.1 Refer to Sections 4 and 7 of the Sequence IIIH Engine Assembly Manual for oil gallery modifications and thermocouple drilling procedures.

9.3.2 Refer to Section 4 of the Sequence IIIH Engine Assembly Manual for honing procedure.

9.4 *Oil-pump Cleaning:*

9.4.1 Refer to Section 5 of the Sequence IIIH Engine Assembly Manual for special cleaning information of the factory engine-oil pump.

9.5 *Oil-cooler Cleaning:*

9.5.1 Refer to Section 5 of the Sequence IIIH Engine Assembly Manual for special cleaning information of the factory engine-oil filter/oil cooler assembly.

9.6 Clean all remaining engine parts with degreasing solvent to remove all traces of factory engine oil.

9.7 *Test-Engine Assembly:*

9.7.1 Refer to the Sequence IIIH Engine Assembly Manual for engine build instructions. Table 2 contains a list of all parts required for the test engine build.

9.7.2 Laboratories shall maintain engine-build data sheets as shown in Annex A8. This data shall be available to the TMC and the Test Sponsor (see 3.2.4.1) for investigative studies as deemed necessary for hardware investigations during times of industry severity shifts or other problems.

9.8 *Test Stand Preparation:*

9.8.1 For every test, replace the tubing (for example, Tygon[30] or equivalent) that vents the crankcase gasses from the rocker cover (see Fig. A2.4).

9.8.2 Flush all oil-pressure lines with solvent and dry with shop air prior to the start of each test.

9.8.3 Charge the coolant system with the coolant/water mixture, cycle the coolant flow pump on and off in 5 min intervals while cycling all two-way and three-way control valves to eliminate any trapped air from the system for a minimum of 20 min prior to starting any Sequence IIIH Test.

10. Calibration

10.1 *Calibration Procedures*—Annex A5 describes calibration procedures using the TMC reference oils, including their

[23] ThreeBond is a registered trademark of ThreeBond International, Inc.

[24] Available from any Mopar dealer.

[25] Loctite is a registered trademark of Henkel Corporation.

[26] Available from Henkel. Corporation, One Henkel Way, Rocky Hill, CT 06067, USA. www henkelna.com.

[27] Available from TEI, 12718 Cimarron Path, San Antonio, TX 78249, USA, Tel: (210) 690-1958.

[28] The sole source of supply of this product known to the committee at this time is Brulin & Company, 2920 Dr. Andrew J. Brown Av, Indianapolis, IN 46205, 317.923.3211. csr@brulin.com.

[29] The sole source of supply of this product known to the committee at this time is Exxon-Mobil Oil Corp., Attention Illinois Order Board, P.O. Box 66940, AMF O'Hare, IL 60666, USA.

[30] Tygon is a registered trademark of Saint-Gobain Corporation.

AVA Documents
Document Sharing Hub

Full document details: ASTM D8111-23a

storage and conditions of use, the conducting of tests, and the reporting of results. Determine the acceptability of a reference oil test according to the Lubricant Test Monitoring System (LTMS) (see 3.1.10).

10.1.1 The effective date of a reference test is the LTMS date and time of the reference test.

10.1.2 Test start time is defined as the introduction of the reference oil into the engine.

10.2 *Maintenance Activities*—Annex A6 describes maintenance activities involving TMC reference oils, including special reference oil tests, special use of the reference oil calibration system, donated reference oil test programs, introducing new reference oils, and TMC information letters and memoranda.

10.3 *Related Information*—Annex A7 provides information regarding new laboratories, the role of the TMC regarding precision data, and the calibration of test stands used for non-standard tests.

10.4 *Data Acquisition System:*

10.4.1 The Sequence IIIH test requires the use of computerized data acquisition and control for all measured and controlled quantities outlined in this procedure. The system chosen by individual testing laboratories shall be capable of integrating with the Sequence IIIH process controller for many of these operations. The system shall also be capable of meeting or exceeding certain test-specific performance requirements for maximum allowable response times and minimum allowable sample rates. In addition to the aforementioned requirements, the system shall also be capable of data logging to test specific archival files for each test quantity at minimum allowable record intervals, that is, no greater than 2 min intervals between successive logs for each quantity. See the Data Acquisition and Control Automation II Task Force Report (DACA II)[31] and additional requirements as outlined in this procedure.

10.4.2 *Sample Rate*—The preferred sample rate is 100 Hz with the minimum allowable sample rate for the Sequence IIIH data acquisition and control system set at 1 Hz.

10.4.3 *Measurement Accuracy*—All measurement devices used for sensing speed, force, flow, pressure, and temperature shall meet the minimum requirements as outlined in the DACA II report[31] and also conform to total system response requirements as outlined by the TMC (see 10.4.5).

10.4.3.1 *Pressure Measurements*—For pressures >6.9 kPa, use only measuring devices with a full-scale accuracy of ±0.2 % for capacitive systems and ±0.25 % for strain-type systems. For pressures <6.9 kPa, use only devices with an accuracy of ±15 Pa for capacitive systems and ±14 Pa for strain-type systems. Refer to Table 4 for a list of controlled and uncontrolled pressures.

10.4.3.2 *Temperature Measurements*—Use only Type E chromel-constantan, Type J iron-constantan, or Type K Chromel and Alumel thermocouples with an accuracy of ±0.5 °C over a range of 0 °C to 200 °C. Refer to Table 4 for a list of controlled and uncontrolled temperatures.

10.4.3.3 *Flow*—For Coriolis flow meter measurements use a mass-flow accuracy of ±0.50 %, and massflow repeatability of ±0.05 %.

10.4.3.4 *Speed*—For speeds measured by frequency, use an accuracy of ±1 r/min.

10.4.3.5 *Force*—For forces measured by strain gauge, use an accuracy of ±0.25 % of full scale.

10.4.4 *Measurement Resolution*—The minimum resolution for all test quantities shall be at least 25 % of the required system accuracy for that quantity. For example, if a test procedure requires an accuracy of 1.0 unit, then the minimum resolution for that quantity is 0.25 unit.

10.4.5 *System Time Response*—Total system time response is the time required for the complete data acquisition system including all filtering, transducer lines, and surge tanks to measure a step change input for a given quantity. Determine system response times by measuring the time required to reach a certain percentage of an imposed step change. For first order

[31] Available at: https://www.astmtmc.org/ftp/docs/misc/QualityIndex/Minutes/DACA_II_Data%20Acquisition%20and%20Control%20Automation.pdf.

TABLE 4 Controlled and Uncontrolled Test Quantities

CONTROLLED QUANTITIES			
Quantity	Units	Target	QI values
Speed	r/min	3900	±5
Load	N·m	250	±0.98
Oil-block temperature	°C	151	±0.42
Coolant-out temperature	°C	115	±0.46
Intake-air temperature	°C	35	±0.37
Fuel temperature	°C	30	±1.0
Dew point	°C	16.1	±2
Intake-air pressure	kPa (gauge)	0.05	±0.02
Right-exhaust pressure	kPa (gauge)	4.5	±0.08
Left-exhaust pressure	kPa (gauge)	4.5	±0.08
Coolant flow rate	L/min	170	±1.43
Fuel Pressure	kPa (gauge)	420	±20[A]
Coolant pressure	kPa (gauge)	200	±10[A]

UNCONTROLLED QUANTITIES		
Quantity	Units	Average
Oil-pump temperature	°C	Record
Oil-sump temperature	°C	Record
Coolant-in temperature	°C	Record
Left-exhaust temperature	°C	Record
Right-exhaust temperature	°C	Record
Oil-pump pressure	kPa (gauge)	Record
Oil-gallery pressure	kPa (gauge)	Record
Manifold pressure	kPa (absolute)	Record
Fuel pressure	kPa (gauge)	Record
Crankcase pressure	kPa (gauge)	Record
Right-bank AFR[B]		Record
Left-bank AFR[B]		Record
Mass fraction NO_x right bank	mg/kg	Record
Mass fraction NO_x left bank	mg/kg	Record
Fuel flow rate	kg/h	Record

[A] This is a range rather than a QI value. QI calculations do not apply.
[B] Air fuel ratio (AFR).

Documents
Document Sharing Hub

Full document details: ASTM D8111-23a

systems, use the time to 63.2 % of the imposed step change; for moving average systems use the time to 45.4 % of the imposed step change.

10.4.5.1 See the TMC System Time Response Measurement Guidelines for methods of imposing step changes for calibration of Sequence IIIH test stands.

10.4.5.2 Maximum allowable system time responses for the data acquisition system are listed in Table 5.

TABLE 5 Maximum System Time Response

NOTE 1—For controlled (QI) Quantities Only.

Quantity	Time, s
Speed	0.10
Torque	0.60
Coolant flow	8.0
Intake air pressure	0.75
Exhaust backpressure	1.20
Temperatures	2.40

10.4.6 Calculate Quality Index (QI) for all control parameters in accordance with the DACA II report. Be sure to account for missing or bad quality data in accordance with the DACA II report as well.

10.4.6.1 Use the U, L, Over Range, and Under Range values shown in Table 6 for the QI calculations.

10.4.6.2 Round the calculated QI values to the nearest 0.001.

10.4.6.3 Report the QI values on the appropriate form.

10.4.7 The upper and lower values used for quality index calculations for the required quantities are listed in Table 4.

10.4.8 Calibrate the stand instrumentation used for data acquisition and control on all controlled and non-controlled quantities (see Table 4) every six months.

10.4.9 As a minimum, calibrate the following quantities prior to every reference test sequence, unless the required six-month calibration was completed within 60 days prior to reference test start: engine speed, dynamometer torque, engine coolant flow, engine coolant out thermocouple, main oil gallery thermocouple.

10.4.10 Calibrate the intake air-humidity system at least every six months.

10.5 *Test Numbering System:*

TABLE 6 U and L Constants and Over and Under-Range Values

Parameter	U	L	Over-Range	Under-Range
Coolant flow	171.43	168.57	244.3	91.7
Coolant out temperature	115.46	114.54	138.9	91.1
Exhaust backpressure	4.58	4.42	8.7	0.3
Dew point	18.1	14.1	120.0	0
Intake air pressure	0.07	0.03	1.1	−1.0
Intake air temperature	35.37	34.63	54.2	15.8
Oil block temperature	151.42	150.58	172.8	129.2
Speed	3905	3895	4160	3640
Torque	250.98	249.02	300.9	199.1
Fuel temperature	31	29	82	0

10.5.1 *Acceptable Tests*—The format AAA-BB-CCC is utilized for numbering tests. AAA represents the test stand number. BB represents the number of tests since last reference. CCC represents the total number of tests on the stand.

10.5.1.1 As an example, 6-10-175 represents stand number 6; 10, the tenth test since the last reference; and 175, the number of tests conducted on that stand.

10.5.1.2 Consecutively number all tests on a given stand.

10.5.2 *Unacceptable or Aborted Tests*—If a calibration test is aborted or the results are outside the acceptance limits, include a letter suffix after the CCC portion of the test numbering format.

10.5.2.1 Begin the suffix with the letter A and continue alphabetically until a calibration test is completed within the acceptance limits. For example, if three consecutive unacceptable calibration tests are completed on the same test stand, and the first test is 6-10-175, the next two test numbers would be 6-10-175A and 6-10-175B.

10.5.2.2 If the results of the next calibration test are acceptable, the test would be numbered 6-10- 175C, and would permanently identify the test and appear on future correspondence.

10.5.2.3 Add no letter suffix to the number of tests other than calibration tests.

10.5.3 The completion of any amount of operational time on tests, other than calibration tests, requires the test number to be increased by one for each infraction.

11. Engine Operating Procedure

11.1 *Engine Start-up Procedure:*

11.1.1 Charge the engine with 5.92 L of test oil using a calibrated beaker P/N OHT3H-075-1.[14,11]

11.1.2 Prior to starting the engine, prime the oil pump by turning the starter for 20 s with the ignition off.

11.1.2.1 Optionally, carry out additional priming by drawing oil into the pump by applying low pressure to the oil sample valve, ensuring that test oil is not removed from the engine in the process.

11.1.3 Supply direct current (dc) power of 13 V to 15 V to the power control module and fuel pump. Start the coolant pump and allow flow rate of the coolant to reach 170 L/min.

11.1.4 Start the engine and set the speed to 1000 r/min and the torque to 25 N·m.

11.2 *Initial Run-in:*

11.2.1 Ramp the engine speed and torque linearly to 1500 r/min and 100 N·m over 45 s maintaining this speed and torque for 8 min. See Table 7 for the control states for each ramp and step.

11.2.2 Check all stand operating conditions.

11.2.3 After the 8 min initial run-in, ramp the engine down to 1000 r/min and 25 N·m in 45 s and take the initial oil sample of 236 mL (see 11.3 for oil sampling procedure).

11.3 *Oil Sampling:*

11.3.1 Ramp speed and torque linearly to 1000 r/min and 25 N·m (see Table 7 for ramp times) and hold for 2 min to allow the operator to obtain the initial oil sample.

11.3.2 Before taking the sample, first remove a purge sample of 472 mL.

AVA Documents
Document Sharing Hub

Full document details: ASTM D8111-23a