This international standard was developed in accordance with internationally recognized principles on standardization established in the Decision on Principles for the Development of International Standards, Guides and Recommendations issued by the World Trade Organization Technical Barriers to Trade (TBT) Committee.

Designation: D8256 – 24

Standard Test Method for Evaluation of Automotive Engine Oils for Inhibition of Deposit Formation in the Sequence VH Spark-Ignition Engine Fueled with Gasoline and Operated Under Low-Temperature, Light-Duty Conditions[1]

This standard is issued under the fixed designation D8256; the number immediately following the designation indicates the year of original adoption or, in the case of revision, the year of last revision. A number in parentheses indicates the year of last reapproval. A superscript epsilon (ε) indicates an editorial change since the last revision or reapproval.

INTRODUCTION

Portions of this test method are written for use by laboratories that make use of ASTM Test Monitoring Center (TMC[2]) services (see Annex A1).

The TMC provides reference oils, and engineering and statistical services to laboratories that desire to produce test results that are statistically similar to those produced by laboratories previously calibrated by the TMC.

In general, the Test Purchaser decides if a calibrated test stand is to be used. Organizations such as the American Chemistry Council require that a laboratory use the TMC services as part of their test registration process. In addition, the American Petroleum Institute and the Gear Lubricant Review Committee of the Lubricant Review Institute (SAE International) require that a laboratory use the TMC services in seeking qualification of oils against their specifications.

The advantage of using the TMC services to calibrate test stands is that the test laboratory (and hence the Test Purchaser) has an assurance that the test stand was operating at the proper level of test severity. It should also be borne in mind that results obtained in a non-calibrated test stand may not be the same as those obtained in a test stand participating in the ASTM TMC services process.

Laboratories that choose not to use the TMC services may simply disregard these portions.

ASTM International policy is to encourage the development of test procedures based on generic equipment. It is recognized that there are occasions where critical/sole-source equipment has been approved by the technical committee (surveillance panel/task force) and is required by the test procedure. The technical committee that oversees the test procedure is encouraged to clearly identify if the part is considered critical in the test procedure. If a part is deemed to be critical, ASTM encourages alternative suppliers to be given the opportunity for consideration of supplying the critical part/component providing they meet the approval process set forth by the technical committee.

An alternative supplier can start the process by initiating contact with the technical committee (current chairs shown on ASTM TMC website). The supplier should advise on the details of the part that is intended to be supplied. The technical committee will review the request and determine feasibility of an alternative supplier for the requested replacement critical part. In the event that a replacement critical part has been identified and proven equivalent the sole-source supplier footnote shall be removed from the test procedure.

[1] This test method is under the jurisdiction of ASTM Committee D02 on Petroleum Products, Liquid Fuels, and Lubricants and is the direct responsibility of Subcommittee D02.B0.01 on Passenger Car Engine Oils.

Current edition approved May 1, 2024. Published June 2024. Originally approved in 2019. Last previous edition approved in 2023 as D8256 – 23. DOI: 10.1520/D8256-24.

[2] Until the next revision of this test method, the ASTM Test Monitoring Center will update changes in the test method by means of information letters. Information letters may be obtained from the ASTM Test Monitoring Center, 203 Armstrong Drive, Freeport, PA 16229. Attention: Director. This edition incorporates revisions in all Information Letters through No. 24-1.

Copyright © ASTM International, 100 Barr Harbor Drive, PO Box C700, West Conshohocken, PA 19428-2959. United States

Documents
Document Sharing Hub
Full document details: ASTM D8256-24

1. Scope*

1.1 This test method is commonly referred to as the Sequence VH test, and it has been correlated with the Sequence VG test. The Sequence VG test was previously correlated with vehicles used in stop-and-go service prior to 1996, particularly with regard to sludge and varnish formation.[3] It is one of the test methods required to evaluate oils intended to satisfy the API SN, SN Plus performance category.

1.2 The values stated in SI units are to be regarded as the standard. No other units of measurement are included in this standard.

1.2.1 *Exception*—Where there is no direct SI equivalent such as screw threads, national pipe threads/diameters, tubing size, or specified single source equipment.

1.3 A table of contents follows:

	Section
Scope	1
Referenced Documents	2
Terminology	3
Summary of Test Method	4
Significance and Use	5
Apparatus (General Description)	6
Apparatus (The Test Engine)	7
Sequence VH Test Engine	7.1
Required New Engine Parts	7.2
Reusable Engine Parts	7.3
Specially Fabricated Engine Parts	7.4
Special Engine Measurement and Assembly Equipment	7.5
Miscellaneous Engine Components—Preparation	7.6
Solvents and Cleaners Required	7.7
Assembling the Test Engine—Preparations	7.8
Assembling the Test Engine—Installations	7.9
Engine Installation on the Test Stand	7.10
Engine Fluids (Supply/Discharge Systems)	8
Intake Air	8.1
Fuel and Fuel System	8.2
Engine Oil and Engine Oil System	8.3
Coolants	8.4
Measurement Instrumentation	9
Temperatures	9.1
Pressures	9.2
Flow Rates	9.3
Fuel Consumption	9.4
Speed and Torque	9.5
Exhaust Gas	9.6
Humidity	9.7
Miscellaneous Laboratory Equipment	10
Test Stand Calibration	11
Test Procedure	12
Pre-Test Procedure	12.1
Engine Operating Procedure	12.2
Periodic Measurements and Functions	12.3
Special Maintenance Procedures	12.4
Diagnostic Data Review	12.5
End of Test Procedure	12.6
Interpretation of Test Results	13
Parts Rating Area—Environment	13.1
Sludge Ratings	13.2
Varnish Ratings	13.3
Clogging	13.4
Sticking	13.5
Used Oil Analyses	13.6
Assessment of Test Validity	14
General	14.1
Used Oil Analyses—Interpretation	14.2
Blowby Flow Rate	14.3
Manifold Absolute Pressure (MAP)	14.4
Fuel Consumption Rate	14.5
Oil Consumption	14.6
Engine Parts Replacement	14.7
Quality Index	14.8
Final Test Report	15
Report Forms	15.1
Precision and Bias	16
Keywords	17
ANNEXES	
ASTM TMC: Organization	Annex A1
ASTM TMC: Calibration Procedures	Annex A2
ASTM TMC: Maintenance Activities	Annex A3
ASTM TMC: Related Information	Annex A4
Safety Precautions	Annex A5
Control and Data Acquisition Requirements	Annex A6
Detailed Specifications and Photographs of Apparatus	Annex A7
Test Engine Part Number, Classification, and Usage Guidelines	Annex A8
External Oil Heat Exchanger Cleaning Technique	Annex A9
Sequence VH Report Forms and Data Dictionary	Annex A10
Dipstick Calibration	Annex A11
Critical Part Supplier List	Annex A12
Operational Data Log—Engine Oil	Annex A13
Rating Worksheets	Annex A14
Fuel Injector Flow Measurements	Annex A15
APPENDIXES	
Piston and Ring Measurements Record Forms	Appendix X1
Sources of Materials and Information	Appendix X2

1.4 *This standard does not purport to address all of the safety concerns, if any, associated with its use. It is the responsibility of the user of this standard to establish appropriate safety, health, and environmental practices and determine the applicability of regulatory limitations prior to use.* Specific hazard statements are given in 7.7, 7.7.1, 7.7.2, 7.7.3, 7.7.4, 7.7.5, A5.3.4, and A5.3.5.5.

1.5 *This international standard was developed in accordance with internationally recognized principles on standardization established in the Decision on Principles for the Development of International Standards, Guides and Recommendations issued by the World Trade Organization Technical Barriers to Trade (TBT) Committee.*

2. Referenced Documents

2.1 *ASTM Standards:*[4]

D86 Test Method for Distillation of Petroleum Products and Liquid Fuels at Atmospheric Pressure

D235 Specification for Mineral Spirits (Petroleum Spirits) (Hydrocarbon Dry Cleaning Solvent)

D287 Test Method for API Gravity of Crude Petroleum and Petroleum Products (Hydrometer/Method)

D323 Test Method for Vapor Pressure of Petroleum Products (Reid Method)

D381 Test Method for Gum Content in Fuels by Jet Evaporation

D445 Test Method for Kinematic Viscosity of Transparent and Opaque Liquids (and Calculation of Dynamic Viscosity)

D525 Test Method for Oxidation Stability of Gasoline (Induction Period Method)

[3] Supporting data have been filed at ASTM International Headquarters and may be obtained by requesting Research Report RR:D02-1472. Contact ASTM Customer Service at service@astm.org.

[4] For referenced ASTM standards, visit the ASTM website, www.astm.org, or contact ASTM Customer Service at service@astm.org. For *Annual Book of ASTM Standards* volume information, refer to the standard's Document Summary page on the ASTM website.

AVA Documents
Document Sharing Hub

Full document details: ASTM D8256-24

D873 Test Method for Oxidation Stability of Aviation Fuels (Potential Residue Method)
D1266 Test Method for Sulfur in Petroleum Products (Lamp Method)
D1298 Test Method for Density, Relative Density, or API Gravity of Crude Petroleum and Liquid Petroleum Products by Hydrometer Method
D2622 Test Method for Sulfur in Petroleum Products by Wavelength Dispersive X-ray Fluorescence Spectrometry
D2789 Test Method for Hydrocarbon Types in Low Olefinic Gasoline by Mass Spectrometry (Withdrawn 2023)[5]
D3237 Test Method for Lead in Gasoline by Atomic Absorption Spectroscopy
D3525 Test Method for Gasoline Fuel Dilution in Used Gasoline Engine Oils by Wide-Bore Capillary Gas Chromatography
D4052 Test Method for Density, Relative Density, and API Gravity of Liquids by Digital Density Meter
D4057 Practice for Manual Sampling of Petroleum and Petroleum Products
D4175 Terminology Relating to Petroleum Products, Liquid Fuels, and Lubricants
D4294 Test Method for Sulfur in Petroleum and Petroleum Products by Energy Dispersive X-ray Fluorescence Spectrometry
D4485 Specification for Performance of Active API Service Category Engine Oils
D5059 Test Methods for Lead and Manganese in Gasoline by X-Ray Fluorescence Spectroscopy
D5185 Test Method for Multielement Determination of Used and Unused Lubricating Oils and Base Oils by Inductively Coupled Plasma Atomic Emission Spectrometry (ICP-AES)
D6304 Test Method for Determination of Water in Petroleum Products, Lubricating Oils, and Additives by Coulometric Karl Fischer Titration

2.2 *ANSI Standard:*[6]

ANSI MC96.1 Temperature Measurement-Thermocouples

2.3 *Other ASTM Documents:*

ASTM Deposit Rating Manual 20 (Formerly CRC Manual 20)[7]
Data Acquisition and Control Automation II Task Force Report dated June 17th, 1997[8]
The Lubricant Test Monitoring System Sequence VH Test Control Chart Technique for Developing and Applying Severity Adjustments (SA)[8]

2.4 *Other Standards:*

API 1525 Bulk Oil Testing, Handling, and Storage Guidelines Documentation[9]

[5] The last approved version of this historical standard is referenced on www.astm.org.

[6] Available from American National Standards Institute (ANSI), 25 W. 43rd St., 4th Floor, New York, NY 10036, http://www.ansi.org.

[7] For stock #TMCMNL20, visit the ASTM website, www.astm.org, or contact ASTM Customer Service at service@astm.org.

[8] Available from the ASTM Test Monitoring Center, 203 Armstrong Drive, Freeport, PA 16229, http://www.astmtmc.org.

[9] Available from American Petroleum Institute (API), 200 Massachusetts Avenue, NW Suite 1100 Washington, DC 20001-5571, http://www.api.org.

3. Terminology

3.1 *Definitions:*

3.1.1 *air-fuel ratio, n—in internal combustion engines*, the mass ratio of air-to-fuel in the mixture being inducted into the combustion chambers.

3.1.1.1 *Discussion*—In this test method, air-fuel ratio (AFR), is controlled by the engine control module. **D4175**

3.1.2 *blowby, n—in internal combustion engines*, that portion of the combustion products and unburned air/fuel mixture that leaks past piston rings into the engine crankcase during operation. **D4175**

3.1.3 *clogging, n*—the restriction of a flow path due to the accumulation of material along the flow path boundaries. **D4175**

3.1.4 *cold-stuck piston ring, n—in internal combustion engines*, a piston ring that is stuck when the piston and ring are at room temperature, but inspection shows that it was free during engine operation.

3.1.4.1 *Discussion*—A cold-stuck piston ring cannot be moved with moderate finger pressure. It is characterized by a polished face over its entire circumference, indicating essentially no blowby passed over the ring face during engine operation.

3.1.5 *critical part, adj*—a component used in this test procedure, that has been identified as critical to the operations and/or performance of the test.

3.1.6 *debris, n—in internal combustion engines*, solid contaminant materials unintentionally introduced into the engine or resulting from wear. **D4175**

3.1.6.1 *Discussion*—Examples include such things as gasket material, silicone sealer, towel threads, and metal particles.

3.1.7 *filtering, n—in data acquisition*, a means of attenuating signals in a given frequency range. They can be mechanical (volume tank, spring, mass) or electrical (capacitance, inductance) or digital (mathematical formulas), or a combination thereof. Typically, a low-pass filter attenuates the unwanted high frequency noise. **D4175**

3.1.8 *hot-stuck piston ring, n—in internal combustion engines*, a piston ring that is stuck when the piston and ring are at room temperature, and inspection shows that it was stuck during engine operation.

3.1.8.1 *Discussion*—The portion of the ring that is stuck cannot be moved with moderate finger pressure. A hot-stuck piston ring is characterized by varnish or carbon across some portion of its face, indicating that portion of the ring was not contacting the cylinder wall during engine operation. **D4175**

3.1.9 *knock, n—in a spark ignition engine*, abnormal combustion, often producing audible sound, caused by auto-ignition of the air/fuel mixture. **D4175**

3.1.10 *out of specification data, n—in data acquisition*, sampled value of a monitored test parameter that has deviated beyond the procedural limits. **D4175**

3.1.11 *reading, n—in data acquisition*, the reduction of data points that represent the operating conditions observed in the time period as defined in the test procedure. **D4175**

AVA Documents
Document Sharing Hub

Full document details: ASTM D8256-24

3.1.12 *scoring, n—in tribology*, a severe form of wear characterized by the formation of extensive grooves and scratches in the direction of sliding. **D4175**

3.1.13 *scuffing, n—in lubrication*, damage caused by instantaneous localized welding between surfaces in relative motion that does not result in immobilization of the parts. **D4175**

3.1.14 *sludge, n—in internal combustion engines*, a deposit, principally composed of insoluble resins and oxidation products from fuel combustion and the lubricant, that does not drain from engine parts but can be removed by wiping with a cloth. **D4175**

3.1.15 *time constant, n—in data acquisition*, a value which represents a measure of the time response of a system. For a first order system responding to a step change input, it is the time required for the output to reach 63.2 % of its final value. **D4175**

3.1.16 *typical, adj*—an example, e.g., common engineering practice.

3.1.17 *varnish, n—in internal combustion engines*, a hard, dry, generally lustrous deposit that can be removed by solvents but not by wiping with a cloth. **D4175**

3.1.18 *wear, n*—loss of material from a surface, generally occurring between two surfaces in relative motion, and resulting from mechanical or chemical action, or a combination of both. **D4175**

3.2 *Definitions of Terms Specific to This Standard:*

3.2.1 *enrichment, n—in internal combustion engine operation*, a fuel consumption rate in excess of that which would achieve a stoichiometric air-to-fuel ratio.

3.2.1.1 *Discussion*—Enrichment is usually indicated by elevated CO levels and can also be detected with an extended range air/fuel ratio sensor.

3.2.2 *Lambda, n*—the ratio of actual air mass induced, during engine operation, divided by the theoretical air mass requirement at the stoichiometric air-fuel ratio for the given fuel.

3.2.2.1 *Discussion*—A Lambda value of 1.0 denotes a stoichiometric air-fuel ratio.

3.2.3 *low-temperature, light-duty conditions, n*—indicative of engine oil and coolant temperatures that average below normal warmed-up temperatures, and engine speeds and power outputs that average below those encountered in typical highway driving.

3.2.4 *ramping, n*—the prescribed rate of change of a variable when one set of operating conditions is changed to another set of operating conditions.

4. Summary of Test Method

4.1 Each VH test engine is assembled with many new parts and essentially all aspects of assembly are specified in detail.

4.2 The test stand is equipped to control speed, torque, AFR, and various other operating parameters.

4.3 The test is run for a total of 216 h, consisting of 54 cycles of 4 h each. Each cycle consists of three stages.

4.4 While the operating conditions are varied within each cycle, overall they can be characterized as a mixture of low-temperature and moderate-temperature, light and medium duty operating conditions.

4.5 To accelerate deposit formation, the level of oxides of nitrogen in the blowby and the rate of blowby into the crankcase are significantly increased. The fresh air breathing of the crankcase is eliminated and the oil and coolant temperatures are lowered to induce condensation of water and fuel.

4.6 The performance of the test engine oil is evaluated at the end of the test by dismantling the engine and measuring the level of engine deposit formation.

5. Significance and Use

5.1 This test method is used to evaluate an automotive engine oil's control of engine deposits under operating conditions deliberately selected to accelerate deposit formation. This VH test method was correlated with the previous VG test method, which was correlated with field service data, determined from side-by-side comparisons of two or more oils in police, taxi fleets, and delivery van services.

5.2 This test method, along with other test methods are used to define an engine oils minimum performance level necessary to meet certification requirements for API Category Specifications as outlined in Specification D4485. This test method may also be incorporated in automobile manufacturers' factory–fill specifications.

5.3 The basic engine used in this test method is representative of many that are in modern automobiles. This factor, along with the accelerated operating conditions, should be considered when interpreting test results.

6. Apparatus (General Description)

6.1 The VH test engine is a Ford, spark ignition, four stroke, eight-cylinder V configuration engine with a displacement of 4.6 L. Features of this engine include an overhead camshaft, a cross-flow fast-burn cylinder head design, two valves per cylinder and electronic port fuel injection. It is based on the Ford Motor Co. EFI Crown Victoria[10] passenger car engine with a displacement of 4.6 L.

6.2 Configure the test stand to accept the VH test engine. All special equipment necessary for conducting this test is listed herein.

6.3 Use the appropriate air conditioning apparatus to control the temperature, pressure, and humidity of the intake air.

6.4 Use an appropriate fuel supply system (Fig. 1).

6.5 The control and data acquisition system shall meet the requirements listed in Annex A6.

7. Apparatus (The Test Engine)

7.1 *Sequence VH Test Engine*—The test engine parts are supplied by Ford Motor Co. (A12.1). A detailed listing of all parts included in the kit is given in Annex A8.

[10] Ford Crown Victoria is a product of the Ford Motor Co., Dearborn, MI 48121.

AVA Documents
Document Sharing Hub

Full document details: ASTM D8256-24

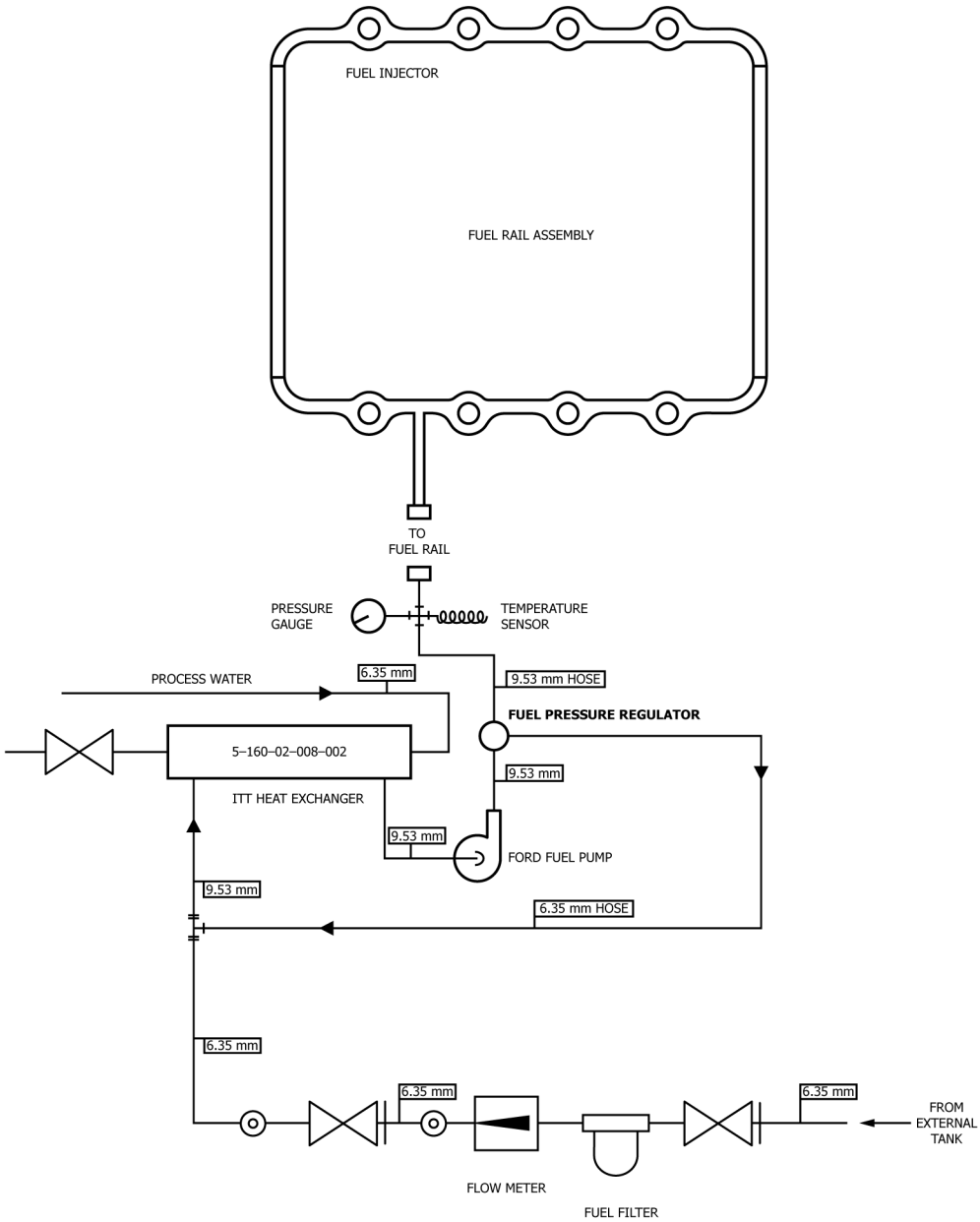

FIG. 1 Schematic of Engine Fuel System

7.1.1 Non-rated parts can be replaced during the test, provided the reason for replacement was not oil related.

7.2 *Required New Engine Parts*—Use the parts listed in the engine parts list (see Table A8.1). Use a new gasket kit for each test. Do not modify or alter test parts without the approval of the Sequence V Surveillance Panel. Use parts purchased in more than one batch on a first-in, first-out basis.

7.3 *Reusable Engine Parts*—The parts listed in Table A8.1 (Engine Dress Parts), (Stand Setup Parts), (Fasteners), and (Engine Finish Parts) can be reused (all of these can be used in numerous engine assemblies as long as they remain serviceable). Crankshaft, connecting rods, timing chain covers and cylinder heads may be used for multiple engine assemblies as long as they remain serviceable. Camshafts can be used for as many as four tests as long as they remain serviceable. As the block can be used for as many as four tests, damaged threads in the block can be corrected with commercially available thread inserts.

7.4 *Specially Fabricated Engine Parts*—The following subsections detail the specially fabricated engine parts required in this test method:

7.4.1 *Intake Air System (see* Fig. 2 *and* Figs. A7.1 and A7.2*)*—Intake air system shall use the parts shown in Table A8.1.

7.4.2 *Camshaft Baffles (see* Fig. A7.3*)*—These are fabricated for attachment to the underside of the rocker cover. The clearance between the edges of the baffle and the (rocker arm cover) RAC permits a limited splash flow of oil to the top of

AVA Documents
Document Sharing Hub

Full document details: ASTM D8256-24

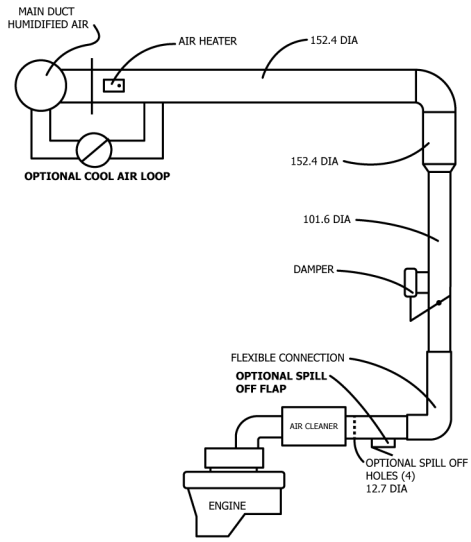

NOTE 1—Dimensions are in millimetres.

FIG. 2 Typical Test Stand Intake Air Supply System

the baffle and the RAC. Therefore, the dimensional accuracy of the baffle is important to minimize the influence on test severity. The camshaft baffle is available from the supplier listed in A12.2.

7.4.3 *Crankcase Oil Fill Port*—The crankcase oil fill port is located towards the rear of the left rocker cover. See item 8 and 9 on Fig. A7.4.

7.4.4 *Dipstick and Dipstick Tube (see Fig. A7.6)*—The dipstick has been modified for accurate oil level measurements. The dipstick and dipstick tube are calibrated. If either part is replaced, recalibrate the pair. Use the dipstick and dipstick tube available from the supplier listed in A12.2.

7.4.5 *Oil Pan*—Use a modified oil pan with removable baffles as shown in Fig. A7.7 from the supplier listed in A12.2.

7.4.6 *Exhaust Manifold*—The required exhaust manifolds (see A12.2), exhaust manifold spacer (see A12.3) and exhaust system are shown in Figs. A7.14-A7.16. A universal exhaust gas oxygen (UEGO) sensor is installed in the exhaust system after each exhaust manifold. Utilize the same wide band, heated oxygen sensors for both air fuel ratio control and measurement.

7.4.7 *Flywheel*—Use the flywheel listed in A12.2.

7.4.8 *Rocker Arm Cover (RAC)*—The RAC is fabricated from stainless steel and incorporates a water jacket and bolt bosses for the camshaft baffle (see Figs. A7.3-A7.5). The RAC, bolts, and washers supplier is listed in A12.2. As the RAC is used for multiple tests, leaks to the external cooling jacket may be repaired by welding or other suitable means. Do not modify the rated surfaces of the RAC.

7.4.9 *Oil Filter*—Use a 60 µm screen type oil filter with a bypass (see Fig. A7.8) available from the supplier listed in X2.1.11.

7.4.10 *Oil Pan Insulation*—The oil pan is covered with a fiberglass insulation to reduce the effects of ambient temperature variations. The insulation supplier is listed in A12.2.

7.5 *Special Engine Measurement and Assembly Equipment*—Items routinely used in laboratory and workshop are not included. Use 2000-2004 Crown Victoria Service Manual[11] and 2011 Crown Victoria Service Manual for assembly. Complete any assembly instructions not detailed in Section 7 according to the instructions in the Crown Victoria Service Manuals.

7.5.1 *Piston Ring Positioner*—Use the piston ring positioner to locate the piston rings from the cylinder block deck surface by 28.5 mm. This allows the compression rings to be positioned in a consistent location in the cylinder bore before measurement. Fabricate the positioner according to the details shown in Fig. A7.9.

7.5.2 *Piston Ring Grinder*—A ring grinder is required for adjusting ring gaps. A suitable ring grinder is noted in 7.8.5.1.

7.5.3 *PCV Valve Flow Rate Device:*

7.5.3.1 Use this device to verify the flow rate of the PCV valve before the test and measure the degree of clogging after the test. Fabricate the device according to the details shown in Fig. A7.10. The device shall have a full scale accuracy of 5 % and a resolution of 0.05 L/min (see 7.6.7).

7.5.3.2 Calibrate the flow rate device once every six months against a standard traceable to NIST.

7.5.4 A total of four master bores are required for verifying the cylinder bore measurement device, for determining ring gap increase for the rings in cylinders 1 and 8, and for determining piston to bore clearance. Master bores are sized according to piston oversize in Table 1.

7.5.4.1 Maintain the master bores in a temperature controlled room with identical conditions to build areas.

[11] Available from Ford and Lincoln Dealerships.

TABLE 1 Master Bore Sizes

For 0.125 mm piston	90.345 mm
For 0.25 mm piston	90.470 mm
For 0.375 mm piston	90.595 mm
For 0.50 mm piston	90.700 mm

AVA Documents
Document Sharing Hub

Full document details: ASTM D8256-24

7.5.5 *Oil Screen Blowdown Device*—Use the device available from the supplier listed in A12.3 to blow a controlled amount of compressed air across the oil screen to remove any oil that is retained on the oil screen after allowing it to drain.

7.5.6 Use NAT-50 or PDN-50[12,13] soap in automatic parts washers to clean Sequence VH engine parts. If using an ultrasonic cleaner, use solution 7 and solution B or a 50/50 Brulin US Solution of 815 GD and 815 QR-NF in a 12.5 % concentration. See X2.1.12.

7.5.6.1 Clean the block in a heated bath, a temperature-controlled automated parts washer, or ultrasonic cleaner before and after honing. Follow these suggested guidelines to ensure there is no rusting of the engine block after this process:

If Using a Heated Bath or an Automated Parts Washer:

(1) Use only NAT-50 or PDN-50 soap at a concentration of 7.3 kg of soap per 380 L of water. Change the soap and water solution at least after every 25 h of use.

(2) Control the water temperature at 60 °C ± 10 °C.

(3) Use only fresh tap water in the bath.

(4) Prior to installing the engine in the parts washer, ensure that all coolant passages are blocked off to prevent cleaning solutions from entering the coolant passages.

(5) Run the block through the cleaning cycle for a period of 30 min to 40 min.

(6) After the cycle is complete, immediately remove the block from the washer and spray it down with degreasing solvent.

(7) Wipe cylinder bores out with a lint-free towel.

(8) Spray engine block with a 50:50 mixture of build-up oil and degreasing solvent.

(9) Allow the block to cool to room temperature before honing the block.

If Using the Ultrasonic Cleaner Parts Washer:

(1) Based on bath volume, use solution 7 at a ratio of 132.5 mL (4.48 oz) per 3.785 L (1 gal) of water plus solution B at a ratio of 11 mL (0.38 oz) per 3.785 L (1 gal) of water. As an alternative, a 50/50 Brulin US Solution of 815 GD and 815 QR-NF may be utilized in a 12.5 % concentration.

(2) Use only fresh tap water in the bath.

(3) Control the solution-in-water temperature at 65 °C ± 5 °C.

(4) Prior to installing the engine in the parts washer, ensure that all coolant passages are blocked off to prevent cleaning solutions from entering the passages.

(5) Run the block through the cleaning cycle for a period of 60 min.

(6) After the cycle has completed, immediately remove the block from the washer and thoroughly spray clean the block with hot water.

(7) Replace the mixture of the two solutions-in-water with a new mixture at least after every 25 h of use.

(8) Spray engine block with a 50:50 mixture of EF-411 and degreasing solvent.

(9) Allow the block to cool to room temperature before honing the block.

7.5.7 *Cylinder Hone*—Use a Sunnen CV-616 for cylinder bore resizing and finishing.[14,13]

7.5.8 *Connecting Rod Heater*—The piston pins are fixed to the connecting rods with an interference fit. A connecting rod heater[15,13] is required to facilitate installation of the piston pins and prevent piston distortion.

7.6 *Miscellaneous Engine Components—Preparation:*

7.6.1 *Engine Build-Up and Measurement Area-Environment*—The ambient atmosphere of the engine buildup and measurement areas shall be reasonably free of contaminants. A relatively constant temperature (within ±3 °C) is necessary to ensure acceptable repeatability in the measurement of parts dimensions. To prevent moisture forming on cold engine parts that are brought into the buildup or measurement areas, maintain the relative humidity at a nominal maximum of 50 %.

7.6.2 *Intake Manifold and Throttle Body:*

7.6.2.1 Block coolant bypass port in intake manifold by tapping the hole and installing a ½ in. NPT pipe plug. Replace the idle air bypass motor with the idle load control system. A schematic of the system is shown in Fig. A7.12. Block off the EGR port on the back of the throttle body plenum (block off plate shown in Fig. A7.13) drill and tap the block off plate and install fitting for MAP port.

7.6.2.2 Clean the butterfly and bore of the throttle body with solvent (7.7.1) and air-dry before each test. Do not disassemble the throttle body as this will cause excessive wear on the components.

7.6.2.3 There is no specific life for the throttle body. However, the clearance between the bore and the butterfly will eventually increase and render the body unserviceable. When the clearance becomes too great to allow control of speed, torque, and air-fuel ratio during Stage III, discard the throttle body.

7.6.3 *Rocker Arm Cover:*

7.6.3.1 Before each test, inspect the coolant jacket. If a deposit or film is present, then clean the RAC coolant jacket with a commercially available de-scaling cleaner, neutralizer, and inhibitor (8.4.4.1). An example of an acceptable cleaner is detailed in 7.7.3.

7.6.3.2 Submerge the RAC in agitated organic solvent (see 7.7.2) until clean (approximately 1 h). Rinse the parts thoroughly with hot water (> 60 °C). Rinse the RAC with degreasing solvent (7.7.1) and allow to air-dry. Inspect the appearance of the inside of the RAC. If the before test rating is less than ten on the ASTM varnish rating scale (ASTM Deposit Rating Manual 20), polish the RAC with Green Scotch Brite General

[12] The sole source of supply of the soap (NAT-50 or PDN-50) known to the committee at this time is Better Engineering Manufacturing, 8361 Town Court, Baltimore, MD 21236.

[13] If you are aware of alternative suppliers, please provide this information to ASTM International Headquarters. Your comments will receive careful consideration at a meeting of the responsible technical committee,[1] which you may attend.

[14] The sole source of supply of the Sunnen CV-616 honing machine known to the committee at this time is Sunnen Inc., 7910 Manchester, St. Louis, MO 63143.

[15] The sole source of supply of the connecting rod heater (Sunnen Model CRH-50) and pin installation tool known to the committee at this time is Sunnen, Inc., 7910 Manchester, St. Louis, MO 63143.

AVA Documents
Document Sharing Hub

Full document details: ASTM D8256-24

Purpose Hand Pad #96[16] to achieve a dull finish. Rinse with degreasing solvent (7.7.1) and allow to air-dry before use.

7.6.4 *Camshaft Baffle*—Submerge the camshaft baffles in agitated organic solvent (see 7.7.2) until clean (approximately 1 h). Rinse the parts thoroughly with hot water (> 60 °C). Rinse the camshaft baffles with degreasing solvent (7.7.1) and allow to air-dry. Inspect the appearance of the top surface of the camshaft baffle. If the before test rating is less than ten on the ASTM varnish rating scale (ASTM Deposit Rating Manual 20), polish the camshaft baffle with Scotch Brite General Purpose Hand Pad #96 to achieve a dull finish. Rinse with degreasing solvent (7.7.1) and allow to air-dry before use.

7.6.5 *Oil Pan*—Submerge the oil pan in agitated organic solvent (see 7.7.2) until clean (approximately 1 h). Rinse the part thoroughly with hot water (> 60 °C). Rinse the oil pan with degreasing solvent (7.7.1) and allow to air-dry.

7.6.6 *Oil Pan Baffle*—Submerge the oil pan baffle in agitated organic solvent (see 7.7.2) until clean (approximately 1 h). Rinse the part thoroughly with hot water (> 60 °C). Rinse the oil pan baffle with degreasing solvent (7.7.1) and allow to air-dry.

7.6.7 *PCV Valve*—Measure and record the flow rates of the PCV valve with the calibrated flow device described in 7.5.3 and Fig. A7.10. Measure the flow rate at 25 kPa and 60 kPa vacuum. Because of the hysteresis in the PCV valve spring, make the vacuum adjustments in one direction only. Measure the flow rate twice and average the readings. Reject any PCV valve that does not exhibit an average flow rate of 90 L/min to 140 L/min at 25 kPa and 30 L/min to 50 L/min at 60 kPa.

7.6.8 *Water Pump Drive System*—Use only the pulleys needed to drive the water pump, crankshaft pulley, water pump, grooved idler and tensioner (see Table A8.1), and a five or six groove belt, 956 mm in length to ensure that the water pump rotates at the proper speed and direction.

7.6.9 *Front Cover*—Modify front cover to facilitate installation of tensioner, idler, and water pump drive belt. Since the belt is routed differently from the stock location some bolt bosses may need to be altered to clear the shorter belt and the tensioner. These bolt bosses are used to attach the front end accessory drive components that are not used for this test.

7.6.10 *Oil Separators*—Use a specified oil separator obtained from the supplier in A12.6 parts list. Clean the interior with degreasing solvent (7.7.1) and allow to air-dry prior to each test.

7.6.11 *Timing Chain Cover*—Submerge the timing chain cover in agitated organic solvent (see 7.7.2) until clean (approximately 1 h). Rinse the part thoroughly with hot water (> 60 °C). Clean with degreasing solvent (7.7.1) and allow to air-dry.

7.7 *Solvents and Cleaners Required*—No substitutions for 7.7.1 – 7.7.6 are allowed. (**Warning—**Use adequate safety provisions with all solvents and cleaners. See Annex A5.)

7.7.1 *Solvent*—Use only mineral spirits meeting the requirements of Specification D235, Type II, Class C for Aromatic Content 0 % to 2 % by volume, Flash Point (61 °C, min) and Color (not darker than +25 on Saybolt Scale or 25 on Pt-Co Scale). (**Warning—**Combustible. Health hazard.) Obtain a Certificate of Analysis for each batch of solvent from the supplier.

7.7.2 *Organic Solvent,* Penmul L460. (**Warning—**Combustible. Health hazard.)[17,13]

7.7.3 *Dearsol 134 Acidic Cleaner,*[18,13] *with Inhibitor*, RAC cooling jacket internal cleaner. (**Warning—**Combustible. Health hazard.)

7.7.4 *Cooling System Cleaner,* Dupont or equivalent, for cleaning cooling system components external to the engine. (**Warning—**Caustic. Health hazard.)

7.7.5 *Parts Cleaning Soap,* NAT-50 or PDN-50 have been found to be acceptable. (**Warning—**Health hazard.)

7.7.6 *Ultrasonic Cleaner,* Tierra Tech ultrasonic solution 7 and B available from supplier shown in X2.1.12 or a 50/50 Brulin US Solution of 815 GD and 815 QR-NF in a 12.5 % concentration.

7.7.6.1 Steel and cast iron parts may be cleaned using the ultrasonic cleaner without restrictions. Aluminum parts may only be cleaned for 30 min or less. The engine front cover may not be cleaned using the ultrasonic cleaner.

7.8 *Assembling the Test Engine—Preparations*—Use the test engine parts obtained from the supplier in 7.1. Assemble the engine according to the 2011 Crown Victoria Workshop Manual for long block assembly through the intake elbow. Throttle body, fresh air tube, airbox and water pump are a combination of 2011 and 2004 components.

7.8.1 *Parts Selection*—Instructions concerning the use of new or used parts are detailed in 7.1.1, 7.2, and 7.3.

7.8.2 *Sealing Compounds*—Use a silicon-based sealer as needed between the rear seal housing-cylinder block, the cylinder block-cylinder head-front cover interfaces, cylinder head-front cover-rocker cover interfaces, and cylinder block-front cover-oil pan interfaces.

7.8.2.1 Use silicon-based sealer sparingly since it can elevate the indicated silicon content of the used oil.

NOTE 1—Non-silicon liquid or tape thread sealers can be used on bolts and plugs.

7.8.3 *Gaskets and Seals*—Install new gaskets and seals during engine assembly.

7.8.4 *Block Preparations*—Inspect block, including oil galleries for debris and rust. Remove any debris or rust that is found. Remove oil gallery plugs. Removal of coolant jacket plugs is left to the discretion of the laboratory. Enlarge the chamfers around the top of the cylinder bore. Spray the block with degreasing solvent (see 7.7.1). Spray block with a 50/50 mixture of degreasing solvent (see 7.7.1) and EF-411.[19,13] Install the stress plates with cylinder head fasteners and torque to 37 N·m to 43 N·m with an additional 180° in two 90°

[16] Scotch Brite is a trademark of 3M Corporate Headquarters, 3M Center, St. Paul, MN 55144-1000.

[17] The sole source of supply of Penmul L460 known to the committee at this time is Penetone Corp., 8201 4th Street, Unit G, Downey, CA. 90241.

[18] The sole source of supply of Dearsol 134 Acidic Cleaner known to the committee at this time is Dearborn Div., subsidiary of W. R. Grace and Co., 300 Genesee St., Lake Zurich, IL 60047.

[19] The sole source of supply of Mobil EF-411 oil known to the committee at this time is Mobil Oil Corp., 3225 Gallows, Fairfax, VA 22037.

AVA Documents
Document Sharing Hub

Full document details: ASTM D8256-24

rotation increments. Head bolts may be used for a maximum of five times. Install the main bearing caps and torque to 40 N·m, with an additional 90° rotation. Install the jackscrews and torque to 8 N·m to 11 N·m.

7.8.4.1 *Honing:*

(1) Install the block in the honing machine. Use a Sunnen CV-616 honing machine to hone the block. Install the block with the right cylinder bank on the outside and the front of the block to the right. Verify the honing oil has been changed within the past 15 h, and change if necessary.

(2) Set the honing machine to flow Sunnen LP8X fluid at a nominal rate of 7 L/min. Set the feed rate to 4 with 57 strokes per minute and spindle speed of 170 r/min. Set the stroke for 133.35 mm and lower the block for 10 mm over stroke.

(3) Install EHU512 stones. Typical pressures of 25 to 40 units have found to be acceptable. Hone the right bank in the following order, cylinder 1, 3, 4 and 2. Hone the left bank in the following order, Cylinder 7, 5, 8 and 6. Following this order will minimize the possibility of overheating one area of the block. The block may be rotated in the honing machine and does not have to be removed to hone the other bank.

(4) Install JHU725 stones and hone for approximately five strokes at 20 to 25 units of pressure in the order described in step (3).

(5) Install a plateau hone brush and hone at 25 to 30 units of pressure to obtain a surface finish of 8 µm to 13 µm. Typically 45 strokes have provided acceptable results.

(6) Measure the cylinder bore using a bore ladder shown in Fig. A7.28. Measure bore both longitudinally and transversely. Determine the bore diameter for piston clearance purposes by adding the middle and bottom transverse bore measurements and dividing by two. Measure the piston skirt 42 mm from the top of the piston. Subtract this value from the bore measurement and verify that the piston-to-bore clearance is within 0.020 mm to 0.046 mm. Re-hone the block or choose a different diameter piston to obtain this clearance.

(7) Determine bore taper by measuring the difference between top-to-bottom, top-to-middle and middle-to-bottom, transversely. Record the maximum value of the readings Verify that the maximum taper does not exceed 0.006 mm. Determine out-of-round by subtracting the difference between the transverse and longitudinal bore measurements at the top, middle and bottom. Record the maximum value. Verify that the cylinder bore out-of-round does not exceed 0.020 mm.

7.8.4.2 *Post-honing Cleaning:*

(1) Remove the block from the honing machine. Remove the stress plates, jackscrews, main bearing bolts and caps. Remove jackscrews from the main bearing caps.

(2) Clean with degreasing solvent (see 7.7.1).

(3) Place block in dishwasher type cleaning machine (see 7.5.6) and wash using soap (7.7.5) for 30 min at 60 °C.

(4) Spray block with 50/50 solution of EF-411 and degreasing solvent (see 7.7.1).

7.8.4.3 *Crankshaft Installation:*

(1) If the crankshaft has been used previously, soak the crankshaft in organic solvent (see 7.7.2) for a minimum of 24 h.

(2) Spray the crankshaft with degreasing solvent.

(3) Measure the main journals and verify that the diameters are 67.483 mm to 67.503 mm.

(4) Measure the connecting rods journals and verify that the diameters are 52.988 mm to 53.003 mm.

(5) Install the main bearings.

(6) Install the main bearing caps and torque to 40 N·m, with an additional 90° rotation.

(7) Install the jack screws and torque to 9 N·m to 11 N·m.

(8) Install the jack screw bolts and torque to 19 N·m to 23 N·m.

7.8.4.4 *Piston Installation:*

(1) Examine pistons for any staining, defects, damage, etc. Discard any pistons that are stained, damaged, or unusable.

(2) Install the piston on the connecting rod using Sunnen Model CRH-50 connecting rod heater. Orient the notch in the piston facing forward and the bump in the connecting rod facing towards the rear of the engine. Refer to Fig. A7.11.

7.8.5 *Piston Rings:*

7.8.5.1 *Ring Gap Adjustment:*

(1) Cut the top and second compression ring gaps as required to obtain the specified blowby flow rate, using the Sanford Piston Ring Grinder[20,13] and record new ring gap(s) on any ring(s) adjusted. Enter the new dimension(s) on the Supplemental Operational Data sheets. Typical forms for recording these dimensions are shown in Appendix X1. Second ring gap shall be between 0.045 mm and 0.055 mm larger than the top ring gap.

7.8.5.2 *Piston Ring Cutting Procedure:*

(1) Cut the ring to the required gap using the ring cutting burr[21,13] rotated at a rated speed of 3450 r/min. Remove equal amounts from both sides of the gap. Make final cuts on the down stroke only. The ring is cut with a maximum increment of 0.125 mm until the desired ring gap is achieved.

(2) After the rings are cut remove the ring from the cutting tool, deburr using a Sunnen soft stone[22,13] and wipe with a dry towel.

7.8.5.3 *Installation:*

(1) Install the oil control rings and the compression rings on the pistons with the gaps located over the piston pin. Position the gaps at approximately 180° intervals, with the top compression ring gap toward the rear. Install the rings using a ring spreader tool, keeping the rings' surfaces parallel to the ring groove in the piston.

(2) If any rings require replacement, then measure and record the new ring gap(s) and ring side clearance(s). Calculate ring side clearance by determining the difference between the ring groove width and the associated ring width.

7.8.6 *Cylinder Bore Measurements*—Measure the cylinder 1 and 8 cylinder bores with the bearing caps in place. Clean the bores with a dry rag. The bores shall be clean and dry when they are measured. Use a bore gauge micrometer to determine

[20] The sole source of supply of the Sanford Piston Ring Grinder known to the committee at this time is Sanford Mfg. Co., 300 Cox St., P.O. Box 318, Roselle, NJ 07203.

[21] The sole source of supply of the 3/16 in. carbide ring cutting burr, No. 74010020 known to the committee at this time is M. A. Ford.

[22] The sole source of supply of Sunnen soft stone, No. JHU-820 known to the committee at this time is Sunnen, Inc., 7910 Manchester St., St. Louis, MO 63143.

AVA Documents
Document Sharing Hub

Full document details: ASTM D8256-24

the diameter of cylinder 1 and 8 at the top, middle and bottom of the second ring travel in the transverse direction.

7.9 *Assembling the Test Engine—Installations*—Assemble the engine according to the instructions in the service manual unless specified herein.

7.9.1 *Intake Manifold*—Block the coolant bypass port in the intake manifold at the thermostat housing (7.6.2.1).

7.9.2 *Piston Installation*—Install pistons in proper cylinders, taking care to ensure rings are not damaged during installation. Wipe the cylinders with EF-411. Install the pistons and connecting rods with the notches facing forward. Install the rod bearing caps and torque to 40 N·m to 45 N·m with an additional 90° rotation.

7.9.3 *Oil System Components*—All oil system components in the engine are production configuration with the exception of the oil pan that contains removable baffles.

7.9.4 *Cylinder Head Installation*—Cylinder heads are obtained from Ford and modified by the supplier in A12.5. Heads may be used for multiple tests, as long as they remain serviceable.

(1) Disassemble heads and inspect for any debris or other deleterious materials and remove as necessary.

(2) If the cylinder heads have not been previously used, spray the cylinder heads with degreasing solvent (see 7.7.1) and tap oil gallery port in back of cylinder head to accept a threaded pipe plug. If the cylinder heads have been used previously, soak in organic solvent (see 7.7.2) for 24 h, place the cylinder heads in the dishwasher type cleaning machine (7.5.6) using soap (7.7.5) at 60 °C for 30 min. Promptly remove the cylinder head from the cleaning machine and spray with a 50/50 mixture of EF-411 and degreasing solvent (7.7.1).

(3) Determine valve guide clearance at the top and middle of the heads on the transverse side of the guide. Reject any heads that exceed 0.020 mm to 0.069 mm for intake and 0.046 mm to 0.095 mm for exhaust.

(4) Assemble the cylinder heads in accordance with the manual. Verify valves are properly seated. The method is left at the discretion of the laboratory.

(5) Install camshaft bearings. Camshafts can be installed at this time. Camshaft bearings are obtained from the supplier listed in A12.3.

(6) Use Motorcraft Gasket Maker Ta-16[11] or equivalent around oil passage on the bolting interface between cam cap and head journal during assembly helps to create better sealing to cover minor surface imperfections that may cause reduction in oil head pressure.

7.9.4.1 Modify heads to accept cam bearings, and new valve guides if they are worn beyond the service limits, by the source listed in A12.5. After use if cylinder heads require decking they should be taken out of service and no longer be used for VH testing.

(1) Conduct a successful reference oil test prior to using these heads for all testing.

7.9.5 *Camshaft and Related Components*—Install the camshaft and gears in the same manner as described in the service manual.

7.9.5.1 Install timing chain tensioner on the cylinder head.

7.9.5.2 Prior to the timing chain installation, clock the crankshaft keyway at 315° of crankshaft angle (TDC of piston No. 1) as described in the service manual.[11] Rotate the crankshaft clockwise only, when viewed from the front.

7.9.5.3 When viewed from the rear, maintain the camshaft D-slot shall at a 90° clocked position relative to the cam cover rail.

7.9.5.4 When installing the timing chains ensure that the timing marks (mentioned above) remain aligned. Install L.H. crankshaft sprocket with timing chain on the crankshaft. Drape the L.H. timing chain over camshaft sprocket. The timing chain shall hang below the tensioner dowel.

7.9.5.5 Repeat the procedure in 7.9.5.3 for the right hand timing chain. After installation, the timing chain shall hang between the chain guide and the tensioner dowel.

NOTE 2—There should be a minimum of chain slack on the tension side between the two sprockets.

7.9.6 *Rocker Arm Cover and Baffle*—Fasten the camshaft baffle to the rocker cover. Cut off the tabs from the rocker cover gasket and install it in the gasket groove on cover rail. Install rocker arm cover on the cylinder head and confirm that the baffle does not contact any valve train components. Using new rubber washers on the bolts, torque the bolts to 8 N·m to 12 N·m (the rubber washers are not reusable). The two rocker covers are different, ensure that the correct cover is installed on the correct head (Figs. A7.4 and A7.5).

7.9.7 *Oil Pan, Baffles, and Insulation*—Install front and rear oil pan baffles to the oil pan as shown in Fig. A7.7. Install front baffle first. Install the oil pan according to the procedure in the service manual. Install the oil pan insulation over the oil pan.

7.9.8 *Water Pump, Water Pump Drive*—Install the water pump, water pump pulley tensioner, idler pulley and the crankshaft pulley (see 7.6.8) according to the service manual. These are the only components needed to drive the water pump. All other production front end accessory drive components are not used. See Fig. 3. Some labs have experienced slipping of the belt on the water pump pulley, sometimes more with a new pulley. The belt contact surface of the water pump pulley may be lightly sanded to increase the surface roughness to prevent slipping of the belt on the pulley. Ensure the entire circumference is sanded evenly.

7.10 *Engine Installation on the Test Stand*—Functions that are to be performed in a specific manner or at a specific time in the assembly process are noted.

7.10.1 *Mounting the Engine on the Test Stand*—Mount the engine on the test stand so that the flywheel friction face is 4.0° ± 0.5° from vertical, with the front of the engine higher than the rear. The engine mounting system should be designed to minimize engine vibration at 700 r/min to 2900 r/min. Couple the engine and damper, if used, directly to the dynamometer through a driveshaft. The engine cannot be used to drive any external engine accessory.

7.10.2 *Exhaust System:*

7.10.2.1 The required exhaust manifold, a typical exhaust system, and O_2 sensor and thermocouple fittings are illustrated in Figs. A7.14-A7.16. Exhaust components shown in Fig. A7.16 should be constructed of either solid or bellows pipe/tubing. Other type flexible pipe is not acceptable.

AVA Documents
Document Sharing Hub

Full document details: ASTM D8256-24

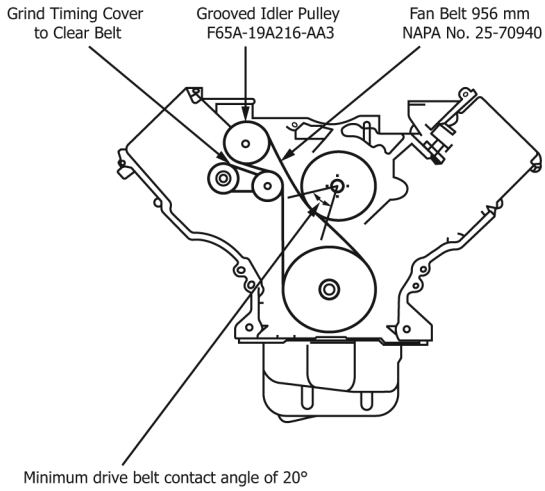

FIG. 3 4.6 L Water Pump Drive Arrangement

7.10.3 *Oil Dipstick and Tube*—Install modified oil dipstick and dipstick tube, described in 7.4.4, in the engine block at the production location and attachment points.

NOTE 3—The intake manifold, the rocker arm covers, and the exhaust manifolds can be installed after the engine is installed on the test stand.

7.10.4 *Fuel Management System:*

7.10.4.1 *Fuel Rail Injectors:*

(1) The fuel injectors can be used for multiple tests providing they meet the requirements delineated in Annex A15. Fuel injectors that have caused misfires in previous tests should be cleaned before reuse. Commercial injector cleaning fluids and flow benches are available from various manufacturers. *Do not use injector cleaning fluids while operating the engine.*

(2) Inspect the O-rings to ensure they are in good condition and will not allow fuel leaks. Install the fuel injectors into the fuel rail and into the intake manifold.

7.10.4.2 *Electronic Engine Control (EEC) System*—The fuel injector operation, cylinder firing, pulse width, ignition timing, and so forth, are controlled by the specified EEC. The EEC is available from the supplier listed in A12.2.

(1) The EEC power shall come from a battery 13.5 V ± 1.5 V or a power supply that does not interrupt/interfere with proper EEC operation. Connect the EEC battery/power supply to the engine wire harness with an appropriate gauge wire of the shortest practical length so as to maintain a D.C. voltage of 12 V to 15 V at the ECM pins, or as read by a diagnostic tool, and minimize EEC electrical noise problems. Ground the EEC ground wire to the engine. From the same ground point, run a minimum two gauge wire back to the battery negative to prevent interruption/interference of the EEC operation. The power supply can also be used for the Lambda measuring devices.

7.10.5 *Spark Plugs*—Install new Motorcraft AGSF-32-PM spark plugs that have been gapped to 1.37 mm. Torque the spark plugs to 9 N·m to 12 N·m. Install the spark plug wiring harness. Do not use anti-seize compounds on spark plug threads.

NOTE 4—The components used in the ignition system do not require modification.

7.10.6 *Crankcase Ventilation System*—The crankcase ventilation system is a closed system allowing blowby to be vented from the crankcase and drawn into the intake manifold. A description of the system operation is shown in Fig. 4. Install PCV system components and hoses as shown in Fig. A7.17.

7.10.6.1 *Oil Separator and PCV Valve*—Use two clean oil separators and a new PCV valve listed in the parts list in Annex A8 and A12.6. Oil separators can be cleaned by soaking in degreasing solvent and reused as long as they remain serviceable.

7.10.6.2 *Three-Way Valve*—Install a clean three-way valve and attach the PCV valve hose. Install the remaining PCV valve hose between the three-way valve and the intake manifold (see Fig. 4 and Fig. A7.17). Do not allow the hose to flatten at the bend after installation.

7.10.7 *Intake Air Components*—Install the throttle body, throttle body spacer, fresh air tube, air cleaner assembly, and new air filter. Modify the air cleaner assembly to accept fittings for inlet air temperature thermocouple, pressure tap and fresh air, as shown in Fig. A7.1. VG or VH Throttle body can be used.

7.10.8 *External Hose Replacement*—Inspect all external hoses used on the test stand and replace any hoses that have become unserviceable. Check for internal wall separations that could cause flow restrictions. Check all connections to ensure security.

7.10.9 *Wiring Harness*—There are two sources for harnesses, original Sequence VG dyno harness and engine harness in A12.2 and a single harness that incorporates both these from A12.3. For the VG harnesses, the two wiring harnesses used on the test stand are a dynamometer harness that connects to the stand power and EEC and an engine harness. The VG engine wire harness, F2AB-12A522-AC, must be modified to fit the Sequence VH intake.

7.10.9.1 *VG Engine Harness Modification and Installation*—Remove the plastic shroud (visible in Fig. A7.2)

AVA Documents
Document Sharing Hub

Full document details: ASTM D8256-24

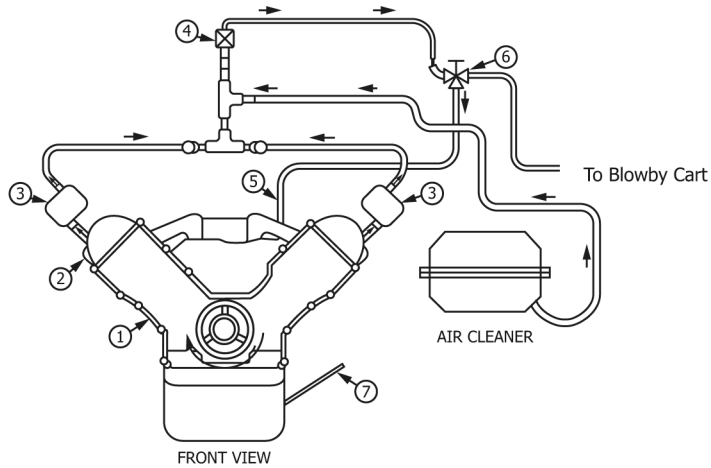

NOTE 1—Legend:
(1) Blowby flows through 6 oil drain back passages in cylinder block and head and through the front cover.
(2) Cam baffle shields cover from oil.
(3) Oil separator prevents loss of oil into PCV valve.
(4) PCV valve flows approximately 120 L/min. Blowby rate is (60 to 70) L/min.
(5) Air vent provides balance of flow by PCV valve. When excessive plugging of the PCV valve occurs excess blowby is vented to the air cleaner.
(6) Three-way ball valve routes blowby to the intake manifold and provides a connection point for blowby measurement apparatus.
(7) Dipstick tube is location for crankcase pressure measurement.
(8) Under normal flow conditions blowby is routed to the engine air intake.

FIG. 4 Functional Description of Closed Crankcase Ventilation System

and re-route the wires for the injectors and the coolant temp sensor so it goes around the throttle body elbow. The original throttle position sensor and coolant temperature sensor connectors must be replaced with new style pigtail connectors and the length of wire added to accommodate the position of the wire harness and sensors. See Figs. A7.29-A7.37 for harness connector changes and installation. If VG throttle body is used throttle position sensor connector does not need to be changed.

8. Engine Fluids (Supply/Discharge Systems)

8.1 *Intake Air*—Condition the intake air to 30 °C ± 0.5 °C, 11.4 g/kg ± 0.8 g/kg humidity, and pressurized to 0.05 kPa ± 0.02 kPa.

8.1.1 *Capacity*—The supply system shall be capable of delivering 110 L/s of conditioned air, while maintaining the intake/air parameters detailed in Table 2. The test stand intake air duct system is shown in Fig. 2.

8.1.2 *Dew Point*—The dew point may be measured in the main system duct or at the test stand. If the dew point is measured in the main system duct, verify the dew point periodically at the test stand. Maintain the duct surface temperature above the dew point temperature at all points downstream of the humidity measurement point to prevent condensation and loss of humidity level.

8.2 *Fuel and Fuel System:*

8.2.1 *System Description*—A schematic diagram of a non-return fuel supply system is shown in Fig. 1. Deliver the fuel to a high-pressure pump (Ford P/N E7TF-9C407 or E7TC-9C407), that boosts the pressure and supplies the fuel to the fuel rail. Provide a cooling loop for the fuel as shown. Regulate the fuel pressure at the fuel rail using a Paxton regulator or equivalent. Maintain a pressure of 250 kPa ± 20 kPa at the rail. This is a non-return fuel system, the fuel rail is supplied the required fuel and pressure using the 3-way Paxton regulator. The excess fuel leaves the regulator and is cooled in the re-circulating loop shown in Fig. 1. The excess fuel is mixed with the incoming fuel before the pump but after the fuel meter. The heat exchanger provides a consistent temperature at the rail.

TABLE 2 Sequence VH Operating Targets

Condition	Stage I	Stage II	Stage III
Duration, min	120	75	45
Engine speed, r/min	1200 ± 5	2900 ± 5	700 ± 25
Engine power, kW	record	record	1.30 ± 0.2
Manifold abs press, kPa (abs)	69 ± 0.2	66 ± 0.2	record
Engine oil in, °C	68 ± 0.5	100 ± 0.5	45 ± 1
Engine coolant out,° C	57 ± 0.5	85 ± 0.5	45 ± 1
Engine coolant flow, L/min	48 ± 2	118 ± 2	28 ± 2
Engine coolant pressure, kPa (gauge)	70 ± 10	70 ± 10	70 ± 10
RAC coolant in, °C	29 ± 0.5	85 ± 0.5	29 ± 1
Rocker cover flow, L/min	15 ± 1	15 ± 1	15 ± 1
Intake, air, °C	30 ± 0.5	30 ± 0.5	30 ± 0.5
Intake air press, kPa (gauge)	0.05 ± 0.02	0.05 ± 0.02	0.05 ± 0.02
Lambda	1.00 ± 0.05	1.0 ± 0.05	0.75 ± 0.03
Blowby flow rate, avg, L/min	—	60-70	—
Intake air humidity, g/kg	11.4 ± 0.8	11.4 ± 0.8	11.4 ± 0.8
Exhaust back pressure, kPa abs	104 ± 2	107 ± 2	—[A]
Fuel flow, kg/min	record	record	record

[A] Set to atmospheric or barometric conditions.

8.2.2 *Controls*—Maintain the fuel temperature to the fuel rail below 50 °C. To ensure good atomization of the fuel, maintain 250 kPa ± 20 kPa fuel pressure to the fuel rail. In addition, the fuel pressure should be constant at all steady-state conditions to ensure good speed, power, and air-fuel ratio control.

8.2.3 *Fuel Volume Required*—Approximately 3300 L of sequence VH unleaded gasoline are required for each test.

AVA Documents
Document Sharing Hub

Full document details: ASTM D8256-24

8.2.4 *Fuel Batch Approval Process*—Obtain fuel from an approved fuel supplier listed in X2.1.5.[23] Each new batch of fuel is approved by the following process:

8.2.4.1 A fuel batch having a minimum volume of 350 000 gal must be blended before a fuel approval matrix may begin.

8.2.4.2 A sample of this fuel is shipped to the designated laboratories. A statistically designed test program is completed using reference oils selected by the SP. Historically, the test matrix has contained at least sixteen full-length tests and has been designed by the Sequence V Surveillance Panel. If a batch needs to be re-blended, the matrix must start over. The entire test matrix must be run on the same volume of fuel which is approved by the SP for industry testing. The SP reviews the test results and if acceptable, authorizes the fuel supplier to notify potential purchasers of the approval status of the fuel batch. The TMC then publishes an information letter showing the batch number/identification of the approved fuel batch and the supplier, with contact information.

8.2.4.3 Add fuel from a new batch to a laboratory's fuel tank when the current fuel level is below 10 % of the final fuel (new and previous) mixture's total volume.

8.2.5 *Fuel Batch Analysis*—Upon receipt from the supplier, it is the responsibility of the laboratory to analyze each fuel shipment to determine the value of the parameters shown in Table 3 (except sulfur, oxidation stability, and distillation). Compare the results to the values obtained by the supplier on that particular batch. The results should be within the specification band shown in Table 3 beside each parameter. This provides a method to determine if the fuel batch is contaminated or has aged prematurely. If any results fall outside the tolerances shown in Table 3, the laboratory should contact the TMC for help in resolving the problem. One potential method for resolving the problem is to obtain an analysis at the fuel supplier's laboratory of the *as received* fuel sample.

8.2.6 *Laboratory Storage Tank Fuel Analysis*—Analyze the fuel stored at laboratories and for calibrated Sequence VH tests quarterly. Laboratories should take composite samples using Table 1 in Practice D4057, as a guideline. The fuel supplier shall have the capability to analyze the fuel samples using the test methods specified in Table 3 and this section. The fuel supplier shall provide an adequate supply of fuel sample containers with packaging and pre-addressed return labels to each Sequence VH laboratory. Upon receipt of all fuel samples required in 8.2.6 from the laboratories, the fuel supplier shall perform the following analyses, report the results to the submitting laboratory, and tabulate the results in a database.

Reid vapor pressure (Test Method D323)
API gravity (Test Method D287 or D1298)
Distillation (Test Method D86)
Lead (Test Method D3237 or D5059)
Washed gums (Test Method D381)
Unwashed gums (Test Method D381)

8.2.6.1 When results from the physical and chemical tests listed above appear to differ significantly from the expected results, analyze a second sample, or conduct the following tests, or do both:

Hydrocarbon speciation (Test Method D2789)
Oxidation stability (Test Method D525)
Potential gums (Test Method D873)

8.2.6.2 The fuel supplier shall also issue a quarterly analysis of the fuel from the main storage tank, which should represent normal aging. The analysis shall include the parameters in Table 3.

8.2.6.3 Forward the results of the analyses performed in 8.2.6 and 8.2.6.1 to the TMC for inclusion in the appropriate data base.

8.2.7 *Fuel Batch Shipment and Storage*—Ship the fuel in containers with the minimum allowable venting as dictated by all safety and environmental regulations, especially when shipment times are anticipated to be longer than one week. Store the fuel following all applicable safety and environmental regulations.

8.3 *Engine Oil and Engine Oil System:*

8.3.1 *Test Oil Description:*

8.3.1.1 The test oil sample shall be uncontaminated and representative of the lubricant formulation being evaluated.

8.3.1.2 A minimum of 7.5 L of new oil is required to complete the test. A 20 L sample of new oil is normally provided to allow for inadvertent losses.

8.3.2 *System Description:*

8.3.2.1 Configure the oil system as shown in Fig. A7.8 to minimize stand-to-stand variations that could influence test severity. Measure engine oil pressure at the points shown in Fig. 5. The oil flow rate and external pressure drop are controlled by specifying the volume, plumbing configuration, and orientation of the heat exchanger. The oil flow out of the vertically mounted heat exchanger shall be level with the oil in

[23] The sole source of supply of the fuel known to the committee at this time is Haltermann-Solutions. If you are aware of alternative suppliers, please provide the information to ASTM International Headquarters. Your comments will receive careful consideration at a meeting of the responsible committee,[1] which you may attend. Annex A16 provides testing and other requirements for being considered as an alternate by the Sequence V Surveillance Panel.

TABLE 3 VH Fuel Analysis

NOTE 1—Appearance, water, lead, and oxidation stability are analyzed on an absolute basis.

Parameter	Specification Band
API gravity[A]	58.7 to 61.2
RVP[B]	60.7 kPa to 63.4 kPa
Total sulfur[C]	less than 100 mg/kg
Existent gum[D]	5 mg/100 mL, max
Distillation[E]	
IBP	22.2 °C to 35.0 °C
10 %	48.9 °C to 57.2 °C
50 %	98.9 °C to 115.2 °C
90 %	162.8 °C to 176.7 °C
EP	196.1 °C to 212.8 °C
Appearance	clear and bright
Water[F]	0.01 % by volume, max
Lead[G]	10 mg/L, max
Oxidation stability[H]	1440 min, min

[A] In accordance with Test Method D1298, D287 or D4052.
[B] In accordance with Test Method D323 or Automatic Reid Vapor Pressure.
[C] In accordance with Test Method D4294, D1266, or D2622.
[D] In accordance with Test Method D381.
[E] In accordance with Test Method D86.
[F] In accordance with Test Method D6304.
[G] In accordance with Test Method D3237 or D5059.
[H] In accordance with Test Method D525.

AVA Documents
Document Sharing Hub

Full document details: ASTM D8256-24

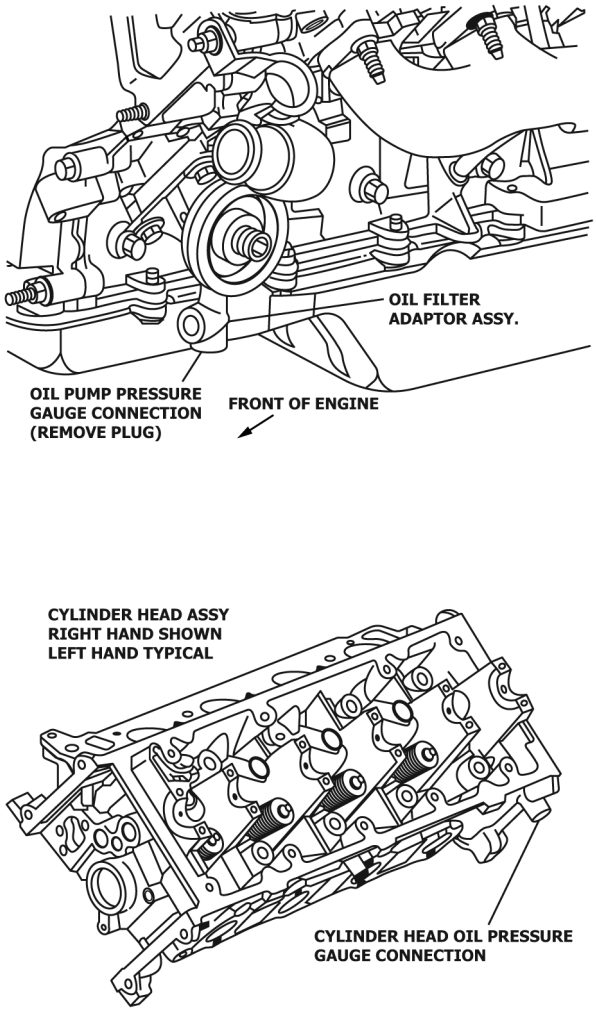

FIG. 5 Oil Pressure Gauge Connections

thermocouple. The lengths of the lines are not specified although the line diameters are indicated in Fig. A7.8. The line length and diameter have a large influence on the volume of the external system. The internal volume of the entire external system shall be 540 mL ± 30 mL.

8.3.2.2 Use oil filter adapter OHT6A-007-1 (X2.1.11), oil filter housing OHT6A-012-4 (X2.1.11). Use oil filter screen OHT6A13-3 (X2.1.11). Be sure all hoses and fittings on the oil heat exchanger are properly connected and secure. *The external oil system components shall not be brass, copper or galvanized, as these metals may influence used oil analysis.*

8.3.3 *Heat Exchanger*—The heat exchanger has been chosen to minimize the volume of the external system. The heat exchanger has adequate but not excessive capacity to control the oil temperature. The system requires a high level of maintenance to provide adequate cooling, especially when process water temperature is high. An effective, well-maintained process water control system is necessary to achieve the specified oil temperatures. Use a vertically mounted ITT Standard Xchange heat exchanger P/N 5-160-02-008-002 Model SSCF (X2.1.9) or equivalent. Configure the system to allow the process water to flow through the vertical tubes and the oil through the shell. This orientation facilitates cleaning of the tubes.

8.3.4 *System Cleaning:*

8.3.4.1 Clean the external oil cooling system thoroughly before each test. An acceptable technique for cleaning the oil heat exchanger is detailed in Annex A9. Flush and rinse the external lines before each test. The specific technique used (removed from or flushed on the stand, and so forth) is left to the discretion of the laboratory.

8.3.4.2 Regardless of the flushing technique employed, use an organic solvent (see 7.7.2) for the final flushing followed by separate rinses with hot water (>60 °C) and degreasing solvent (7.7.1) before air-drying the components. Incomplete cleaning of the external oil system may allow debris to dislodge and circulate throughout the engine during subsequent tests. Incomplete cleaning may also cause oil temperature control problems and contaminate subsequent test oils.

AVA Documents
Document Sharing Hub

Full document details: ASTM D8256-24

8.3.5 *Control Specifications*—The operating conditions are specified in Table 2. Additional information concerning the oil pressure, is found in 12.5.7. Cyclic ramping specifications are detailed in Table 4.

8.4 *Coolants:*

8.4.1 *Description*—The engine coolant is equal parts of demineralized (less than 0.34 g/kg) or distilled water and a fully formulated ethylene glycol based automotive antifreeze to protect against corrosion of all system components. The RAC coolant is a solution of demineralized (less than 0.34 g/kg) or distilled water and an additive treatment of 475 mL of Pencool 2000[24,13] per 15 L of water.

8.4.2 *General System Description*—The following guidelines are common to both the engine and RAC coolant systems:

8.4.2.1 A transparent section is required to permit visual inspection of the coolant. Provide air bleeds to allow removal of entrained air. Provide a drain at the low point of the system to allow complete draining of the system.

8.4.2.2 An effective, well-maintained process water control system is necessary to achieve the specified coolant temperatures.

8.4.2.3 The system shall allow precise calibration of the flowmeters, after installation in the test stand. Avoid turbulence near the measurement meters, and the flowmeters used for calibration.

8.4.3 *Engine Coolant System Description:*

[24] The sole source of supply of Pencool 2000 coolant known to the committee at this time is Penray Cos., Inc., 1801 Estes Ave., Elk Grove, IL 60007.

TABLE 4 Test Ramping Requirements[A]

Stage III to I	
Engine speed	1195 r/min to 1250 r/min within 10 s to 25 s
	1200 r/min ± 5 r/min within 200 s
Manifold absolute pressure	68.8 kPa to 75 kPa within 20 s to 80 s
	69 kPa ± 0.2 kPa within 200 s
Oil inlet temperature	67.5 °C within 11 min ± 2 min
Coolant outlet temperature	56.5 °C within 6 min ± 2 min
Rocker arm cover inlet temperature	29 °C within 17 min
Lambda	Return AFR control to PCM at the beginning of the ramp
Stage I to II	
Engine speed	2895 r/min within 30 s to 90 s
Manifold absolute pressure	66 kPa ± 0.2 kPa within 150 s
	62 kPa to 72 kPa from 0 s to 150 s
Oil inlet temperature	99.5 °C within 9 min ± 2 min
Coolant outlet temperature	84.5 °C within 7 min ± 2 min
Rocker arm cover inlet temperature	84.5 °C within 17 min ± 2 min
Stage II to III	
Engine speed	715 r/min within 15 s to 30 s
Engine power	< 3 kW at 5 s to 20 s
Oil inlet temperature	46 °C within 15 min ± 2 min
Coolant outlet temperature	46 °C within 9 min ± 2 min
Rocker arm cover inlet temperature	30 °C within 13 min ± 2 min
Lambda	0.705 to 0.765 within 30 s

[A] *Test Ramping Requirements Information*—At the start of the III to I ramp, return the mass air flow to engine control module relay to its normal position, allowing the mass air flow sensor to provide the normal signal to the engine.

8.4.3.1 Configure the engine cooling system according to the schematic diagram shown in Fig. A7.18. The engine coolant system volume shall be 24 L ± 2 L. This volume includes all equipment, plumbing, and the engine excluding the coolant reservoir and plumbing connecting the coolant reservoir with the main system (see Fig. A7.18). The coolant reservoir volume shall be 9.0 L ± 2 L. The thermostat housing is modified to accept the coolant outlet temperature thermocouple (9.1.3). *Do not install the thermostat.* Block coolant bypass port in intake manifold (7.6.2.1). Install a coolant flow meter per manufacturer's recommendation for position and length of straight tube before and after the meter.

8.4.3.2 A radiator cap is used to limit system pressure to 105 kPa. Pressurize the coolant system to 70 kPa ± 10 kPa at the top of the coolant reservoir (Fig. A7.18).

8.4.3.3 The engine coolant flow rate and outlet temperature are controlled in accordance with the specifications listed in Table 2. Information concerning the cooling flow rate measurement device is detailed in 9.3.2. Cyclic ramping specifications are detailed in Table 4. The coolant flow rate is measured with a flowmeter (X2.1.6) and controlled with an in-line flow control valve. The flow control valve must be on the outlet side of the engine.

8.4.3.4 As a minimum, inspect and clean the engine coolant system components, external to the engine, prior to running each reference calibration test. A specific flushing technique is not specified. However, the technique should employ a commercial descaling cleaner (7.7.3).

8.4.4 *RAC Coolant System Description:*

8.4.4.1 Inspect and clean the complete RAC control system prior to running each reference oil calibration test. A specific flushing technique is not specified. However, the technique should employ a commercial descaling cleaner (7.7.3).

8.4.4.2 Schematic diagrams of the RAC coolant control systems are shown in Fig. 6. Derive heat for the control system from an external source, such as hot water, steam, or an electric immersion heater.

8.4.4.3 Control the RAC coolant flow rate and inlet temperature in accordance with the specifications listed in Table 2. The coolant pressure is not specified, but design the system to minimize the pressure on the RAC and prevent distortion of the jacket. Maintain the system pressure below 70 kPa to prevent distortion of the RAC jacket.

8.5 Cyclic ramping specifications are detailed in Table 4.

8.6 *Stage III Closed Loop AFR Control:*

8.6.1 Modify the mass airflow sensor to engine control module wiring in accordance with Fig. A7.41 to supply a simulated mass air flow sensor signal to provide closed loop AFR control during Stage III.

8.6.2 Use the average of lambda from both the left and right cylinder bank AFR sensors to provide the feedback for the mass air flow sensor to directly control the lambda values during Stage III.

9. Measurement Instrumentation

9.1 *Temperatures:*

9.1.1 *Equipment:*

AVA Documents
Document Sharing Hub

Full document details: ASTM D8256-24

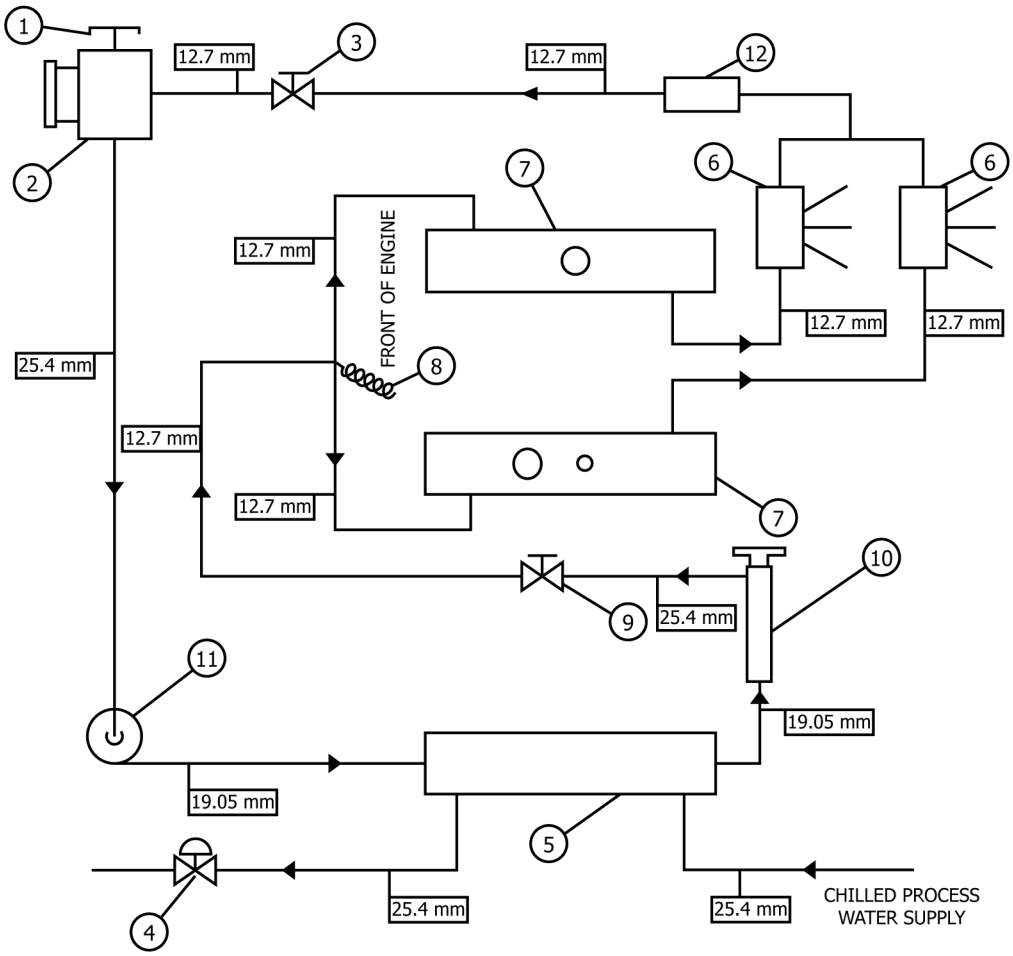

NOTE 1—Legend:
(1) Vented reservoir cap
(2) Coolant reservoir (fabricated)
(3) Pressure control valve (optional)
(4) Chilled process water control valve
(5) Stage I and III heat exchanger
(6) Flowmeter
(7) Rocker arm covers
(8) Inlet temperature sensor
(9) Flow control valve
(10) External heat source
(11) Electric coolant pump DAYTON ¾ HP 6K581A, 2ZWR7 or equivalent
(12) Sight glass

FIG. 6 Typical Rocker Arm Cover Heating and Cooling System

9.1.1.1 Temperature measurement locations for the six required temperatures are specified. There are no temperature inputs to the EEC.

9.1.1.2 All thermocouples, except the intake-air thermocouple, shall be premium and sheathed. The intake-air thermocouple may be an open-tip type. The diameter and length of the thermocouples shall be 3 mm by 100 mm.

9.1.2 *Engine Coolant Inlet*—Install the sensor in the outlet perpendicular to the run of the tee fitting upstream from the water pump inlet 300 mm to 400 mm from the face of the block. Install sensor with the tip in the center of the stream of flow, directly opposite of the perpendicular outlet. (See Fig. A7.18.)

9.1.3 *Engine Coolant Outlet*—Install the temperature sensor in the modified thermostat housing. Locate the tip of the temperature sensor in the center of the stream of flow and is located in the thermostat housing.

9.1.4 *Engine Oil Inlet*—Install the tip of the sensor at the center of the flow stream through the external oil filter adapter (see Fig. A7.8). Tip of sensor shall be even with the machined surface of the oil filter adapter.

9.1.5 *Engine Oil Outlet*—Install the tip of the sensor at the center of the cross fitting attached to the bottom of the heat exchanger (see Fig. A7.8). Locate the sensor along the same axis, but opposite, the outlet port connected to the heat

AVA Documents
Document Sharing Hub

Full document details: ASTM D8256-24

exchanger. The tip shall be within 2 mm of the center distance between the external most surfaces of the outlets along the axes.

9.1.6 *Intake Air*—Install the tip of the thermocouple mid-stream in the air cleaner (see Fig. A7.1). Insertion depth shall be 55 mm ± 2 mm.

9.1.7 *RAC Coolant Inlet*—Install the tip of the thermocouple at the center of the cross fitting before the inlets of the RAC's (see Fig. 6, item 8). Locate the sensor along the same axis, but opposite the inlet port of the incoming fluid. The tip shall be within 2 mm of the center distance between the external most surfaces of the outlets along the axes.

9.1.8 *Calibration*—Calibrate all thermocouples prior to a reference oil test. All measurement devices used for sensing temperature shall meet the minimum requirements as outlined in the DACA II reports and also conform to total system response requirements as outlined by the TMC.

9.2 *Pressures:*

9.2.1 *Equipment*—Pressure measurement for each of the eight required parameters is detailed in the following sections. This allows reasonable opportunity for adaptation of existing test stand instrumentation. Replace pressure sensors that are part of the EEC system with only Ford specified equipment.

NOTE 5—Tubing between the pressure tap locations and the final pressure sensors should incorporate condensate traps, as indicated by good engineering practice. This is particularly important in applications where low air pressures are transmitted by means of lines which pass through low-lying trenches between the test stand and the instrument console.

9.2.2 *Intake Manifold Absolute*—Block off the EGR port on the back of the throttle body plenum (block off plate shown in Fig. A7.13) drill and tap the block off plate and install fitting for MAP port.

9.2.3 *Engine Oil*—Measure oil pump pressure at the bottom port of the oil filter adapter housing on the engine block (see Fig. 5 and Fig. A7.24) Take cylinder head oil pressure measurements on the sides of the cylinder heads on the rear of the left cylinder head and front of the right cylinder head (see Fig. 5 and Fig. A7.23). Use individually dedicated pressure sensors.

9.2.4 *Engine Coolant Pressure*—Measure engine coolant pressure at the top of the coolant reservoir as shown in Fig. A7.18.

9.2.5 *RAC Coolant*—RAC coolant pressure can be measured at the coolant inlet cross fitting as is done with temperature although monitoring of RAC pressure is not required. Pressure should remain adequate as long as temperature and flow are within the limits of Table 2.

9.2.6 *Fuel*—Measure the fuel pressure near the injector rail inlet as shown in Fig. 1. When utilizing a pressure gauge mounted directly to the injector rail, the gauge should be a damped, liquid-filled type. Too much mass attached to the fuel rail may cause it to leak. Any instrumentation attached to the fuel rail should be supported by something other than the fuel rail.

9.2.7 *Intake Air*—Measure the intake-air pressure in the air cleaner housing in the location shown in Fig. A7.1. Insertion depth of the probe shall be 50 mm ± 2 mm.

9.2.8 *Crankcase*—Measure the crankcase pressure at the dipstick tube. The sensor shall be capable of measuring positive and negative pressure.

9.2.9 *Exhaust Back Pressure*—Measure the exhaust back pressure with the exhaust gas sampling probe located downstream in the Y (see Fig. A7.16). A sensor capable of absolute or gauge measurement corrected with barometric pressure reading is recommended. Install a condensate trap between the probe and sensor to accumulate water present in the exhaust gas.

9.2.10 *Calibration*—Calibrate all pressure measurement sensors prior to a reference oil test. The MAP pressure measurement system shall indicate within 0.1 kPa of the laboratory calibration standard. All measurement devices used for sensing pressure shall meet the minimum requirements as outlined in the DACA II reports and also conform to total system response requirements as outlined by the TMC.

9.3 *Flow Rates:*

9.3.1 *Equipment*—Flow rate measurement for each of the four required parameters is detailed in the following subsections. With the exception of the engine coolant and blowby flow rates, measurement equipment is not specified for a given parameter. This allows reasonable opportunity for adaptation of existing test stand instrumentation.

9.3.2 *Engine Coolant*—Determine the engine coolant flow rate by measuring with a flowmeter with an accuracy of <0.5 % (see Fig. A7.18). An example of a flowmeter meeting this accuracy is listed in X2.1.6. Take precautions to prevent air pockets from forming in the lines to the pressure sensor. Transparent lines or bleed lines, or both, are beneficial in this application. Ensure that the manufacturer's required straight sections of pipe are installed immediately up and down stream of the flowmeter.

9.3.3 *RAC Coolant*—Measure the total volumetric coolant flow rate through the RAC system and the individual RAC flowrates as shown in Fig. 6.

9.3.3.1 *Calibration*—Calibrate the flowmeters used in the measurement of both the engine coolant flow rate and RAC coolant flow prior to a reference oil test. Calibrate the flowmeters as installed in the system at the test stand with test fluid. Calibrate the flowmeters with a flowmeter or by a volume/time method at the three operating conditions. See Table 2. All measurement devices used for sensing flow shall meet the minimum requirements as outlined in the DACA II reports and also conform to total system response requirements as outlined by the TMC.

9.3.4 *Blowby:*

9.3.4.1 Measure the blowby flow rate using the apparatus shown in Fig. 7. The measurement system routes the blowby through an external, sharp-edged orifice and into the engine intake manifold by means of an auxiliary (dummy) PCV valve. Maintain crankcase pressure during operation of the system at 0.0 Pa ± 25 Pa to minimize the potential for crankcase leakage. Mount the dummy PCV valve and orifice plate in a vertical position.

9.3.4.2 Determine the blowby flow rate by measuring the differential pressure drop across the sharp-edged orifice; an inclined manometer or differential pressure sensor is required

AVA Documents
Document Sharing Hub

Full document details: ASTM D8256-24

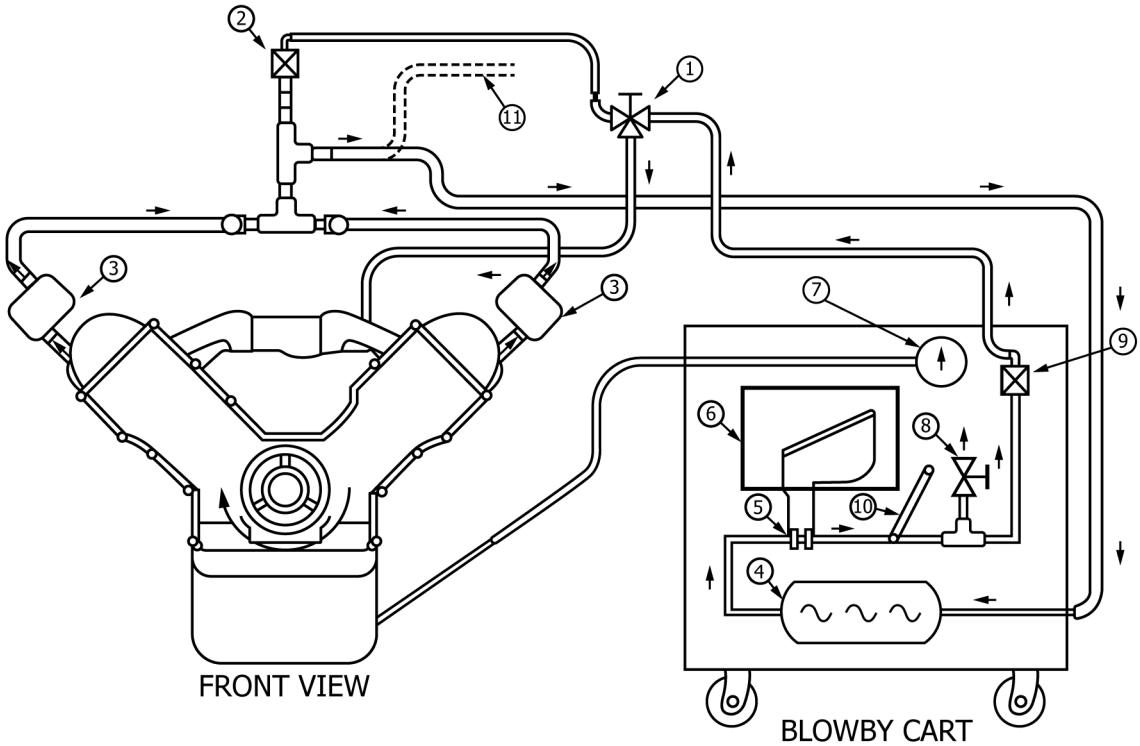

NOTE 1—Legend:
(1) 12.7 mm full flow stainless steel ball valve
(2) PCV valve
(3) Oil separator (F47E- 6A785-AA)
(4) Surge chamber
(5) Orifice meter
(6) Pressure transducer
(7) Crankcase pressure gauge
(8) Bleed valve
(9) Dummy PCV valve
(10) Thermometer or temperature sensor
(11) Excess blowby vent pipe (during normal operation)

FIG. 7 Blowby Measurement Apparatus

for measurement of the differential pressure drop. The differential pressure drop sensor shall have a range from 0 kPa to 1 kPa.

9.3.4.3 Fabricate the sharp-edged orifice assembly that is specifically designed for blowby flow rate measurement in strict compliance with the specifications that are available from the TMC. Additional information on the orifice system can be obtained from the source listed in X2.1.8. The assembly contains five orifices. The 9.525 mm orifice is generally satisfactory for the range of blowby flow rate encountered. The complete orifice assembly can also be purchased from the supplier listed in X2.1.11.

9.3.4.4 As a minimum, clean the blowby measurement apparatus weekly. Replace the O-rings with each cleaning. Exercise particular care when cleaning the orifice meter assembly. Clean the three-way valve by soaking the valve in agitated organic solvent (see 7.7.2) until clean, followed by hot (> 60 °C) water rinse and spray rinse with degreasing solvent (7.7.1). Use compressed air to force-dry. Inspect the port passages and remove any carbonaceous deposits by scraping. If the valve is disassembled for cleaning, make sure the core is properly seated upon reassembly.

9.3.4.5 Calibrate the blowby orifice meters used for laboratory measurements standards every six months. Calibrate laboratory blowby measurements standards, not used for production, yearly. The calibration standard shall be traceable to the NIST. Calibrate the temperature measuring devises in the blowby system every six months. Internal leakage within the three-way valve may cause some of the blowby gas to pass directly to the intake manifold from the test PCV valve and result in erroneous blowby flow rate measurements (see Fig. 7).

9.4 *Fuel Consumption*—Determine the fuel consumption rate by measuring the amount of make-up fuel flowing from the external fuel tank. The measurement point is upstream of the return flow from the fuel rail (see Fig. 1).

9.4.1 Calibrate mass flowmeter or gravimetric systems prior to each reference oil test. Volumetric systems shall be temperature and specific gravity compensated and calibrated against a

AVA Documents
Document Sharing Hub

Full document details: ASTM D8256-24

mass flow device. The flowmeter located on the test stand shall be within 1 % of the calibration standard.

9.5 *Speed and Torque:*

9.5.1 The dynamometer speed and torque control systems shall be capable of maintaining the limits specified in Table 2 and meet the ramping requirements specified in Table 4. These limits require control within ±0.9 % for operation during Stages I and II. Because the dynamometer and driveline frictional losses might approach the power produced by the engine during Stage III, manage the control input and system response during Stage III carefully to maintain engine operation within the specified tolerances. These tolerances are necessary to maintain a stable air-fuel ratio during Stage III. Hydraulic dynamometers have slow control response at low speeds and are not suitable for operation during Stage III.

9.5.2 Utilize a full closed-loop system using a dry gap dynamometer. A typical closed-loop system maintains engine speed by varying the electrical current to the dynamometer and maintains engine power by varying the engine throttle position. The total driveline inertia through to the dynamometer, excluding the engine flywheel, shall be 0.8 $kg \cdot m^2$ ± 0.1 $kg \cdot m^2$.

9.5.3 Calibrate the load cell transducer and readout system with deadweights at least once per test. Calibration of the zero scale readout is recommended once per day during the oil level soak period. Calibrate the speed measurement system prior to a reference oil test.

9.6 *Exhaust Gas:*

9.6.1 *Equipment:*

9.6.1.1 Determine the air-fuel ratio using a wide band O_2 sensor to measure Lambda. The device shall have a minimum accuracy of ± 0.021 of lambda. The required device is shown in A12.7.

9.6.1.2 Mexa-730 sensors may be purchased with a factory calibration. Coefficients from the calibration sheet may be entered into the Mexa-730 module before use. Laboratories may use the sensors with the factory calibration until they drift outside of the test specifications. Calibration checks may be performed at the discretion of the laboratory.

9.6.1.3 If a laboratory desires to recalibrate the Mexa-730 units, they must use one of the three-point calibration methods using standard gases listed in the manufacturer's installation and operation instructions.

9.7 *Humidity:*

9.7.1 The intake air humidity is recorded using the laboratory's primary humidity measurement system. Make corrections to each reading, for non-standard barometric conditions, using an additive correction derived from the perfect gas law.

9.7.2 The primary laboratory measurement system is calibrated at each stand on a semi-annual basis using a hygrometer with a minimum dew point accuracy of ± 0.55 °C at 16 °C. The calibration consists of a series of 20 paired measurements between the primary laboratory system and the calibration hygrometer (see Table 5 for an example). The measurement interval shall be appropriate for the time constant of the humidity measuring instruments and the control system. Comparison periods of 20 min to 2 h, with measurements recorded at intervals of 1 min to 6 min intervals, are typically acceptable.

TABLE 5 Humidity Calibration Example

NOTE 1—Test Type-VH; Test Stand – 29; Date – 11/12/15; Barometric pressure – 29.1 in. Hg; Humidity correction – to 0.28 g/kg.

NOTE 2—Humidity readings are corrected for non-standard barometric pressure.

NOTE 3—X = Mean difference, g/kg – 0.2.S = Standard deviation, g/kg – 0.11.

NOTE 4—X = Mean difference, g/kg – 0.2.S = Standard deviation, g/kg – 0.11.

NOTE 5—If standard deviation > 0.71 g/kg, calibration is invalid.

	Zi	Yi	Yi-Zi
	System	Calibration	
Reading	Humidity	Humidity	Difference
1	11.3	11.4	0.1
2	11.2	11.5	0.3
3	11.2	11.5	0.3
4	11.2	11.6	0.4
5	11.3	11.6	0.3
6	11.3	11.6	0.3
7	11.3	11.6	0.3
8	11.3	11.6	0.3
9	11.4	11.6	0.2
10	11.4	11.7	0.3
11	11.5	11.7	0.2
12	11.5	11.7	0.2
13	11.4	11.6	0.2
14	11.4	11.6	0.2
15	11.5	11.6	0.1
16	11.6	11.6	0.0
17	11.6	11.7	0.1
18	11.6	11.7	0.1
19	11.6	11.7	0.1
20	11.5	11.7	0.2

The measurements taken with the calibration hygrometer are corrected to standard barometric pressure (101.1 kPa) using the perfect gas law. The sample line shall be non-hygroscopic. Exercise precaution to prevent condensation of the sample.

9.7.3 The difference between each pair is computed and used to form a mean and standard deviation. The absolute value of the mean difference cannot exceed 1.4 g/kg, and the standard deviation cannot exceed 0.71 g/kg. Both of these requirements shall be met to consider the primary humidity measurement system to be calibrated. If either of these requirements cannot be met, the laboratory shall investigate the cause, make repairs, and recalibrate. The calibration data is maintained for two years.

9.7.4 The calibration sample tap is located on the air line to the engine, between the main duct and entrance to the air filter housing.

10. Miscellaneous Laboratory Equipment

10.1 *ODB II Diagnostic Device*—A STAR (self-test automatic readout), IDS or equivalent tester will be necessary to diagnose the EEC system in case of a malfunction or operational abnormality.

10.2 *Beaker*—A beaker with a capacity of 5000 mL is suitable for the initial oil fill. A beaker with a capacity of 500 mL is suitable for oil additions.

Documents
Document Sharing Hub

Full document details: ASTM D8256-24

11. Test Stand Calibration

11.1 *Verification:*

11.1.1 Verify the calibration of test stands. (See A2.2.1 for general details.) Stand calibration tests are normally conducted upon expiration of either the 180 day calibration time period or after completing 15 non-reference oil tests. However, calibration time periods may be adjusted by the TMC. Additionally, any test terminated with 50 test hours or less will not be counted towards the 15 allowed runs. Any non-reference oil test started within 180 days of the previous calibration test is considered within the calibration period, provided the 15 allowed non-reference oil tests that have been completed since the previous calibration test in the stand are not exceeded. (Follow instructions in A2.6 and A2.6.1 for reporting the calibration test results.)

11.1.2 A reference oil sample of 22.4 L is provided by the TMC (see A2.5 for additional information) for each stand calibration test.

11.2 *Unacceptable Calibration Results:*

11.2.1 It is recognized that a certain percentage of calibration tests fall outside the acceptance limits because of the application of statistics in the development of the acceptance limits. Failure of a reference oil test to meet calibration limits can be indicative of a false alarm or a stand, laboratory, or industry problem. When this occurs, the laboratory, in conjunction with the TMC shall attempt to determine the problem source. The TMC may solicit input from industry expertise (other testing laboratories, the test sponsor, ASTM Technical Guidance Committee, Sequence V Surveillance Panel, Sequence V Operation and Hardware Subpanel, and so on) to help determine the cause and extent of a problem. The Sequence V Surveillance Panel adjudicates industry problems.

11.2.2 If the TMC determines the problem is a false alarm and is stand-related, there is no impact on other non-reference tests running in other stands within the laboratory. If the TMC determines the problem is laboratory-related, non-reference tests run during the problem period shall be considered invalid, unless there is specific evidence to the contrary for each individual test.

11.2.3 The TMC reschedules a calibration test once it is satisfied that no particular problem exists or the problem has been resolved. The laboratory shall provide adequate documentation to support conclusions reached during this process. Attach this documentation to the acceptable calibration test report. It shall provide sufficient information to show how the problem related to other tests operated during the same period.

11.3 *Test Stand Modifications*—Report modification of test stand control systems or completion of any nonstandard test on a calibrated stand to the TMC immediately. A nonstandard test includes any test completed under a modified procedure requiring hardware or controller modifications to the test stand. The TMC determines whether another calibration test is necessary after the modifications have been completed.

11.3.1 See A2.2 for related information about non-standard tests.

11.4 *Reference Oil Accountability:*

11.4.1 Laboratories conducting calibration tests are required to provide a full accounting of the identification and quantities of all reference oils used. (See A2.3 for related information.)

11.4.2 With the exception of new oil analysis required in 13.6, perform no physical or chemical analysis of new reference oils without the permission of the TMC. (See A2.4 for additional information.) Retain engine parts from reference oil tests for six months.

11.5 *Test Numbering System:*

11.5.1 *Acceptable Tests*—The test number shall follow the format AAA-BB-CCC. AAA represents the test stand number. BB represents the number of tests since last reference. CCC represents the total number of tests on the stand. As an example, 6-10-175 represents the 175 test on Stand 6 and the tenth test since the last reference. Consecutively number all tests on a given stand.

11.5.2 *Unacceptable or Aborted Tests*—If a calibration test is aborted or the results are outside the acceptance limits, the CCC portion of the test number for subsequent calibration test(s) shall include a letter suffix. Begin the suffix with the letter A and continue alphabetically until a calibration test is completed within the acceptance limits. For example, if three consecutive unacceptable calibration test are completed on the same test stand, and the test stand number of the first test is 6-0-175, the next two test numbers would be 6-0-175A and 6-0-175B. If the results of the next calibration test are acceptable, the test number 6-0-175C would permanently identify the test and appear on future correspondence. The completion of any amount of operational time on tests other than calibration tests will cause the test number to increase by one. Add no letter suffix to the test number of tests other than calibration tests.

12. Test Procedure

12.1 *Pre-test Procedure:*

12.1.1 *Engine Break-In Procedure*—Run break-in schedule listed in Table 6. Conduct the break-in before each test using the test oil.

12.1.1.1 Charge the engine with 3000 g (as indicated by a calibrated scale with an accuracy of at least ±0.5 g) of test oil before the break-in run. Run the engine at 1500 r/min ± 25 r/min and 37.6 kPa MAP until the oil temperature reaches 80 °C ± 2 °C or for at least 2 min. Record the dipstick level 20 min ± 2 min after shutdown. This shall be the Test Full mark for this test. Use the table in Annex A11 to determine the oil level.

12.1.1.2 The laboratory ambient atmosphere shall be reasonably free of contaminants. The temperature and humidity levels of the operating area are not specified. Divert air from fans or ventilation systems away from the test engine.

12.1.1.3 The break-in allows an opportunity to check EEC system operation, blowby levels, Lambda for Stage II and III, check for leaks in the various systems and purge air from the cooling systems. Specifications concerning the break-in procedure are shown in Table 6. The engine start-up and shutdown procedures are detailed in 12.2.1 and 12.2.2 respectively.

12.1.1.4 During Step 1, bleed the air from the engine and RAC coolant systems and check all fluid systems for leaks

AVA Documents
Document Sharing Hub

Full document details: ASTM D8256-24

TABLE 6 Sequence VH Break-in Schedule

NOTE 1—Speed, power, and MAP ramps: Oil leveling—20 s ramp from idle, Step 1 to 2—60 s ramp, Step 2 to 3—15 s ramp.

NOTE 2—Temperature setpoints are not ramped, and should be changed at the beginning of each ramp step.

Condition	Oil Leveling	Step		
		1	2	3
Duration, min	2 min	5	40	45
Total time, h:min		0:05	0:45	1:30
Engine speed, r/min	1500 ± 25	700 ± 15	2900 ± 5	700 ± 15
Engine power, kW		1.30 ± 0.2	record	1.30 ± 0.2
Manifold abs press, kPa (abs)	37.6		66 ± 0.5	record
Engine oil in, °C	80 ± 2		100 ± 0.5	45 ± 1
Engine coolant out, °C	90 ± 2		85 ± 0.5	45 ± 1
Engine coolant flow, L/min	48 + 2	28 + 2	118 ± 2	28 ± 2
RAC coolant in, °C			85 ± 0.5	29 ± 1
Lambda			1.0	0.75
Exhaust back pressure, kPa (abs)	Open valve	Open valve	107 ± 2	Open valve

12.1.1.5 During Step 2, check blowby level for the Stage II conditions. A high or low blowby flow rate at this time could be indicative of the blowby flow rate during the test. A ring gap adjustment can be performed at this time or after the break-in, but within the first 48 h of the test, to achieve an adequate blowby flow rate. Testing has shown that a blowby range of 65 L/min to 75 L/min during the break-in typically produces acceptable blowby during the test. However, the need for a ring gap adjustment is at the laboratory's discretion, noting that a ring gap adjustment cannot be made at any other time during the test.

12.1.1.6 During Step 3 (see Table 6) check the operation of the idle load control system and EEC system operation. Allow the oil and coolant temperatures to reach 45 °C ± 0.5 °C. Lambda values shall match the values listed in Table 6. If not, check the idle load circuit and the EEC system operation with a STAR tester.

12.1.1.7 Record all normal parameters in Steps 2 and 3 after operation at each step for 35 min. Prolonged operation at a rich air-fuel ratio can cause excessive fuel dilution and alter test severity.

NOTE 6—The engine normally requires approximately 20 min to reach steady-state conditions after a step change.

12.1.1.8 Check and record oil level after break-in. If piston rings are re-gapped or replaced during or after the break-in, ensure that the oil level is brought back to the last known oil level by adding new oil or removing oil. Refer to section 12.1.1.1 for oil leveling procedure.

12.2 *Engine Operating Procedure:*

12.2.1 *Engine Start-up*—Use the following detailed procedure each time the engine is started.

12.2.1.1 Turn on the ignition, safety circuits, fuel management system, fuel pump, and the rocker arm cover coolant pump.

12.2.1.2 Connect the intake-air supply duct.

12.2.1.3 *Crank The Engine*—The engine should start within 4 s. Since the engine has a crankshaft driven oil pump, cranking oil pressure might be low. If used, disable a low oil pressure ignition shutoff during engine starting to allow the engine to start even though the oil pressure is low. The inclusion of this type switch could lead to excessive cranking time to start the engine.

12.2.1.4 If starting difficulties are encountered, the laboratory should not continue to crank the engine excessively. Perform diagnostics to determine the reason the engine will not start (ignition problems, insufficient or excess fuel, and so forth). Excessive cranking times can promote additional fuel dilution of the test oil and can adversely affect the test. In addition to other precautions, do not attempt to pour gasoline into the intake-air horn.

12.2.2 *Engine Shutdown:*

12.2.2.1 *Scheduled Shutdown Procedure*—Follow the procedure detailed as follows, each time a scheduled shutdown is performed. Scheduled shutdowns include shutdowns that occur during engine break-in and oil leveling:

(1) Bring the engine speed to 700 r/min ± 50 r/min and coolant flow to 28 L/min ± 2 L/min for 10 min.

(2) Switch the ignition off. (Turn off power to the EEC and ignition.)

(3) Turn off fuel and RAC coolant pumps.

(4) Reduce the intake-air pressure to atmospheric.

12.2.2.2 *Unscheduled Engine Shutdown*—Follow the procedure detailed as follows, each time an unscheduled engine shutdown is performed:

(1) Stop test timer when ramp down starts.

(2) Ramp to Stage 3:

(a) From Stage 1—15 s speed and load setpoint ramp; 6 min setpoint ramp of other controlled parameters.

(b) From Stage 2—Perform Stage 2 to 3 ramp (Table 4).

NOTE 7—Total cooldown time is 6 min after the initiation of the ramp to Stage 3 conditions.

(3) Switch the ignition and RAC coolant pump off (turn off power to the EEC and ignition).

(4) Turn off fuel pump.

(5) Reduce the intake-air pressure to atmospheric.

12.2.2.3 *Start-Up After Unscheduled Shutdown*—Follow the procedure detailed as follows, each time an engine start-up is performed after an unscheduled shutdown.

(1) Start—5 min in Stage 3, then to:

(a) Return to Stage 1—Stage 3 to 1 ramp, 30 s.

AVA Documents
Document Sharing Hub

Full document details: ASTM D8256-24

(b) Return to Stage 2—60 s speed and load setpoint ramp; 10 min setpoint ramp of other controlled parameters.

NOTE 8—Test time resumes after all controlled parameters are within specification.

12.2.2.4 *Start-Up After Oil Leveling Period*—Follow the procedure detailed as follows, each time an engine start-up is performed after an oil leveling period.

(1) Start—5 min in Stage 3; then Stage 3 to 1 ramp (Table 4).

12.2.3 *Cyclic Schedule, General Description:*

12.2.3.1 The test is composed of three stages as shown in Table 2. Together, the three stages comprise one cycle. Each cycle lasts 4 h and is repeated 54 times for a total of 216 h. Six consecutive cycles are completed each 24 h period. Every sixth cycle is modified to provide time for oil sampling and leveling. This modification is described in 12.3.1.

12.2.3.2 Ramping requirements specifying parameter change rates are shown in Table 4. The rate of speed, temperature, fueling and load changes, as well as the amount of enrichment between stages, can influence sludge severity and engine component wear. Therefore, ramping rates are very important.

12.2.4 *Unscheduled Downtime*—The oil leveling periods of 30 min are the only scheduled shutdowns allowed during the test and are counted as test time. However, the test can be interrupted to perform necessary maintenance (see 12.3.5). Note all unscheduled downtime on the Supplemental Operational Data Form of the final test report.

12.2.5 *Resumption of Test Time After Unscheduled Shutdown*—After an unscheduled shutdown, test time does not begin until the engine has reached operating conditions for the stage at which the shutdown occurred.

12.3 *Periodic Measurements and Functions:*

12.3.1 *Blowby Flow Rate Measurement*—Every sixth cycle, measure and record the blowby flow rate at 30 min ± 5 min into Stage II. The engine shall be stable and operating at normal Stage II operating conditions. Measure blowby when the gas temperature is at least 32 °C. The installation of the blowby flow rate measurement apparatus is shown in Fig. 7. The procedure for measuring blowby flow rate is detailed in 12.3.1.1. Complete only one set (Stage II) of blowby flow rate measurement during each six cycles. Under special circumstances additional blowby flow rate measurements can be performed to determine or verify a problem with the flow rate measurement apparatus or the engine. Record additional blowby flow rate measurements and an explanation of the reason for the additional measurements. Include these data in the supplemental operational data in the final test report.

12.3.1.1 *Measurement Procedure:*

(1) Connect the apparatus pressure sensor to the dipstick tube.

(2) Open the bleeder valve completely.

(3) Connect the bleeder line to the three-way valve.

(4) Position the three-way valve to divert intake manifold vacuum from the engine PCV valve to the dummy PCV valve in the blowby measurement apparatus.

(5) Connect the hose from the blowby meter surge chamber to the 15.9 mm inside-diameter air vent hose on the air cleaner.

(6) Adjust the bleeder valve to maintain crankcase pressure at 0 Pa ± 25 Pa.

(7) Record the differential pressure, blowby gas temperature, and the barometric pressure.

(8) Disconnect the apparatus pressure sensor and reconnect the engine crankcase pressure sensor to the dipstick tube.

(9) Disconnect the surge chamber hose from the air vent hose.

(10) Position the three-way valve to divert intake manifold vacuum to the engine PCV valve and disconnect the bleeder line from the three-way valve.

(11) Connect the air vent hose to the intake-air cleaner.

(12) Calculate the blowby flow rate and correct the value to 38 °C and 100 kPa using the calibration data for the orifice.

$$\text{corrected blowby flowrate} = \text{blowby flowrate} \times \left(3.100\ \left(P / 273.15 + T\right)\right)^{0.5} \quad (1)$$

where:

P = baro-pressure, kPa, and
T = gas temperature, °C.

12.3.2 *Ignition Timing Measurement*—Ignition timing is set by the EEC and may be checked with an OBD II diagnostic tool or oscilloscope. Ignition timing need only be checked if improper EEC and ignition operation is suspected.

12.3.3 *Exhaust Gas Analysis:*

12.3.3.1 Exhaust gas lambda readings are taken continuously throughout the test. The data are used to confirm that the EEC system is operating the engine at the correct air/fuel ratio. Use devices listed in A12.7.

12.3.4 *Oil Additions and Used Oil Sampling:*

12.3.4.1 *Oil Leveling and Sampling Procedure*—Make-up oil additions for leveling and oil sampling occur at intervals of 24 h. Annex A13 shows the cycle when this is to occur. Used oil additions are permitted only during engine reassembly for maintenance (see 12.4.2.2). Add new oil to the engine only when the level is below the original test full level by more than 400 g. Add only enough new oil to reach the low mark of 400 g. No other new oil additions are permitted during the test, except after piston ring gap adjustment (see 12.1.1.8). In the event that the oil level is above the test full mark, do not remove oil until the level is above the test full mark by more than 200 g. If more than 200 g above the test full mark drain off a sufficient amount of oil so that the level is at the 200 g above test full mark. Record the amount drained on the oil leveling sheet. The procedure is shown on the Oil Sampling, Addition and Leveling Worksheet in Annex A13. This form serves as the oil sampling and oil addition data sheet.

(1) Remove a 150 mL purge sample within first 10 min of Stage III.

(2) Remove a 60 mL (52 g) analysis sample within first 10 min of Stage III.

(3) Return the purge sample to the engine.

(4) Shut-down the engine 10 min after the start of Stage III. Turn off fuel pump. Do not shut off the RAC coolant pump.

(5) Record the dipstick level in millimetres 20 min ± 2 min after the engine is shutdown.

(6) Compute the oil level in grams. The difference between the oil level and the Test Full mark is oil consumed in grams.

AVA Documents
Document Sharing Hub

Full document details: ASTM D8256-24

Use the chart in Annex A11 to determine the level. Do not add oil at 216 h. This allows the final drain to be used as a backup to the sample taken at 216 h.

(7) If the level is more than 400 g below the Test Full mark, record the amount of new oil added to bring the level to the mark, –400 g. However, never add more than 400 g during an oil addition.

(8) If the level is more than 200 g above the Test Full mark, record the amount of oil drained to bring the level to the mark, +200 g.

(9) Restart the engine 30 min ± 1 min after shutdown (Step 4). Allow the engine to run at Stage III conditions for 5 min ± 1 min, then resume normal operation.

12.3.5 *General Maintenance*—The scheduled shutdown periods of 30 min during oil leveling allow limited opportunity for engine and stand maintenance. In addition, the test can be shut down at any convenient time to perform unscheduled maintenance. However, minimize the duration of a shutdown. Report any unscheduled shutdown on the Supplemental Operational Data Sheet.

12.4 *Special Maintenance Procedures*—Functions that require special maintenance procedures are listed in this section. These maintenance procedures are specifically detailed because of the effect on test validity or because they require special care while being completed.

12.4.1 *Blowby Flow Rate Adjustment*—A blowby adjustment can only be made during the break-in or within the first 48 h of the test. Blowby might drop from the break-in level but the corrected average Stage II blowby for the test during the first 120 h of the test shall fall within the range from 60 L/min to 70 L/min. Adjust the blowby by changing the ring gaps or replacing piston rings as necessary. Ensure that the ring and piston combination in each cylinder meet the criteria in Table 1. Use the ring cutting procedure outlined in 7.8.5.2.

12.4.1.1 *High Blowby Flow Rate Adjustment*—Reduce high blowby flow rate by replacing the compression rings with new rings that have smaller ring gaps.

12.4.1.2 *Low Blowby Flow Rate Adjustment*—Increase low blowby flow rate by increasing the ring gaps of the compression rings.

12.4.2 *Engine Disassembly and Reassembly for Maintenance (Before End of Test):*

12.4.2.1 Engine assembly and disassembly shall adhere to the procedures in 7.8 and 12.6.2, respectively.

12.4.2.2 When the engine is disassembled for maintenance, drain as much test oil as possible from the oil pan, and retain the oil for installation into the engine after reassembly. Take precautions to ensure the oil is not contaminated and to ensure the deposits are not disturbed on any parts, particularly on any parts that are used to determine the final test results. The Ford 4.6 L engine contains numerous areas that hold oil after the engine is drained. All parts should be placed in or over clean drain pans to collect oil that drains off while maintenance is being performed.

12.4.2.3 During reassembly, used, drained test oil may be used to lubricate the engine parts. Do not use EF-411 oil or new test oil during engine reassembly. After the engine has been reassembled, charge the oil pan with the oil removed from the oil pan and collected from the engine parts during disassembly and maintenance. Record all new oil additions and report them in the Supplemental Operational Data.

12.5 *Diagnostic Data Review*—This section outlines significant characteristics of specific engine operating parameters. The parameters can directly influence the test or can be used to indicate normalcy of other parameters.

12.5.1 *Manifold Absolute Pressure*—Manifold absolute pressure is used in Stages I and II to control engine throttle position.

12.5.2 *Engine Torque*—Engine torque is not controlled in Stages I and II. It should remain relatively constant throughout a test and from test to test. Large differences in torque reading could be indicative of control or engine problems.

12.5.3 *Fuel Consumption Rate*—The fuel consumption rate should remain relatively constant throughout the test. Fuel consumption rate is not a specifically controlled parameter but is used as a diagnostics tool.

12.5.4 *Spark Knock*—Spark knock does not normally occur in the VH test. The octane rating of the fuel, ignition timing, engine speed and torque, and operating temperatures do not promote spark knock. Spark knock indicates abnormal combustion is occurring and can cause extensive engine damage. Take corrective action immediately if spark knock is noted. Errors in the measurement and control of engine torque, ignition timing, operating temperatures, and air/fuel ratio may result in spark knock.

12.5.5 *Exhaust Gas Component Levels:*

12.5.5.1 Use the Lambda levels in the exhaust gas to determine the characteristics of combustion that occur during the test. Use this parameter to determine the normalcy of combustion and any significant changes in combustion that occur throughout a particular test. Lambda in all three stages is controlled by the program in the Powertrain Control Module. No adjustments can be made to change the exhaust gas Lambda. If Lambda differs from what appears in Table 2, check the EEC and test cell control system. Correcting a fault in the EEC and test cell control system is the only way to achieve the correct Lambda value.

12.5.6 *Crankcase Pressure*—Crankcase pressure is a function of blowby flow rate and PCV valve flow. High crankcase pressure is usually caused by high blowby flow rate or a significant loss of PCV valve flow. Incorrect three-way valve plumbing or port plugging also promotes high crankcase pressure. Low or negative crankcase pressure might be caused by low blowby flow rate or a restriction of vent air to the PCV valve.

12.5.7 *Oil Pressure*—The oil pressure is a function of oil viscosity and operating temperature. The oil pressure should remain consistent throughout the test, unless the oil exhibits a significant change in viscosity.

12.5.8 *Oil Temperature Differential*—The oil temperature differential is primarily a function of oil flow rate and oil viscosity and is normally stable throughout the test. The differential can change if the oil viscosity changes significantly during the test.

12.5.9 *Coolant Temperature Differential*—The coolant temperature differential is primarily a function of the coolant flow

AVA Documents
Document Sharing Hub

Full document details: ASTM D8256-24

rate and is normally stable throughout the test. Large variations in the differential can be caused by coolant flow rate or temperature measurement errors.

12.6 *End of Test Procedure:*

12.6.1 *Final Drain*—Drain the engine coolant and RAC coolant immediately after the completion of the last test cycle. Engine oil can be drained with the engine in or out of the engine stand. Allow the engine to stand for 6 h to 12 h in the same attitude in which it was positioned on the test stand prior to drain. This allows the oil to drain completely into the oil pan. Drain the oil from the engine.

12.6.2 *Engine Disassembly*—During disassembly, use extreme care not to disturb engine deposits and to ensure the original location of the parts can be identified with respect to either the cylinder number, valve location, or both.

12.6.3 *Parts Layout for Rating:*

12.6.3.1 Arrange the following parts in the parts rating area in accordance with the layouts detailed in this section. After the parts have been arranged, allow the parts to drain for 4 h to 8 h before rating. Do not attempt to accelerate or force the oil draining. Any fixtures can be used to support the parts as long as they orient the parts in the specified configurations.

12.6.3.2 *Rocker Arm Covers*—Position the RAC's vertically (upper jacket surface perpendicular to the ground) with the front of the RAC at the bottom.

12.6.3.3 *Camshaft Baffles*—Position the camshaft baffles vertically (top baffle surface perpendicular to the ground) with the rear of the camshaft baffle pointing down.

12.6.3.4 *Cylinder Heads*—Position the cylinder heads with RAC gasket surface pointing down.

12.6.3.5 *Front Cover*—Position the front cover in the same orientation as it is installed in the engine.

12.6.3.6 *Oil Pan*—Position the oil pan upside down, with the pan rail at a 45° angle, with sump end pointing down.

12.6.3.7 *Oil Pan Baffles*—Position the oil pan baffles vertically on the front edges.

12.6.3.8 *Oil Screen and Pickup Tube*—Position the oil screen and pickup tube in an inverted orientation relative to how they are installed in the engine; that is the oil screen facing upwards and the pickup tube open-end pointing downwards. Orient the pickup tube with a downward slope in such a way that the face of the oil screen rests at a 10° to 12° angle with the horizontal plane. A fixture may be necessary to support the oil screen and pickup tube. (Existing fixture to hold the pick-up tube can be utilized and the open-end of the pick-up tube can be made to rest on table, as shown in Fig. A7.42).

13. Interpretation of Results

13.1 *Parts Rating Area—Environment:*

13.1.1 Ensure that the ambient atmosphere of the parts rating area is reasonably free of contaminants, and the temperature maintained at 24 °C ± 3 °C.

13.1.2 Rate valve decks and rocker arm covers under cool white fluorescent lighting exhibiting approximately 4100 K color temperature, a CRI of 62 and an illumination level of 3800 lx to 5400 lx. All background and adjacent surfaces shall be flat white.

13.1.3 Rate pistons, RAC baffles, timing chain cover, oil pan and oil pan baffle against a white background using white fluorescent bulbs and a 100 % white deflector. Maintain the illumination level between 3800 lx to 6500 lx, and measure the illumination level 355 mm from the desk top.

13.1.4 If multiple ratings are deemed necessary of a given part or parts, consensus rating may be used according to the following: The raters shall be from the same laboratory or from an outside rater if required (no Red, White, or Blue rater available at the lab). Report only one rating value, and this value shall be agreed to by the original rater involved. Document any consensus rating in the comment section of the test report.

13.1.5 All raters of Sequence VH engine parts shall attend an ASTM Standardized Testing Deposit Rating Workshop annually and produce data that meet the ASTM definitions of Blue, Red, or White for varnish and sludge. If a rater is unable to meet the requirements, the rater can continue to rate Sequence VH parts during a grace period of 45 days after the completion of the workshop and can follow the procedure described in 13.1.6 or 13.1.9 to generate varnish and sludge data respectively that meet the ASTM definitions of Blue, Red, or White.

13.1.6 A rater who is unable to meet the requirement in 13.1.5 for varnish can schedule a visit to the TMC to generate data on ASTM Standardized Testing Deposit Rating Workshop parts and receive an assessment of rating performance compared to data collected at recent workshops. Visits to the TMC will be scheduled based on availability of parts.

13.1.7 The TMC selects a minimum of 16 parts from a collection of workshop parts for the rater to rate varnish and a minimum of nine sludge parts. The TMC provides rating booths and lights, but the rater is responsible for providing any necessary rating aids. The TMC analyzes the data and determine if the requirement in 13.1.5 has been met. If the requirement in 13.1.5 has not been met, any time remaining in the grace period of 45 days is forfeited.

13.1.8 A second attempt to generate varnish rating data at the TMC is permitted only after the rater receives training from an experienced industry rater. The experienced industry rater shall verify to the TMC, in writing, that the rater training has taken place. No more than two attempts are permitted between ASTM Light Duty Deposit Rating Workshops.

13.1.9 A rater who is unable to meet the requirement in 13.1.5 for sludge can schedule a visit to a laboratory other than his or hers that has a rater that has obtained a Blue, Red or White sludge rating at the last workshop and has Sequence V sludge hardware available for training as dictated by the hosting laboratory. At the conclusion of the training the rater will need to submit a referee rating comparing his or her ratings to the hosting lab's rater on Sequence V parts chosen by the host laboratory for TMC review. The TMC will use the last workshop standard deviations and host rater's results as targets to compute the color status. If the rater achieves Blue, Red or White status the rater is approved to rate Sequence V sludge parts. A second attempt to generate acceptable data can be scheduled at another lab if needed.

13.2 *Sludge Ratings:*

Documents
Document Sharing Hub

Full document details: ASTM D8256-24

13.2.1 Rate the following parts for sludge deposits: RAC (2), valve deck (2), camshaft baffle (2), timing chain cover, oil pan, and oil pan baffle. Use the rating locations identified on the rating worksheets (see Annex A14). Determine the ratings using the techniques detailed in ASTM Deposit Rating Manual 20. Perform the sludge ratings before performing any other required ratings or measurements.

13.2.2 *Average Sludge (Unweighted Average of 9 Parts):*

13.2.2.1 To determine the sludge rating merit for each part, use the self-weighting procedure as follows:

(1) Determine the sludge depth at each of the sites shown on rating worksheets using the gauge listed in A12.3. A site is defined as a diameter circular area of 20 mm. Narrow sludge gauges for specific sites in the valve decks shall have same dimensions as the standard sludge gauges, as shown in ASTM Rating Manual 20, with the exception of the width, which shall be 12.7 mm.

(2) Determine an interpolated sludge value for a designated site that exhibits more than one level of sludge depth within this area. This value is generated by multiplying each rated value's volume factor by the percentage of area covered, totaling these volume factor percentages, to determine the rating for the site. As an example, if a site was determined to be 50 % A and 50 % E, the calculation would be: 50 % of the average sludge depth factor for A (or 1.0), plus 50 % of the average sludge depth factor for E (or 16.0); that is: ([0.5 × 1.0 = 0.5] + [0.5 × 16.0 = 8] = 8.5), and the calculated site sludge depth would be a D. In the event that there are areas where it is apparent that deposits had been formed, but are no longer adhering to the part, the rating site is the closest point to the designated point that eliminates the voided area from the 20 mm rating area.

(3) Add the total rating checks made for each line on the appropriate worksheets. These shall equal 10 or 20, depending on the part that is rated.

(4) Multiply the total rating checks made on each line by ten or five, respectively (refer to (*3*), to obtain the percent covered by the rated sludge depth. The grand total shall equal 100 %.

(5) Convert the percent covered by the rated sludge depth at each location to a volume factor using the procedure shown in ASTM Deposit Rating Manual 20.

(6) Add the volume factors on each line to determine the total volume factor. Use ASTM Deposit Rating Manual 20 to convert the total volume factor to the sludge merit rating.

13.2.2.2 *Flaky, Bubbly Sludge Deposits*—Since the occurrence of flaky, bubbly sludge deposits is thought to have a possible detrimental effect on long-term engine lubrication system performance, document the occurrence of this type of deposit in the Supplemental Operational Data section of the Final Test Report. Record the engine part(s) where this type of deposit was observed and the total percent of the surface area covered. The following is suggested wording–approximately 6 % of the (left or right) rocker arm cover was found to exhibit flaky, bubbly sludge deposits.

13.2.2.3 *Industry Correction Factor*—Apply an AES industry correction factor of –0.32 merits to all reference oil tests conducted on fuel batches GI0321NX10 and GI0321NX10-1, irrespective of completion date. Apply an AES industry correction factor of –0.32 to all non-reference oil tests completing on or after March 16, 2021 and using fuel batches GI0321NX10 and GI0321NX10-1.

13.3 *Varnish Ratings:*

13.3.1 *Preparation of Parts*—Rate the following parts for varnish deposits–piston skirts (8, thrust side only) and left and right camshaft baffles. Rate the entire piston skirt and the upper 50 % and report separately. Fig. A14.11 shows the rating grid to be used. Create a rating grid using template in Fig. A14.12. The rating grid should be 74 mm wide across the top. Perform the varnish ratings after the sludge ratings are completed. The rating locations and dimensions shall conform with the locations and dimensions detailed on the rating worksheets (see Annex A14). Avoid disturbing adjacent sludge deposits when the parts are being prepared for varnish ratings. Heavy sludge can be removed from a varnish rating area prior to wiping with a 25 mm rubber spatula. Wipe all parts firmly with wiping materials specified in ASTM Deposit Rating Manual 20. Firmly rub all wiping areas in the same direction until the surface is dry and free of sludge (until no more deposit is present on the wiping material after wiping).

13.3.2 *Average Varnish (Unweighted Average of three Parts)*—Use the procedure detailed as follows, to determine the varnish rating of each part:

13.3.2.1 Rate any areas where varnish deposits have been altered during disassembly or sludge removal according to deposits on the surrounding non-altered areas. Do not rate altered areas as *clean*.

13.3.2.2 Determine original varnish ratings of all parts by comparison of the deposit on the rating location using the ASTM Rust/Varnish/Lacquer Rating Scale for non-rubbing parts from ASTM Deposit Rating Manual 20.

13.4 *Clogging:*

13.4.1 *Oil Screen Clogging:*

13.4.1.1 Use the following procedure to determine the percentage of the oil screen clogged by sludge:

(1) Use a device to blow air across the screen to remove any retained oil on the screen. A suitable device can be obtained from the supplier listed in X2.1.11.

(2) Regulate the air pressure to 130 kPa ± 10 kPa.

(3) Connect the device to the screen.

(4) Allow air to flow for 5 s to 10 s.

(5) Remove the device and rate.

13.4.1.2 Flexible, transparent rating aids can be made for different surface areas, with different area resolutions that is, (2.5 %, 5 %, 10 %, and so forth) so that when compared to the test screen's surface, a more accurate determination of surface clogging is possible.

13.4.1.3 Determine the percentage of the total screen opening that is obstructed with debris. Determine the percentage of the total screen opening that is obstructed with sludge. Label as sludge all matter present on the oil screen that is not immediately recognizable as debris. Label all matter of indeterminate composition as sludge.

13.5 *Sticking:*

AVA Documents
Document Sharing Hub

Full document details: ASTM D8256-24

13.5.1 *Rings*—Record the number of stuck compression and oil rings. Definitions to classify the degree and type of sticking are detailed in 3.1.4 and 3.1.8. List both hot and cold stuck rings on the Test Results Summary page. Denote hot or cold stuck rings on the Supplemental Operational Data page and include the ring location (top, second or oil control) and the piston number.

13.6 *Used Oil Analyses:*

13.6.1 Perform the following analyses on the used oil samples taken every 24 h and on the final drain: Viscosity at 40 °C (Test Method D445), wear metals (Test Method D5185), and fuel dilution (Test Method D3525). Take samples at 0 h, 24 h, 48 h, 72 h, 96 h, 120 h, 144 h, 168 h, 192 h, and 216 h.

13.6.2 *Missed Chemical Analyses*—If prescribed sample volume is not enough to complete all analyses listed herein, list the missing results as "NM" (not measured) and include an appropriate comment in the test report. Chemical analyses shall not be used to judge test validity.

13.6.3 *Fuel Dilution*—Determine the fuel dilution, mass percent, by gas chromatography (see Test Method D3525, with the following modifications) on the used oil samples.

13.6.3.1 Use C16 in place of C14 for the internal standard (1 µL injector volume).

13.6.3.2 Presume that all components lighter than C16 are fuel.

13.6.3.3 The integrator should establish a horizontal baseline under the output curve until the leading edge of C16 is reached. Establish a second baseline extending horizontally from the output curve, at the intersection of the output curve, and the leading edge of the C16 peak.

13.6.3.4 Column details are 3050 mm by 3.2 mm SS; and the packing material is 5 % OV-1 on Chromosorb W HP.

13.6.3.5 Increase the oven temperature from 60 °C to 320 °C, with the rate of change of temperature controlled at 8 °C/min. Hold the temperature at 320 °C for 16 min to elute oil.

14. Assessment of Test Validity

14.1 *General*—The testing laboratory shall assess the validity of tests that have deviations from the procedure. The TMC and Test Sponsor shall assist the laboratory in the determination of calibration test validity, if requested by the laboratory. Use the following guidelines as a basis for determining test validity:

14.2 *Used Oil Analyses—Interpretation:*

14.2.1 *Iron and Aluminum Content*—The aluminum and iron content of the used oil samples can indicate the level of wear that occurs during a test. Increased camshaft bearing wear causes the aluminum content to increase. Increased camshaft, rocker arm, and cylinder bore wear causes the iron content to increase. The rate of change in iron levels indicates the rate of change of wear levels, although wear tends to be linear throughout the test.

14.2.2 *Silicon Content*—Silicon content indicates the level of contamination of the oil from external sources and silicone-based gaskets. Silicone-based gaskets are used to seal the oil pan and rocker covers. Investigate the presence of silicone-based sealers, the cleanliness of engine parts during build-up, the cleanliness of the intake air, and the cleanliness of containers used for dispensing and sampling the oil if high levels of silicon are experienced.

14.2.3 *Fuel Dilution*—Fuel dilution indicates the degree to which the crankcase oil has been diluted with fuel. Fuel dilution of the crankcase oil is necessary to achieve adequate test severity. However, excessive fuel dilution can promote increased sludge severity and component wear. Investigate a higher level of fuel dilution than is normally noted.

14.3 *Blowby Flow Rate*—The corrected average blowby flow rate during Stage II during the first 120 h of the test shall fall within the range from 60 L/min to 70 L/min. Blowby should remain relatively constant throughout the entire test. Blowby typically drops slightly in the first 23 h of the test. Excursions below 60 L/min are acceptable as long as the average is between 60 L/min and 70 L/min. If two consecutive Stage II readings within the first 120 h, are less than 56 L/min or the average is not within the prescribed limits, consider the test operationally invalid.

14.4 *Manifold Absolute Pressure (MAP)*—Throttle position is set by manifold absolute pressure during Stage I and II to account for the altitude of the laboratory, ambient barometric pressure, and the mechanical efficiency of the engine.

14.5 *Fuel Consumption Rate*—The fuel consumption rate should not exceed 9.0 kg/h, 19.0 kg/h, and 3.5 kg/h for Stages I, II and III, respectively.

14.6 *Oil Consumption:*

14.6.1 Oil consumption should not occur early in the test. During this time period of the test, fuel dilution levels may increase oil levels above the test full mark. If the oil level is above the test full mark by 200 g or more, then the engine, EEC system, fuel injectors, and so forth should be checked for a malfunction that could be causing excessive fuel dilution.

14.6.2 The total amount of new oil added during the test shall not exceed 2000 g and no more than 400 g can be added at any 24 h oil leveling period.

14.7 *Engine Parts Replacement*—Parts that are rated to determine the final test results cannot be replaced during the test. The following parts can be replaced, if necessary (record the circumstances involved in the replacement): ignition system components, EEC module, PCV valve, seals and gaskets, valves or valve springs, fuel injectors, oil separator (PCV system), cooling system parts, oil filter adapter and spark plugs.

14.8 *Quality Index*—Requirements for quality index are listed in Annex A6. If the end of test quality index value is below 0.000 for reference oil tests, review the test operations with the TMC. The TMC issues a letter to the laboratory and the test purchaser on its opinion. The laboratory documents its comments regarding end of test quality index values less than 0.000 for non-reference oil tests. The laboratory or test purchaser might request TMC review of test operations for non-reference oil tests. The TMC issues a letter to document its opinion. If a test has greater than 2 h without recorded operational data on any controlled parameter, the test is operationally invalid.

AVA Documents
Document Sharing Hub

Full document details: ASTM D8256-24

14.9 Report results on all reference oil tests run to completion, regardless of validity.

15. Final Test Report

15.1 *Report Forms*—For reference oil tests, the standardized report form set and data dictionary for reporting test results and for summarizing the operational data are required.

16. Precision and Bias

16.1 *Test Precision—Reference Oils:*

16.1.1 *Intermediate Precision Conditions*—Conditions where test results are obtained with the same test method using the same test oil, with changing conditions such as operators, measuring equipment, test stands, test engines, and time.

NOTE 9—"Intermediate precision" is the appropriate term for this test method rather than "repeatability," which defines more rigorous within-laboratory conditions.

16.1.1.1 *Intermediate Precision Limit (i.p.)*—The difference between two results obtained under intermediate precision conditions that would, in the long run, in the normal and correct conduct of the test method, exceed the values in Table 7 in only one case in twenty.

16.1.2 *Reproducibility Conditions*—Conditions where test results are obtained with the same test method using the same test oil in different laboratories with different operators using different equipment.

16.1.2.1 *Reproducibility Limit (R)*—The difference between two results obtained under reproducibility conditions that would, in the long run, in the normal and correct conduct of the test method, exceed the values in Table 7 in only one case in twenty.

TABLE 7 Test Precision for Sequence VH[A]

Quantity, units	Intermediate Precision[B]		Reproducibility[C]	
	S_{ip}[D]	*ip*	S_R[D]	*R*
Average Engine Sludge, merits	0.50	1.38	0.50	1.38
Rocker Cover Sludge,[E] merit	0.2194	0.6081	0.2532	0.7018
Average Engine Varnish, merits	0.25	0.69	0.31	0.86
Average Piston Varnish, merits	0.54	1.50	0.64	1.77

[A] These statistics are based on 40 tests conducted on 6 stands at 4 laboratories on ASTM TMC Reference Oils 940, 1009, and 1011, and were calculated on June 14, 2017.
[B] See 16.1.1.
[C] See 16.1.2.
[D] *S* is the estimated standard deviation.
[E] This parameter is transformed using ln(10-result). When comparing two test results on this parameter, first apply this transformation to each test result. Compare the absolute difference between the transformed results with the appropriate (intermediate precision or reproducibility) precision limit.

16.2 *Bias*—Bias will be determined by applying an accepted statistical technique to reference oil test results, and when a significant bias is determined, a severity adjustment will be permitted for non-reference oil test results.

17. Keywords

17.1 lubricating oils; Sequence VH; sludge and varnish; spark-ignition automotive engine; stop-and-go service

ANNEXES

(Mandatory Information)

A1. ASTM TEST MONITORING CENTER: ORGANIZATION

A1.1 The Test Monitoring Center (TMC), an affiliate of ASTM International, is a nonprofit organization located at 203 Armstrong Drive, Freeport, PA 16229. It is staffed to administer engineering studies; conduct laboratory visits; perform statistical analyses of test data; to blend, store, and ship reference oils; and to provide associated administrative functions connected with the referencing and calibration of various lubricant tests. The TMC maintains a close connection with test sponsors, test developers, the surveillance panels, and the testing laboratories. The management of these functions is vested in the ASTM Test Monitoring System Executive Committee, whose members are elected by Subcommittee D02.B0. The TMC operates under its associated bylaws and regulations, the bylaws of Committee D02 and of Subcommittee D02.B0, and the Rules and Regulations of the ASTM Test Monitoring System. The operating income of the TMC is obtained from fees levied on the reference oils supplied and on test reviews. These fees are set by the Test Monitoring Center Board of Directors.

Documents
Document Sharing Hub
Full document details: ASTM D8256-24

A2. ASTM TEST MONITORING CENTER: CALIBRATION PROCEDURES

A2.1 *Reference Oils*—These oils are formulated or selected to represent specific chemical, or performance levels, or both. They are usually supplied directly to a testing laboratory under code numbers to ensure that the laboratory is not influenced by prior knowledge of acceptable results in assessing test results. The TMC determines the specific reference oil the laboratory shall test.

A2.1.1 *Reference Oil Data Reporting*—Test laboratories that receive reference oils for stand calibration shall submit data to the TMC on every sample of reference oil they receive. If a shipment contains any missing or damaged samples, the laboratory shall notify the TMC immediately.

A2.2 *Calibration Testing*:

A2.2.1 Full-scale calibration testing shall be conducted at regular intervals. These full-scale tests are conducted using coded reference oils supplied by the TMC. It is a laboratory's responsibility to keep the on-site reference oil inventory at or above the minimum level specified by the TMC test engineers.

A2.2.2 *Test Stands Used for Non-Standard Tests*—If a non-standard test is conducted on a previously calibrated test stand, the laboratory shall contact the TMC regarding calibration status of the test stand prior to running standard tests.

A2.3 *Reference Oil Storage*—Store reference oils under cover in locations where the ambient temperature is between –10 °C and +50 °C.

A2.4 *Analysis of Reference Oil*—Unless specifically authorized by the TMC or appropriate test procedure, do not analyze TMC reference oils, either physically or chemically. Do not resell ASTM reference oils or supply them to other laboratories without the approval of the TMC. The reference oils are supplied only for the intended purpose of obtaining calibration under the ASTM Test Monitoring System. Any unauthorized use is strictly forbidden. The testing laboratory tacitly agrees to use the TMC reference oils exclusively in accordance with the TMC's published Policies for Use and Analysis of ASTM Reference Oils, and to run and report the reference oil test results according to TMC guidelines. Additional policies for the use and analysis of ASTM Reference Oils are available from the TMC.

A2.5 *Conducting a Reference Oil Test*—When laboratory personnel are ready to run a reference calibration test, they shall request an oil code via the TMC website.

A2.6 *Reporting Reference Oil Test Results*—Upon completion of the reference oil test, the test laboratory transmits the data electronically to the TMC, as described in Section 15. The TMC reviews the data and contacts the laboratory engineer to report the laboratory's calibration status. All reference oil test results, whether aborted, invalidated, or successfully completed, shall be reported to the TMC.

A2.6.1 All deviations from the specified test method shall be reported.

A3. ASTM TEST MONITORING CENTER: MAINTENANCE ACTIVITIES

A3.1 *Special Reference Oil Tests*—To ensure continuous severity and precision monitoring, calibration tests are conducted periodically throughout the year. Occasionally, the majority or even all of the industry's test stands will conduct calibration tests at roughly the same time. This could result in an unacceptably large time frame when very few calibration tests are conducted. The TMC can shorten or extend calibration periods as needed to provide a consistent flow of reference oil test data. Adjustments to calibration periods are made such that laboratories incur no net loss or gain in calibration status.

A3.2 *Special Use of the Reference Oil Calibration System*—The surveillance panel has the option to use the reference oil system to evaluate changes that have potential impact on test severity and precision. This option is only taken when a program of donated tests is not feasible. The surveillance panel and the TMC shall develop a detailed plan for the test program. This plan requires all reference oil tests in the program to be completed as close to the same time as possible, so that no laboratory/stand calibration status is left pending for an excessive length of time. In order to maintain the integrity of the reference oil monitoring system, each reference oil test is conducted so as to be interpretable for stand calibration. To facilitate the required test scheduling, the surveillance panel may direct the TMC to lengthen and shorten reference oil calibration periods within laboratories such that the laboratories incur no net loss or gain in calibration status. To ensure accurate stand, or laboratory, or both severity assessments, conduct non-reference oil tests the same as reference oil tests.

A3.3 *Donated Reference Oil Test Programs*—The surveillance panel is charged with maintaining effective reference oil test severity and precision monitoring. During times of new parts introductions, new or re-blended reference oil additions, and procedural revisions, it may be necessary to evaluate the possible effects on severity and precision levels. The surveillance panel may choose to conduct a program of donated reference oil tests in those laboratories participating in the monitoring system, in order to quantify the effect of a particular change on severity and precision. Typically, the surveillance panel requests its panel members to volunteer enough reference oil test results to create a robust data set. Based on laboratory

AVA Documents
Document Sharing Hub

Full document details: ASTM D8256-24