This international standard was developed in accordance with internationally recognized principles on standardization established in the Decision on Principles for the Development of International Standards, Guides and Recommendations issued by the World Trade Organization Technical Barriers to Trade (TBT) Committee.

Designation: D8291 – 24a

Standard Test Method for Evaluation of Performance of Automotive Engine Oils in the Mitigation of Low-Speed, Preignition in the Sequence IX Gasoline Turbocharged Direct-Injection, Spark-Ignition Engine[1]

This standard is issued under the fixed designation D8291; the number immediately following the designation indicates the year of original adoption or, in the case of revision, the year of last revision. A number in parentheses indicates the year of last reapproval. A superscript epsilon (ε) indicates an editorial change since the last revision or reapproval.

INTRODUCTION

Portions of this test method are written for use by laboratories that make use of ASTM Test Monitoring Center (TMC)[2] services (see Annex A1 – Annex A4).

The TMC provides reference oils, and engineering and statistical services to laboratories that desire to produce test results that are statistically similar to those produced by laboratories previously calibrated by the TMC.

In general, the test purchaser decides if a calibrated test stand is to be used. Organizations such as the American Chemistry Council require that a laboratory utilize the TMC services as part of their test registration process. In addition, the American Petroleum Institute and the Gear Lubricant Review Committee of the Lubricant Review Institute (SAE International) require that a laboratory use the TMC services in seeking qualification of oils against their specifications.

The advantage of using the TMC services to calibrate test stands is that the test laboratory (and hence the Test Purchaser) has an assurance that the test stand was operating at the proper level of test severity. It should also be borne in mind that results obtained in a non-calibrated test stand may not be the same as those obtained in a test stand participating in the ASTM TMC services process.

Laboratories that choose not to use the TMC services may simply disregard these portions.

ASTM International policy is to encourage the development of test procedures based on generic equipment. It is recognized that there are occasions where critical/sole-source equipment has been approved by the technical committee (surveillance panel/task force) and is required by the test procedure. The technical committee that oversees the test procedure is encouraged to clearly identify if the part is considered critical in the test procedure. If a part is deemed to be critical, ASTM encourages alternate suppliers to be given the opportunity for consideration of supplying the critical part/component providing they meet the approval process set forth by the technical committee.

An alternate supplier can start the process by initiating contact with the technical committee (current chairs shown on ASTM TMC website). The supplier should advise on the details of the part that is intended to be supplied. The technical committee will review the request and determine feasibility of an alternate supplier for the requested replacement critical part. In the event that a replacement critical part has been identified and proven equivalent the sole-source supplier footnote shall be removed from the test procedure.

1. Scope*

1.1 This laboratory engine test evaluates the ability of an automotive engine to mitigate preignition in the combustion chambers in gasoline, turbocharged, direct-injection (GTDI) engines under low-speed and high-load operating conditions. This test method is commonly known as the Ford low-speed, preignition (LSPI) test.

[1] This test method is under the jurisdiction of ASTM Committee D02 on Petroleum Products, Liquid Fuels, and Lubricants and is the direct responsibility of Subcommittee D02.B0 on Automotive Lubricants.

Current edition approved Oct. 1, 2024. Published October 2024. Originally approved in 2019. Last previous edition approved in 2024 as D8291 – 24. DOI: 10.1520/D8291-24A.

[2] Until the next revision of this test method, the ASTM Test Monitoring Center will update changes in the test method by means of information letters. Information letters may be obtained from the ASTM Test Monitoring Center, 203 Armstrong Drive, Freeport, PA 16229. Attention: Director. This edition incorporates revisions in all information Letters through No. 24-2.

*A Summary of Changes section appears at the end of this standard

Copyright © ASTM International, 100 Barr Harbor Drive, PO Box C700, West Conshohocken, PA 19428-2959. United States

Documents
Document Sharing Hub
Full document details: ASTM D8291-24a

1.1.1 In vehicles, equipped with relatively small GTDI spark-ignition engines, preignition has occasionally occurred when the vehicles are operated under low-speed and high-load conditions. Uncontrolled, preignition may cause destructive engine damage.

1.2 The values stated in SI units are to be regarded as standard. No other units of measurement are included in this standard.

1.2.1 *Exceptions*—Where there is no direct SI equivalent such as screw threads, national pipe threads/diameters, tubing size, wire gauge, or specified single source equipment.

1.3 *This standard does not purport to address all of the safety concerns, if any, associated with its use. It is the responsibility of the user of this standard to establish appropriate safety, health, and environmental practices and determine the applicability of regulatory limitations prior to use.*

1.4 *This international standard was developed in accordance with internationally recognized principles on standardization established in the Decision on Principles for the Development of International Standards, Guides and Recommendations issued by the World Trade Organization Technical Barriers to Trade (TBT) Committee.*

2. Referenced Documents

2.1 *ASTM Standards:*[3]

D86 Test Method for Distillation of Petroleum Products and Liquid Fuels at Atmospheric Pressure

D130 Test Method for Corrosiveness to Copper from Petroleum Products by Copper Strip Test

D235 Specification for Mineral Spirits (Petroleum Spirits) (Hydrocarbon Dry Cleaning Solvent)

D323 Test Method for Vapor Pressure of Petroleum Products (Reid Method)

D381 Test Method for Gum Content in Fuels by Jet Evaporation

D445 Test Method for Kinematic Viscosity of Transparent and Opaque Liquids (and Calculation of Dynamic Viscosity)

D525 Test Method for Oxidation Stability of Gasoline (Induction Period Method)

D664 Test Method for Acid Number of Petroleum Products by Potentiometric Titration

D1298 Test Method for Density, Relative Density, or API Gravity of Crude Petroleum and Liquid Petroleum Products by Hydrometer Method

D1319 Test Method for Hydrocarbon Types in Liquid Petroleum Products by Fluorescent Indicator Adsorption

D2622 Test Method for Sulfur in Petroleum Products by Wavelength Dispersive X-ray Fluorescence Spectrometry

D2699 Test Method for Research Octane Number of Spark-Ignition Engine Fuel

D2700 Test Method for Motor Octane Number of Spark-Ignition Engine Fuel

D2709 Test Method for Water and Sediment in Middle Distillate Fuels by Centrifuge

D3120 Test Method for Trace Quantities of Sulfur in Light Liquid Petroleum Hydrocarbons by Oxidative Microcoulometry

D3231 Test Method for Phosphorus in Gasoline

D3237 Test Method for Lead in Gasoline by Atomic Absorption Spectroscopy

D3525 Test Method for Gasoline Fuel Dilution in Used Gasoline Engine Oils by Wide-Bore Capillary Gas Chromatography

D4485 Specification for Performance of Active API Service Category Engine Oils

D4739 Test Method for Base Number Determination by Potentiometric Hydrochloric Acid Titration

D4858 Test Method for Determination of the Tendency of Lubricants to Promote Preignition in Two-Stroke-Cycle Gasoline Engines (Withdrawn 2022)[4]

D5185 Test Method for Multielement Determination of Used and Unused Lubricating Oils and Base Oils by Inductively Coupled Plasma Atomic Emission Spectrometry (ICP-AES)

D5453 Test Method for Determination of Total Sulfur in Light Hydrocarbons, Spark Ignition Engine Fuel, Diesel Engine Fuel, and Engine Oil by Ultraviolet Fluorescence

D5892 Specification for Type IV Polymer-Modified Asphalt Cement for Use in Pavement Construction (Withdrawn 2005)[4]

D5967 Test Method for Evaluation of Diesel Engine Oils in T-8 Diesel Engine

D6593 Test Method for Evaluation of Automotive Engine Oils for Inhibition of Deposit Formation in a Spark-Ignition Internal Combustion Engine Fueled with Gasoline and Operated Under Low-Temperature, Light-Duty Conditions

D6984 Test Method for Evaluation of Automotive Engine Oils in the Sequence IIIF, Spark-Ignition Engine

D7414 Test Method for Condition Monitoring of Oxidation in In-Service Petroleum and Hydrocarbon Based Lubricants by Trend Analysis Using Fourier Transform Infrared (FT-IR) Spectrometry

D7624 Test Method for Condition Monitoring of Nitration in In-Service Petroleum and Hydrocarbon-Based Lubricants by Trend Analysis Using Fourier Transform Infrared (FT-IR) Spectrometry

D8047 Test Method for Evaluation of Engine Oil Aeration Resistance in a Caterpillar C13 Direct-Injected Turbocharged Automotive Diesel Engine

D8279 Test Method for Determination of Timing-Chain Wear in a Turbocharged, Direct-Injection, Spark-Ignition, Four-Cylinder Engine

E29 Practice for Using Significant Digits in Test Data to Determine Conformance with Specifications

[3] For referenced ASTM standards, visit the ASTM website, www.astm.org, or contact ASTM Customer Service at www.astm.org/contact. For *Annual Book of ASTM Standards* volume information, refer to the standard's Document Summary page on the ASTM website.

[4] The last approved version of this historical standard is referenced on www.astm.org.

AVA Documents
Document Sharing Hub

Full document details: ASTM D8291-24a

2.2 *American National Standards Institute Standards:*[5]
ANSI MC96.1 Temperature Measurement-Thermocouples

3. Terminology

3.1 *Definitions:*

3.1.1 *engine oil, n*—a liquid that reduces friction or wear, or both, between the moving parts within an engine; removes heat, particularly from the underside of pistons; and serves as a combustion gas sealant for piston rings.

3.1.1.1 *Discussion*—It may contain additives to enhance certain properties. Inhibition of engine rusting, deposit formation, valve train wear, oil oxidation, and foaming are examples. **D5892**

3.1.2 *lambda, n*—the ratio of actual air mass induced, during engine operation, divided by the theoretical air mass requirement at the stoichiometric air-fuel ratio for the given fuel.

3.1.2.1 *Discussion*—A lambda value of 1.0 denotes a stoichiometric air-fuel ratio. **D6593**

3.1.3 *lubricant test monitoring system (LTMS), n*—an analytical system in which ASTM calibration test data are used to manage test precision and severity (bias). **D6984**

3.1.4 *PCM, n*—an engine control unit, most commonly called the powertrain control module (PCM), is an electronic device that instantaneously controls a series of actuators on an internal combustion engine to ensure optimal engine performance.

3.1.5 preignition, *n—in a spark-ignition engine*, ignition of the mixture of fuel and air in the combustion chamber before the passage of the spark. **D4858**

3.1.6 *quantity, n—in the SI*, a measurable property of a body or substance where the property has a magnitude expressed as the product of a number and a unit; there are seven, well-defined base quantities (length, time, mass, temperature, amount of substance, electric current and luminous intensity) from which all other quantities are derived (for example, volume whose SI unit is the cubic metre).

3.1.6.1 *Discussion*—Symbols for quantities must be carefully defined; are written in italic font, can be upper or lower case, and can be qualified by adding further information in subscripts, or superscripts, or in parentheses (for example, t_{fuel} = 40 °C, where t is used as the symbol for the quantity Celsius temperature and t_{fuel} is the symbol for the specific quantity fuel temperature). **D8047**

3.2 *Acronyms and Abbreviations (italic font denotes the symbol for a quantity):*

3.2.1 *AvPIE*—average preignition events

3.2.2 CAN—controller area network

3.2.3 DAC—digital-to-analog converter

3.2.4 DACA—data acquisition and control automation

3.2.5 e_i—prediction error

3.2.6 ECU—electronic control unit

3.2.7 EEC—electronic engine control

3.2.8 *F*—quantile

3.2.9 *G*—skewness

3.2.10 GTDI—gasoline turbocharged direct injection

3.2.11 *IBP*—initial boiling point

3.2.12 *ID*—internal diameter

3.2.13 *ip*—intermediate precision

3.2.14 *K*—kurtosis

3.2.15 LCR—lower compression ring

3.2.16 LTMS—lubricant test monitoring system

3.2.17 LSPI—low-speed preignition

3.2.18 *M*—mean

3.2.19 MAF—mass air flow

3.2.20 *MAP*—manifold absolute pressure

3.2.21 *MAPT*—manifold absolute pressure and temperature

3.2.22 *MFB*—mass fraction burn

3.2.23 *MFB2*—mass fraction burn at 2 %

3.2.24 PCM—powertrain control module

3.2.25 PCV—positive crankcase ventilation

3.2.26 PID—parameter identification

3.2.27 PIE—preignition event

3.2.28 *PMAX*—maximum pressure (see Note 5)

3.2.29 *PMAXV*—pressure maximum voltage

3.2.30 *PMINV*—pressure minimum voltage

3.2.31 *PP*—peak pressure (see Note 5)

3.2.32 P/N—part number

3.2.33 *R*—reproducibility

3.2.34 *S*—standard deviation

3.2.35 UCR—upper compression ring

3.2.36 VCT—variable valve timing

3.2.37 WOT—wide open throttle

3.2.38 Z_i—exponentially weighted moving average

4. Summary of Test Method

4.1 The test procedure is a "flush and run" test, that is the test engine is used for multiple tests and the next test oil is used to flush the previous test oil from the engine.

4.2 The test procedure is conducted in four iterations. Each iteration is 175 000 engine cycles in length.

4.3 Low-engine speed and high-load, steady-state conditions are used to generate (*PIE*) events, which are counted throughout each of the four 175 000 engine cycles.

4.4 Combustion pressure is measured directly in each cylinder to provide documentary evidence of the occurrence of preignition events.

5. Significance and Use

5.1 This test method evaluates the ability of an automotive engine to mitigate preignition in the combustion chamber in

[5] Available from American National Standards Institute (ANSI), 25 W. 43rd St., 4th Floor, New York, NY 10036, http://www.ansi.org.

AVA Documents Document Sharing Hub

Full document details: ASTM D8291-24a

turbocharged, direct injection, gasoline engines under low-speed and high-load operating conditions.

5.2 Varying quality reference oils, with known preignition tendencies, were used in developing the operating conditions of the test procedure.

5.3 The test method has applicability in gasoline-engine-oil specifications and is expected to be used in specifications and classifications of engine lubricating oils, such as the following:

5.3.1 Specification D4485.

5.3.2 ILSAC GF-6.

5.3.3 SAE Classification J183.

6. Apparatus (General Description)

6.1 *Test Engine*—The test engine is a spark-ignition, four-stroke, four-cylinder, gasoline, turbocharged, direct-injection engine with a displacement of 2.0 L. Features of this engine include variable camshaft timing, dual overhead camshafts driven by a timing chain, four valves per cylinder, and electronic direct-fuel injection. It is based on the Ford Motor Co. 2012 Explorer engine.[6,7]

6.2 Configure the test stand to accept the test engine. All special equipment necessary for conducting this test is listed below.

6.3 Use appropriate air-conditioning apparatus to control the temperature, pressure, and humidity of the inlet air to meet the requirements in Table 1.

6.4 Use an appropriate fuel supply system. A typical system is shown in Fig. 1.

NOTE 1—The fuel may need to be heated to maintain the fuel temperature in Table 1. As a consequence, heat may buildup in the fuel system during shutdown thereby increasing the pressure in the fuel lines. It is good practice, therefore, to include a pressure relief valve in the fuel line to relieve the pressure and to send the excess fuel back to the tank before the shutoff valve.

6.5 The control and data acquisition system shall meet the requirements listed in Annex A5.

6.6 *Engine Cooling System:*

6.6.1 Use the coolant-inlet and -outlet system from OH Technologies.[7,8] Typical plumbing for the external coolant system is shown in Fig. A6.2 and Fig. A6.3. Use a coolant flowmeter with an accuracy of ±1 %. Install the flowmeter at either the coolant inlet or coolant outlet sides of the engine. Install the flow control valve in the line running from the engine-coolant outlet to the heat exchanger. ITT standard heat exchangers[7,9] have been found suitable. Use 38 mm (1.5 in.) pipe to plumb the coolant system. Minimize the number of elbows in the cooling system. Ensure that the engine coolant flows through the tube side of the heat exchanger.

6.6.2 A radiator cap is used to limit system pressure to 105 kPa. Motorcraft RS40 P/N D2YY8100-A[7,10] has been found suitable for this application. Pressurize the coolant system to 70 kPa ± 10 kPa at the top of the coolant reservoir.

6.6.3 Control the engine-coolant flow rate and outlet temperature to meet the requirements in Table 1.

6.6.4 Inspect engine-coolant components external to the engine every three months and clean as necessary.

6.7 *Oil System Components*—All oil-system components in the engine are production configuration with the exception of the modified oil pan (Fig. A6.1) and oil-filter housing (Fig. A6.12).

6.8 Using the production oil cooler, control the oil temperature by running process water through the water side of the oil cooler. Locations of oil-temperature thermocouples are shown in Fig. A6.12.

6.9 *Dynamometer*—Use Midwest dynamometer model MW-1014A.[7,11]

6.10 *Combustion Analysis Equipment*—Use the AVL IndiSmart GigaBit 612 combustion analysis system and the AVL IndiCom combustion analysis software.[7,12] For the latter, use the amplifier and pressure settings and the standard results settings given in A10.1 and A10.2, respectively. Report the channels shown in A10.16.

6.11 *Fuel and Fuel System:*

6.11.1 *System Description*—Fig. 1 is a schematic diagram of a typical fuel-supply system. Supply an excess volume of fuel to the high-pressure fuel pump and fuel rail at all times. Introduce make-up fuel (that is, fuel used by the engine) into the loop from an external source. Mix the makeup fuel with fuel that is returned from the fuel rail (that is, fuel not used by the engine). Pump the fuel through a mixing chamber, or a small heat exchanger, to mix the two streams and to provide fuel of consistent temperature to the engine. Deliver the fuel to

TABLE 1 Oil-Flush-Procedure Conditions

Controlled Quantity, unit	Set Point
Coolant-out temperature, °C	95
Oil-gallery temperature, °C	95
Air-charge temperature, °C	43
Inlet-air temperature, °C	30
Inlet-air pressure, kPa (gauge)	0.05
Exhaust back pressure, kPa (absolute)	104
Humidity, g/kg	11.4
Fuel pressure, kPa	450 ± 37

[6] The sole source of supply of this component known to the committee at this time is Ford Motor Co., 290 Town Center Dr, Dearborn, MI 48126.

[7] If you are aware of alternative suppliers, please provide the information to ASTM International Headquarters. Your comments will receive careful consideration at a meeting of the responsible technical committee which you may attend.

[8] The sole source of supply of this part known to the committee at this time is OH Technologies, 9300 Progress Pkwy., Mentor, O 44060, USA.. Tel: +1 440 354 7007. www.ohtech.com.

[9] The sole source of supply of this part known to the committee at this time is Kinetics Engineering Corp., 2055 Silber Road, Suite 101, Houston, TX 77055.

[10] Available from Ford dealership as well as select auto parts stores.

[11] Available from Dyne Systems, Inc. W209 N17391 Industrial Drive, Jackson, WI 53037 USA 800-657-0726; dtnesystems.com and from Dyno One, Inc. 14671 N 250 W Edinburgh, IN 46124, info@dyno-one.com. Tel 812-5260500.

[12] The sole source of supply of this system known to the committee at this time is AVL Gmbh, Platz 1, A-8020, Graz, Austria, www.avl.com.

AVA Documents
Document Sharing Hub

Full document details: ASTM D8291-24a

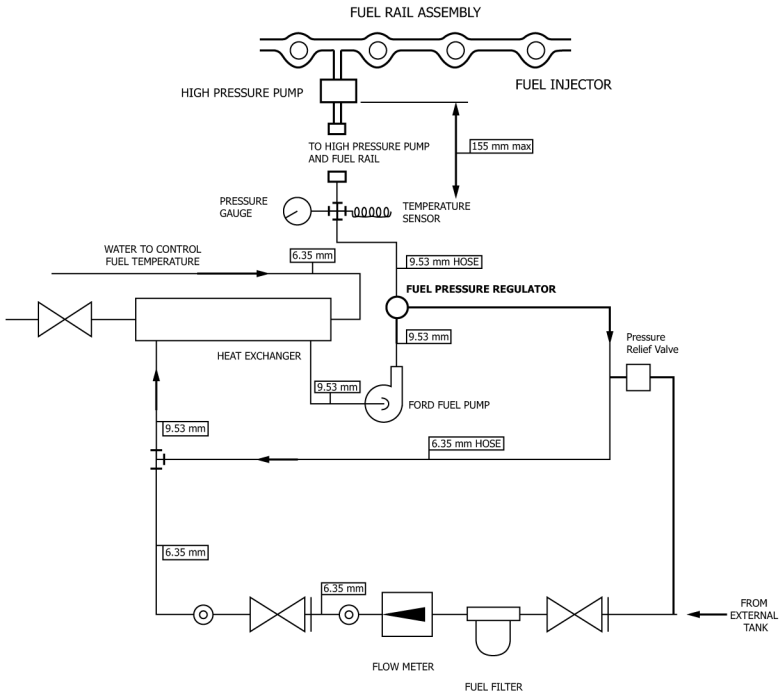

FIG. 1 Typical Fuel Supply System

a high-pressure pump (Ford P/N AG9Z-9350-B/AG9E-9D376-AB[6,7]) that boosts the pressure and supplies the fuel to the fuel rail.

6.11.2 *Controls*—Maintain the fuel temperature to the high-pressure pump at 30 °C ± 0.5 °C. To ensure good atomization of the fuel, maintain the fuel pressure to the high-pressure pump above 450 kPa ± 37 kPa. Maintain constant fuel pressure throughout the test to ensure good speed, power, and air-fuel ratio control.

6.11.3 *Test Fuel*—Approximately 340 L of Haltermann HF003 Lube Certification fuel[7,13] are required for each test. (**Warning—**Flammable, health hazard.)

6.11.4 *Fuel Batch*—Ensure each new batch of fuel is accompanied by a certificate of analysis showing that it meets the requirements shown in Test Fuel Specifications for TMC Monitored Tests, available from the ASTM Test Monitoring Center website: www.astmtmc.org. Record the fuel batch identification number in the appropriate field in the test report. If co-mingling fuel batches, document the most prevalent fuel batch in the test report. There are no restrictions on the percentages of co-mingled batches but it is always a good practice to minimize the dilution.

6.11.4.1 Fuel from a new batch can be added to a laboratory's fuel tank at any time provided it meets the requirements detailed in the fuel specification (see also 6.11.4.2).

6.11.4.2 *Fuel Batch Analysis*—Fuel shall be analyzed in accordance with industry standards. Refer to the recommendations of the Fuels Task Force which is a subgroup of the ASTM D02.B0 Technical Guidance Committee.

[13] The sole source of supply of this fuel known to the committee at this time is Haltermann Products, 1201 Sheldon Road, P.O. Box 429, Channeview, TX 777530, USA. www.haltermansolutions.com.

7. Apparatus (The Test Engine)

7.1 *Sequence IX Test Engine*—The test engine parts are available from the Ford Motor Company.[6,7] A detailed listing of all parts and P/Ns is given in Annex A7.

7.2 *Required New Engine Parts*—A new short block is required when initially referencing a stand and engine combination. This short block can be re-used provided it remains within service limits and is capable of being referenced. New crush washers and gaskets are required whenever the engine/short block is disassembled (for example, for pretest measurements or repair). New camshafts and buckets are required when first building a cylinder head. New valves are required when rebuilding a cylinder head.

7.2.1 Use short blocks with installed pistons stamped with BB on the piston crown. Where BB stamped pistons are not installed, use pistons, part number AG9Z-6108-D[14], stamped AA1 and AB1. Machined 2019 Grade BB[15] pistons (MACH2019) may also be used, where BB pistons have not been installed.

7.3 *Reusable Engine Parts*—The cylinder head can be used on subsequent short blocks as long as it remains within the service limits in the workshop manual. The parts listed in Table A7.2, Table A7.6, and Table A7.7 can be used for multiple tests as long as they are in good condition and meet the service limits in the workshop manual.

7.4 *Specially Fabricated Engine Parts*—The following subsections detail the specially fabricated engine parts required in this test method:

[14] Available from any Ford dealer.

[15] Available from Southwest Research Institute (see X1.6.4).

AVA Documents
Document Sharing Hub

Full document details: ASTM D8291-24a

7.4.1 *Inlet Air System* (see Fig. A6.8)—Fabricate the inlet air system using the stock 2012 Explorer air cleaner assembly and mass air flow (MAF) sensor as detailed in Table A7.6. Install the fresh-air tube, air-cleaner assembly, and new air filter. Modify the air-cleaner assembly to accept fittings for an inlet-air-temperature thermocouple and pressure tap. Either use the 2012 Explorer fresh-air tubes or fabricate fresh-air tubes so as to provide a separation of 1040 mm ± 25 mm from the MAF sensor to the turbocharger inlet.

7.4.2 *Oil Pan*—Modify the stock 2012 Explorer oil pan to add an oil drain plug in one of the rear locations shown in Fig. A6.1.

7.4.3 *Cylinder Head*—Use a modified cylinder head that allows the installation of in-cylinder pressure sensors. This engine part is available from TEI.[7,16]

7.4.4 *Pressure Sensor Tubes*—Install ⅜ in. OD steel tubing into the pressure sensor sleeves in the cylinder head to allow for installation of the in-cylinder pressure sensors.

7.4.5 *Valve Cover*—Modify the stock valve cover to allow the pressure sensor tubes to protrude through the cover. Seal the location where the tubes protrude through the cover to prevent oil from leaking through the penetrations.

7.4.6 *Coolant Supply Manifold*—To accept the coolant-in thermocouple (Fig. A6.2), use a coolant inlet purchased from OH Technolgies[7,8] in place of the stock coolant inlet.

7.4.7 *Coolant Return Manifold*—To accept the coolant-out thermocouple and provide a coolant return from the turbocharger (Fig. A6.2), use a coolant outlet purchased from OH Technologies[7,8] in place of the stock thermostat housing.

7.4.8 *Oil Filter Housing*—Modify the oil-filter housing to accept a thermocouple on the front side of the housing, facilitating measurement of the oil temperature entering the oil cooler.

7.5 *Special Engine Measurement and Assembly Equipment*—For assembly, use any special tools or equipment shown in the 2012 Explorer Service Manual. Complete any assembly instructions not detailed in Section 7 according to the instructions in the 2012 Explorer Service Manual. Apparatus routinely used in a laboratory or workshop are not included.

7.5.1 *Piston Ring Positioner*—Use the piston-ring positioner to locate the piston rings down from the cylinder-block deck surface by 38 mm. This allows the compression rings to be positioned in a consistent location in the cylinder bore for the ring-gap measurement. Fabricate the positioner according to the details shown in Fig. A6.13.

7.5.2 *Engine Service Tools*—A list of special tools[17] for the test engine is shown in Table A7.8. The tools are designed to aid carrying out several service items, in addition to the specific service items that require special tools to perform the functions indicated (if not self-explanatory).

7.6 *Engine Installation on the Test Stand:*

7.6.1 *General*—Functions that are to be performed in a specific manner or at a specific time in the assembly process are noted here.

7.6.2 *Mounting the Engine on the Test Stand*—Mount the engine on the test stand so that the flywheel friction face is 0.0° ± 0.5° from vertical and at a 0.0° ± 0.5° roll angle. Use two motor mounts at the rear of the engine. Quicksilver P/N 66284-A[7,18] has been found suitable for this purpose. An example of a rear-mount support is shown in Fig. A6.5. Use a rubber mount at the front of the engine attached to the front-cover mount. Examples of front-mount supports are shown in Fig. A6.4. Ensure that the engine's longitudinal axis is aligned to within 0.5° of the dynamometer.

7.6.3 *Flywheel*—Obtain the modified flywheel (P/N OHTVH-006-1) from OH Technologies.[7,8] Lightly coat the flywheel bolts with Loctite 565 to prevent any oil from seeping out of the holes. Torque the flywheel to 108 N·m to 115 N·m.

7.6.4 *Clutch and Pressure Plate*—Utilize the clutch disc (4-spring, Sachs P/N K0047-07[19] or ACT P/N 30000207[20]), and the pressure plate, Sachs P/N K0047-07.[19] Torque the pressure plate bolts to 25 N·m to 33 N·m. Replace the clutch and pressure plate with every new engine.

7.6.5 *Driveline*—Grease the driveline every test. The driveline specifications are as follows:

(1) Driveline angle degree: 1.5° ± 0.5°;

(2) Installed length from flange to flange: 450 mm to 610 mm;

(3) 1410 series flanges; 1550 joints;

(4) Driveshaft stiffness: 0.1° to 0.3°/136 N·m (100 ft·lbf). P/N MSI-41/55S-22 from Machine Services Inc. (see X1.5.2.3) has been found to be a suitable driveshaft.

7.7 *Exhaust System:*

7.7.1 **Warning—**Exhaust gas is noxious. (Caution: Any leaks in the connections to the sample probes will result in erroneous readings and incorrect air-fuel ratio adjustment.)

7.7.2 A typical exhaust system, with fittings for backpressure probe, oxygen (O_2) sensors and thermocouple, is illustrated in Fig. A6.6.

7.7.3 Construct exhaust components from either solid or bellows pipe/tubing. Other flexible pipe type is not acceptable.

7.7.4 Use the backpressure probes until they become unserviceable. If the existing probes are not cracked, brittle, or deformed, clean the outer surfaces and clear all port holes. Check the probes for possible internal obstructions and reinstall the probes in the exhaust pipe.

7.7.4.1 Stainless steel probes are generally serviceable for several tests; mild steel probes tend to become brittle after one test.

7.8 *Fuel Management System:*

[16] Test Engineering Inc., 12758 Cimmaron Path, Ste. 102, San Antonio, TX 78249-3417.

[17] Available from any Ford dealership or from Owatonna Tools Co., 2013 4th St., NW Owatonna, MN 55060.

[18] The sole source of supply of this bracket known to the committee at this time is Quicksilver, www.quicksilver-products.com.

[19] Available from online and local parts suppliers, contact Sachs website www.sachsperformance.com.

[20] Available from online and local parts suppliers, contact Advance Clutch Technology website www.advancedclutch.com.

AVA Documents
Document Sharing Hub

Full document details: ASTM D8291-24a

7.8.1 *Fuel Injectors*—Inspect the O-rings to ensure they are in good condition and will not allow fuel leaks. Replace if necessary. Install the fuel injectors into the fuel rail and the cylinder head.

7.9 *Powertrain Control Module:*

7.9.1 Use a Powertrain Control Module (PCM) provided by Ford Motor Company[6,7] to run this test. The PCM contains a calibration developed for this test. The PCM calibration number is U502-HBBJ0-v1-7-VEP-371.VBF.

7.9.1.1 The PCM is powered either by a 13.5 V ± 1.5 V battery or an alternative power supply that does not interrupt/interfere with proper PCM operation.

7.9.1.2 Connect the PCM battery/power supply to the engine wire harness with an appropriate gauge wire of the shortest practical length so as to maintain a dc voltage of 12 V to 15 V and minimize PCM electrical noise problems. Ground the PCM ground wire to the engine. From the same ground point, run a minimum 2 gauge wire back to the battery negative to prevent interruption/interference of the PCM operation. The power supply can also be used for the lambda (oxygen) sensors.

7.10 *Spark Plugs:*

7.10.1 Use either Motorcraft CYFS-12-Y2[10] or Bosch (P/N HR7Mii30T[22]) spark plugs which come pre-gapped. Torque the spark plugs to 9 N·m to 12 N·m. Do not use anti-seize compounds on spark plug threads. Motorcraft CYFS-12Y-PCT and CYFS-12Y-PCTX may also be used in this application.

7.11 *Crankcase-Ventilation System:*

7.11.1 The crankcase-ventilation system is vented to the atmosphere through the port in the valve cover and is not to be connected to the inlet.

7.12 *Water-to-Air Turbocharger Intercooler:*

7.12.1 Use water-to-air intercooler capable of achieving the required air-charge temperatures in Tables 1-4 and an average, system-pressure loss less than 3 kPa. Type 5 or Type 52 intercoolers from Frozenboost[7,23] have been found suitable.

When cleaning the intercooler as part of normal maintenance, spray clean the air side of the intercooler with solvent, rinse with hot water and leave to air-dry. Use commercial AquaSafe descaler to clean the water-side.

7.13 *Intercooler Tubing:*

[22] Available from retailers and autopart stores.

[23] FrozenBoost Inc., www.frozenboost.com.

TABLE 2 Sequence IX Controlled Quantities for the Eight-Hour Break-in

Quantity, unit	Controlled value
Coolant-out temperature, °C	85
Oil-gallery temperature, °C	100
Inlet-air pressure, kPa (gauge)	0.05
Air-charge temperature, °C	37
Inlet-air temperature, °C	30
Humidity, g/kg	11.4
Fuel pressure, kPa	450 ± 37
Coolant flow rate	Valve wide open

TABLE 3 Instrumentation Calibration Periods

Instrument Type	Section	Calibration Period
Load cell	8.19	Prior to every reference test
Thermocouples	8.11	Every 3 mo
Pressure sensors	8.12	Every 3 mo
Flow meters	8.13	Every 3 mo
In-cylinder pressure sensors	8.16	Every 300 h
Crank angle encoder	8.17	Every 300 h
Charge amplifier	8.18	Manufacturer's recommendation

TABLE 4 Oil-Flush Procedure

Step	Time per Stage, h:min	Total Time, h:min	Ramp Time, h:min	Engine Speed, r/min	Engine Torque, N·m
1	0:02	0:02	-	Idle	0
2	0:15	0:17	0:02	2000	70
3	0:02	0:19	0:02	Ramp to idle	0

7.13.1 Fabricate the inlet-air system with 51 mm internal diameter (ID), stainless steel tubing from the turbocharger to the intercooler, and 64 mm ID, stainless steel tubing from the intercooler to the throttle body. The tubing length is not specified but should be the appropriate length to achieve the required air-charge temperature in Table 1 and Table 2 and an average system pressure loss less than 3 kPa.

7.13.1.1 Locate the sensors for measuring the Manifold Absolute Pressure and Temperature (MAPT) in accordance with Fig. A6.9. Place the probes for measuring the post-intercooler, turboboost pressure, and pre-intercooler pressures, in accordance with Fig. A6.9. A typical installation is shown in Fig. A6.10. The engine vacuum system is shown in Fig. A6.15.

7.14 *External Hose Replacement:*

7.14.1 Inspect all external hoses used on the test stand and replace any hoses that have become unserviceable. Check for internal wall separations that could cause flow restrictions. Check all connections to ensure security.

7.15 *Wiring Harness:*

7.15.1 There are two wiring harnesses used on the test stand—a dynamometer harness that connects to the stand power and PCM, and an engine harness. Obtain the dynamometer and engine-wiring harnesses from OH Technolgies.[7,8] Diagrams of these wiring harnesses are shown in Fig. A6.16 and Fig. A6.17 identifying connections.

7.16 *Electronic Throttle Controller:*

7.16.1 Control the electronic-throttle controller using signals from the simulated, accelerator-pedal position. The dynamometer wiring harness is supplied with an Accelerator Pedal Position jumper cable with un-terminated pigtail leads.

7.16.1.1 Connect the two voltage command signals, Acc Pos Sensor 1 and Acc Pos Sensor 2, to the Accelerator Pedal Position jumper cable. The voltage control ranges for each signal are shown in Table 5. The wiring schematic and pin-out description for this connection are shown in Fig. 2.

7.16.1.2 Acc Pos Sensor 2 shall always equal 50 % of Acc Pos Sensor 1.

7.16.1.3 Run the voltage signals through a voltage isolator otherwise interference will occur between the laboratory

AVA Documents
Document Sharing Hub

Full document details: ASTM D8291-24a

TABLE 5 Accelerator Position Sensor Control Ranges

Command Signal	Operating Range, V[A]	Min Signal (Idle), V[A]	Max Signal (WOT), V[A]
Acc Pos Sensor 1	0 to 5.0	0.75 (15 %)	4.25 (85 %)
Acc Pos Sensor 2	0 to V	0.375 (15 %)	2.125 (85 %)

[A] DC.

digital-to-analog converter (DAC) system and the engine electronic control unit (ECU) leading to erratic throttle control.

7.17 *Water Pump and Water-Pump Drive*—Install the water pump and pulley, the crankshaft pulley, and the tensioner according to the 2012 Explorer service manual. These are the only components needed to drive the water pump. All other production, front-end, accessory-drive components do not need to be installed. The engine cannot be used to drive any external engine accessory other than the water pump. Pull back the tensioner and install the water-pump drive belt as shown in Fig. 3. It is recommended that there is a minimum contact angle of 20° between the drive belt and the water-pump pulley.

7.18 *Cylinder-block Oil Separator:*

7.18.1 Install a dummy positive crankcase ventilation (PCV) valve (that is, a PCV valve with the internal components removed) in the oil separator on the side of the engine block. Measure crankcase pressure at this location.

8. Engine Preparation

8.1 *Environment for Engine Buildup and Measurement Areas*—The ambient atmosphere of the engine buildup and measurement areas shall be reasonably free of contaminants. Control the temperature to within ±3 °C to ensure acceptable repeatability in the measurement of parts dimensions. To prevent moisture forming on cold engine parts that are brought into the buildup or measurement areas, maintain the relative humidity at a nominal maximum of 50 %.

8.2 *Engine Disassembly:*

8.2.1 Disassemble the engine and the cylinder head according to the 2.0 L Ecoboost disassembly procedures in the Ford 2012 Explorer Shop Manual. Note the position of all the engine components to ensure they are returned to the same positions when the engine is reassembled.

8.3 *Cleaning Engine Components:*

8.3.1 *Cylinder Head Preparation and Cleaning:*

8.3.1.1 *General*—Use a modified cylinder head obtained from TEI.[7,16]

8.3.1.2 *New Cylinder Heads*—A new cylinder head that has been modified with pressure-transducer tubes installed, and never used in a previous Sequence IX test, shall be cleaned with Stoddard solvent before assembly. Clean all debris left from the tube installation off the cylinder head.

8.3.1.3 *Used Cylinder Heads*—For a cylinder head that has been modified with pressure transducer tubes installed, and has been used in a previous Sequence IX test, clean the bare cylinder head, with tubes (but no valve-train components) in an ultrasonic parts cleaner. Tierra Tech Model MOT500NS[7,24] has been found suitable for this purpose. Rinse parts with cleaning soap, NAT-50 or PDN-50,[7,25] before putting them into the ultrasonic cleaner. Use Ultrasonic Solution 7 and B[7,24] in the ultrasonic parts cleaner.

8.3.1.4 *The Cleaning Procedure:*

(1) Heat the ultrasonic bath to 60 °C (140 °F). When this temperature is attained (but NOT before), add the ultrasonic cleaning solution. For the Tierra Tech Model MOT500NS with a capacity of 6000 L (158 gal), use 20.8 L of ultrasonic solution 7 and 1.9 L (0.5 gal) of ultrasonic solution B. Change the soap and water solution at least after every 25 h of use.

NOTE 2—Quantities will be different for a different size unit.

(2) After 30 min, remove the parts and immediately spray with hot water, followed by solvent and left to air dry.

8.3.2 *Cleaning Other Components*—Unless otherwise stated, spray clean the following components with solvent, then blow out with pressurized air, and leave to air dry:

(1) camshafts and all valve train;

(2) intake manifold/throttle body (unseparated);

(3) fuel-pump housing with piston;

(4) vacuum pump and oil screen;

(5) oil screen and the intake and outlet of the turbocharger: wipe lightly, with a rag wet with solvent. (Do not clean the inside of the turbocharger);

(6) carbon build up on the injectors: wipe off; variable valve timing;

(7) variable valve timing (VCT) solenoids;

(8) valve cover;

(9) turbocharger oil lines.

8.4 *Engine Measurements:*

8.4.1 *Cylinder-Bore and Piston Measurements*—See Table A8.1.

8.4.1.1 Measure and record the piston-to-bore clearances at the top-, second-, and third-ring lands and the piston skirt as shown in Fig. A6.13. Use the bore ladder shown in Fig. A6.14 to determine bore diameter positions. Measure the bore in both the longitudinal and transverse directions. To determine the piston-to-bore clearance, calculate the difference between the particular piston diameter location and the average bore diameter for both the transverse and longitudinal directions.

8.4.1.2 Measure and record ring side clearances for the upper and lower compression rings (UCR, LCR). Determine ring side clearance by taking four measurements 90° apart. Either check clearance with a thickness gauge or by measuring the difference between the thickness of the ring and the height of the corresponding groove.

8.4.1.3 Measure and record ring tension. Obtain ring tension measurements from Test Engineering, Inc.[7,16]

8.4.2 *Cylinder-head Measurements*—See Table A8.2.

[24] The sole source of supply of this product known to the committee at this time is TierraTech, Draper Business Park, 12227 South Business Park Drive, Suite 100, Draper, UT 84020, sales@tierratech.com.

[25] The sole source of supply of this material known to the committee at this time is Better Engineering Manufacturing, 8361 Town Court, Baltimore, MD 21236.

AVA Documents
Document Sharing Hub

Full document details: ASTM D8291-24a

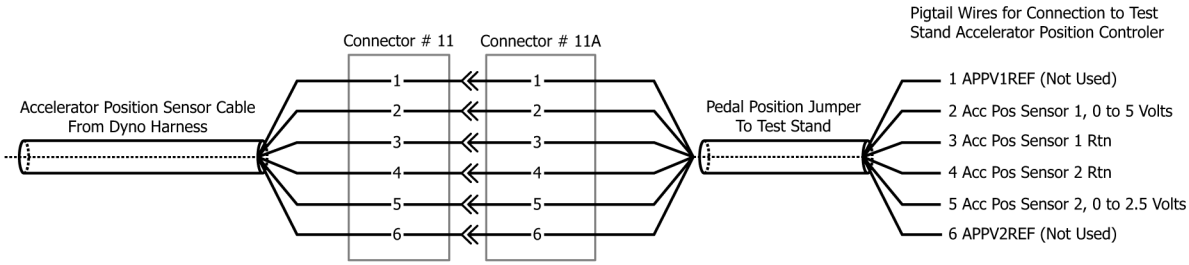

FIG. 2 Accelerator Position Wiring Schematic

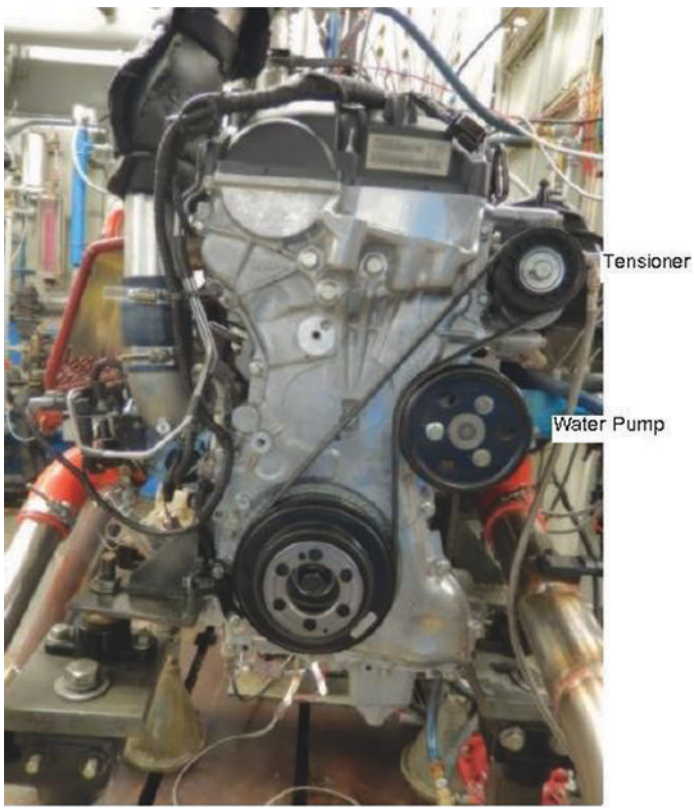

FIG. 3 Water-Pump Drive Arrangement

8.4.2.1 To determine the valve stem-to-guide clearance, measure the diameter of the valve stem at 38 mm from the tip of the valve, and the valve guide at 19.5 mm from the top of the valve guide.

8.4.2.2 For the intake- and exhaust-valve springs, measure and record the spring free length and spring tension at a compressed height of 28.7 mm. Verify the compressed spring tension is 460 N ± 21 N. Reject any springs not meeting this criteria.

8.5 *Miscellaneous Engine-Components Preparation:*

8.5.1 *Environment for Engine Buildup and Measurement Areas*—The ambient atmosphere of the engine buildup and measurement areas shall be reasonably free of contaminants. Control the temperature to within ±3 °C to ensure acceptable repeatability in the measurement of parts dimensions. To prevent moisture forming on cold engine parts that are brought into the buildup or measurement areas, maintain the relative humidity at a nominal maximum of 50 %.

8.5.2 *Throttle Body:*

8.5.2.1 Clean the butterfly and bore of the throttle body with Berryman Chemtool B12[7,26] carburetor cleaner and air-dry before each test. Do not disassemble the throttle body as this will cause excessive wear on the components. The idle air screw can be removed for the cleaning process. Fully close the idle air screw during test operation.

8.5.2.2 There is no specific life for the throttle body. However, the clearance between the bore and the butterfly will eventually increase and render the body unserviceable. When the clearance becomes too great to allow control of speed, torque, and air-fuel ratio, discard the throttle body.

8.6 *Engine Assembly:*

8.6.1 Assemble the engine according to the 2.0 L Ecoboost assembly procedures in the 2012 Explorer Shop Manual, except as noted in Section 7. Ensure all components (that is, pistons, rings, bearings, etc.) are replaced in the same positions used originally when assembled at the factory.

8.6.2 *Sealing Compounds*—Use a silicon-based sealer, as needed, on the contact surfaces between the rear-seal housing and oil pan and the front cover and cylinder block, cylinder head and oil pan. Use Motorcraft Gasket Maker (TA-16)[7,10] or equivalent between the sixth intake and exhaust camshaft cap and the cylinder head. Use silicon-based sealer sparingly since it can elevate the indicated silicon content of the used oil.

NOTE 3—Non-silicon liquid or tape thread sealers may be used on bolts and plugs.

8.6.3 *Gaskets and Seals*—Install new gaskets and seals during engine assembly.

8.7 *Cylinder Head Assembly:*

8.7.1 Cylinder heads may be used as long as they remain within service specifications. Refer to the 2012 Explorer Service Manual.

8.7.2 Replace the valves on cylinder heads reused on another engine block.

8.7.3 If a cylinder head is removed from an engine block ahead of schedule due to broken pistons, short-block failure, or lack of test severity, the laboratory may reuse the cylinder head without replacing the valves provided they are within service limit.

8.7.4 Assemble the cylinder heads in accordance with the service manual. Lap the valves before installation and install

[26] The sole source of supply of this product known to the committee at this time is Berryman Products, Inc, 3800 E. Randol Mill Rd, Arlington, TX 76011. Tel: +1 800 433 1704; www.berrymanproducts.com.

AVA Documents
Document Sharing Hub

Full document details: ASTM D8291-24a

new intake- and exhaust-valve seals. Set the valve lash in accordance with the procedure in the workshop manual and record the valve lash.

8.7.5 Vacuum check the valve ports before use.

8.8 *Engine Installation on Test Stand*—Install the engine onto the stand as described in 7.6.2. Install all engine components external to the long block according to the 2.0 L Ecoboost assembly procedures in the 2012 Explorer Shop Manual, where applicable. Connect the engine to all external laboratory systems identified in Section 6, in accordance with laboratory procedures.

8.9 *Pressure-Sensor Installation*—Once the sensor tubes and modified valve cover are installed (see 7.4.4 and 7.4.5), install pressure sensors into the pressure-sensor tube using the AVL type TT21 sensor-installation mounting tool (P/N TIWG0214A.01). Torque the sensors to 1.5 N·m.

8.10 *New-Engine Break In*—Once a new engine has been installed on the test stand, perform the eight-hour break-in procedure shown in Table 6 using oil TMC 220.[27] Once the break-in is complete, run four standard LSPI iterations using Reference Oil 220. Refer to 11.3 and 11.3.1.

8.10.1 The controlled quantities during the break-in are listed in Table 2. All other controls are left wide open or free flowing. The engine does not produce enough heat in the early steps to reach all target temperatures. All controlled quantities shall be on target at the beginning of Step 4.

8.11 *Temperature Measurements:*

8.11.1 *General:*

8.11.1.1 Temperature measurement locations are specified in 8.11.4.

8.11.1.2 Use thermocouples that can be calibrated with an accuracy of ±0.5 °C. Use Ford-specified temperature sensors for Electronic Engine Control (EEC) inputs.

8.11.2 *Equipment:*

8.11.2.1 Use premium, sheathed thermocouples in all cases except the intake-air thermocouple which may be an open-tip type. Use thermocouples with a diameter of 3 mm. Locate all thermocouples in the center of the stream.

8.11.2.2 Thermocouples, wires, and extension wires shall be matched to perform in accordance with the special limits of error as defined in ANSI MC96.1.

8.11.3 *Calibration*—Refer to Table 3 for calibration interval of thermocouples. The temperature-measurement system shall indicate within ±0.5 °C of the laboratory calibration standard. The calibration standard shall be traceable to NIST.[28]

8.11.4 *Locations for Engine-Temperature Sensors:*

8.11.4.1 *Engine-Coolant Inlet*—Install the sensor in the coolant inlet on the engine (P/N OHTVH-008-1[7,8]) perpendicular to the run. Install sensor with the tip in the center of the stream of flow (see Fig. A6.2).

8.11.4.2 *Engine-Coolant Outlet*—Install the sensor in the coolant outlet on the engine (P/N OHTVH-009-1[7,8]) perpendicular to the run. Install sensor with the tip in the center of the stream of flow (see Fig. A6.2).

8.11.4.3 *Engine-Oil Gallery*—Install the tip of the sensor at the center of the flow stream in the external, oil-filter adapter (see Fig. A6.12) through the hole for the oil-pressure switch (which is not used). Install a tee to accept this temperature sensor and attach the oil-pressure line.

8.11.4.4 *Engine-Oil-Filter In*—Install the tip of the sensor at the center of the cross fitting attached to the side opposite from the engine-oil-inlet temperature sensor on the oil-filter adapter. Modify the adapter with a ⅛ in. NPT hole to access the oil passage (see Fig. A6.12).

8.11.4.5 *Inlet Air*—Install the tip of the thermocouple midstream in the air-cleaner box downstream of the filter (see Fig. A6.8). Insertion depth shall be 37 mm ± 2 mm.

8.11.4.6 *Fuel*—Install the sensor in the low-pressure fuel line no more than 155 mm from the high-pressure pump. Use

[27] Available from the ASTM Test Monitoring Center, 203 Armstrong Drive, Freeport, PA 16229, Attention: Director.

[28] National Institute of Standards and Technology, 100 Bureau Drive, Stop 2300, Gaithersburg, MD 20899-2300. Email: calibrations@nist.gov. Phone: +1 301 975 2200.

TABLE 6 Sequence IX Eight-Hour, Break-In Procedure

Step	Engine Speed, r/min	Engine Torque, N·m	Time per Stage, h:min	Total Time, h:min
Install new oil filter and charge engine with 4.2 kg of new oil				
1	1000[A]	0	0:30	0:30
Oil change 1: Shut engine down, drain used oil, and remove oil filter. Allow oil to drain for 20 min. Install new oil filter and add 4.2 kg of new oil. Start engine and idle for 5 min				
2	1500	38	0:30	1:00
3	2000	72	0:30	1:30
4	2500	111	0:30	2:00
5	3000	135	0:30	2:30
6	3000	150	3:15	5:45
7	2000	72	0:15	6:00
8	3250	155	0:15	6:15
9	3500	155	0:15	6:30
10	3750	155	0:15	6:45
11	4000	155	1:15	8:00
Bring engine to idle speed for 5 min, then shut down				
Oil change 2: Drain used oil and remove oil filter. Allow oil to drain for 20 min. Install new oil filter and add 4.2 kg new oil.				

[A] Idle speed.

AVA Documents
Document Sharing Hub

Full document details: ASTM D8291-24a

an appropriate size "T" fitting to ensure the sensor and fitting do not interfere with the fuel flow (see Fig. A6.7).

8.11.4.7 *Air Charge*—Install the sensor in the intercooler outlet tube 25 mm ± 2 mm downstream from the MAPT sensor (see Fig. A6.9).

8.11.4.8 *Exhaust*—Install a sensor 140 mm ± 12 mm downstream on the exhaust flange (see Fig. A6.6).

8.11.4.9 *Oil Sump*—Measurement of oil-sump temperature is optional.

8.12 *Pressure Measurements:*

8.12.1 *General*—Pressure measurement locations are specified in 8.12.4.

8.12.2 *Equipment*—The accuracy and resolution of the pressure-measurement sensors and the complete pressure-measurement system shall meet the requirements of the Data Acquisition and Control Automation II (DACA-II) Task Force Report.[27] Replace pressure sensors that are part of the EEC system with Ford-specified equipment.

NOTE 4—Tubing between the pressure-tap locations and the final pressure sensors should incorporate condensate traps, as indicated by good engineering practice. This is particularly important in applications where low air pressures are transmitted by means of lines which pass through low-lying trenches between the test stand and the instrument console.

8.12.3 *Calibration*—Refer to Table 3 for calibration interval for pressure sensors. Pressure-measurement systems shall conform to the guidelines in DACA-II Task Force Report.[27] The calibration standard shall be traceable to NIST.[28]

8.12.4 *Locations for Pressure-Measurement Sensors:*

8.12.4.1 *Intake Manifold*—Measure intake-manifold pressure (MAP) at the port downstream of the throttle body on the intake manifold (see Fig. A6.9).

8.12.4.2 *Engine-Oil Gallery*—Measure oil-pump pressure in the external oil-filter adapter (see Fig. A6.11) through the hole for the oil-pressure switch (not used). Install a tee to accept the temperature sensor and attach the oil-pressure line.

8.12.4.3 *Coolant Pressure*—Measure engine-coolant-out pressure at the top of the coolant reservoir as shown in Fig. A6.18.

8.12.4.4 *Fuel*—Measure fuel pressure in the lower pressure fuel line at the exit of the stand fuel pump.

8.12.4.5 *Crankcase*—Measure crankcase pressure at the dummy positive crankcase ventilation (PCV) valve in the cylinder-block oil separator.

8.12.4.6 *Exhaust Back-Pressure*—Measure the exhaust back-pressure with the exhaust-gas sampling probe located 76 mm ± 12 mm downstream of the exhaust flange (see Fig. A6.6). A sensor capable of absolute or gauge measurement corrected with barometric pressure reading is recommended. Install a condensate trap between the probe and sensor to accumulate water present in the exhaust gas.

8.12.4.7 *Inlet Air*—Measure inlet-air pressure in the air-cleaner box downstream of the air filter (see Fig. A6.8).

8.12.4.8 *Pre-Intercooler*—Measure the pre-intercooler pressure with the sampling probe located 155 mm ± 50 mm downstream of the turbocharger flange (see Fig. A6.9).

8.12.4.9 *Boost Pressure (Post-Intercooler)*—Measure the boost pressure with the sampling probe located downstream of the intercooler and at least 305 mm upstream of the MAPT sensor (see Fig. A6.9).

8.12.4.10 *Cylinder Head Oil*—Measure cylinder-head oil pressure at the oil-gallery plug on the left side of the cylinder head next to the belt tensioner (see Fig. A6.19).

8.13 *Flow-Rate Measurements:*

8.13.1 *General*—With the exception of engine coolant, equipment for measuring the flow rate for the four required quantities is not specified. This provides opportunity for adaptation of existing test-stand instrumentation (see X1.4.5 for suitable mass-flow meters).

8.13.2 *Engine Coolant*—Determine coolant flow rate using a flowmeter with an accuracy of ±1 % (see Fig. A6.3). A suitable flowmeter is available from Micromotion (Emerson),[7,29] model number R200SA418NCAMEZZZZ. Take precautions to prevent air pockets from forming in the lines to the flow meter. Transparent lines or bleed lines, or both, are beneficial in this application. Ensure that the manufacturer's requirement for orientation and straight sections of pipe are installed immediately up- and down-stream of the flowmeter.

8.13.3 *Calibration*—Refer to Table 3 for the calibration interval of flow-rate measurements. Calibrate the engine-coolant flowmeters at 55 L/min and 95 °C coolant-outlet temperature.

8.13.4 *Locations for Flow-Rate Measurements:*

8.13.4.1 *Engine Coolant*—Install the flowmeter at either the coolant inlet or outlet sides of the engine.

8.13.4.2 *Fuel*—Measure fuel flow rate in kg/h on the low-pressure, fuel system before the high-pressure, engine-fuel pump.

8.14 *Humidity Measurement*—Condition the intake air to 11.4 g/kg ± 0.8 g/kg humidity. The test stand intake-air duct system is not specified.

8.15 *O2 Sensor Calibration*—Use the manufacturer's calibration requirements for the O2 sensor.

8.16 *In-cylinder Pressure Measurement*—Use the manufacturer's calibration requirements for the in-cylinder pressure sensors. Refer to Table 3 for the calibration interval.

8.17 *Crank-angle Measurement*—Use the manufacturer's calibration requirements for the crankangle encoder. Refer to Table 3 for the calibration interval.

8.18 *Charge Amplifier*—Use the manufacturer's calibration requirements for the charge amplifier. Refer to Table 3 for the calibration interval.

8.19 *Load Cell*—Calibrate the load cell before every reference test.

9. Reagents and Materials

9.1 *Solvents and Cleaners Required*—No substitutions are allowed. (**Warning—**Use adequate safety provisions with all solvents and cleaners.)

[29] Emerson Automotive Solutions, Micro Motion Corp., 7070 Winchester Circle, Boulder, CO 80301. www3.emersonprocess.com.

AVA Documents
Document Sharing Hub

Full document details: ASTM D8291-24a

9.1.1 *Solvent*—Use only mineral spirits (for example, Stoddard Solvent) meeting the requirements of Specification D235, Type II, Class C for volume fraction of aromatics 0 % to 2 %, flash point 61 °C minimum, and color not darker than +25 on Saybolt Scale or 25 on Pt-Co Scale. (**Warning—**Combustible. Health hazard.) Obtain a Certificate of Analysis for each batch of solvent from the supplier.

9.1.2 *Organic Solvent*—Use Penmul L460.[7,30] (**Warning—**Combustible. Health hazard.)

9.1.3 *Ultrasonic Cleaner*—Use Tierratech ultrasonic solution 7 and B.[7,24]

9.1.4 *Carburetor Cleaner*—Use Berryman Chemtool B12.[7,26]

9.2 *Test Fuel*—Approximately 340 L of Haltermann HF2021 EPA Tier 3 EEE Emission Certificate test fuel[7,13] are required for each test. (**Warning—**Flammable, health hazard.)

9.3 *Sealing Compound*—Loctite[31] 565.[7,32]

9.4 *Parts Cleaning Soap*—NAT-50 or PDN-50 are acceptable.[7,25] (**Warning—**Health hazard.)

10. Calibration and Standardization

10.1 *General:*

10.1.1 Annex A2 describes calibration procedures using the TMC reference oils, including their storage and conditions of use, the conducting of tests, and the reporting of results. Determine the acceptability of a reference oil according to the Lubricant Test Monitoring System (LTMS).

10.1.2 Annex A3 describes general maintenance activities involving TMC reference oils, including special reference oil tests, special use of the reference oil calibration system, donated reference oil test programs, introducing new reference oils, and TMC information letters and memoranda.

10.1.3 Annex A4 provides general information regarding new laboratories, the role of the TMC regarding precision data, and the calibration of test stands used for non-standard tests.

10.2 *Activities Specific to the Sequence IX:*

10.2.1 Verify the calibration of test stands with reference oils supplied by the TMC (see 10.2.2). Consult Annex A2 prior to attempting calibration of a new stand. Stand calibration tests are normally conducted upon expiration of either the 90 d calibration time period, after completing five non-reference oil tests, or 150 engine hours at the start of the test. Calibration time periods may, however, be adjusted by the TMC. Any non-reference oil test started within 90 d of the previous calibration test and with less than 150 engine hours at the start of test is considered within the calibration period, provided the five allowed non-reference oil tests that have been completed since the previous calibration test in the stand are not exceeded.

10.2.2 The TMC provides a reference oil sample of 22.4 L for each stand calibration test.

10.3 *Unacceptable Calibration Results:*

10.3.1 It is recognized that a certain percentage of calibration tests fall outside the acceptance limits because of the application of statistics in the development of the acceptance limits. Failure of a reference oil test to meet e_i (prediction error) or Z_i (exponentially weighted moving average) control chart limits[33] can be indicative of a false alarm or a stand, laboratory, or industry problem. When this occurs, the laboratory, in conjunction with the TMC, shall attempt to determine the problem source. The TMC may solicit input from industry expertise (other testing laboratories, the test sponsor, ASTM Technical Guidance Committee, Sequence IX Surveillance Panel, and so on) to help determine the cause and extent of a problem. The Sequence IX Surveillance Panel adjudicates industry problems.

10.3.2 If the TMC determines the problem is a false alarm and is stand-related, there is no impact on other non-reference tests running in other stands within the laboratory. If the TMC determines the problem is laboratory-related, non-reference tests run during the problem period shall be considered invalid, unless there is specific evidence to the contrary for each individual test.

10.3.3 The TMC reschedules a calibration test once it is satisfied that no particular problem exists or the problem has been resolved. The laboratory shall provide adequate documentation to support conclusions reached during this process. Attach this documentation to the acceptable calibration test report. It shall provide sufficient information to show how the problem related to other tests operated during the same period.

10.4 *Test Stand Modifications*—A nonstandard test includes any test completed under a modified procedure requiring hardware or controller modifications to the test stand. The TMC determines whether another calibration test is necessary after the modifications have been completed.

10.4.1 Removal of an engine terminates the stand calibration. Upon re-installation of the engine, reestablish calibration in accordance with LTMS guidelines. Ensure that instrumentation calibration requirements are met when re-establishing calibration status.

10.5 *Test Numbering System:*

10.5.1 *Acceptable Tests*—The test number shall follow the format *AAA-BB-CCCC-DDD* where *AAA* represents the test stand number, *BB* represents the number of Sequence IX tests on the stand, *CCCC* represents the engine number, and *DDD* represents the number of tests on the engine. As an example, 6-10232-5 represents the 102nd test on Stand 6 and the 5th test on engine number 32. Consecutively number all tests on a given stand and engine.

10.5.2 *Unacceptable or Aborted Tests*—If a calibration test is aborted or the results are outside the acceptance limits, the *DDD* portion of the test number for subsequent calibration test(s) shall include a letter suffix. The completion of any amount of operational time on tests will cause the test number to increase by one.

10.5.3 Re-reference the engines once removed from the test stand and re-installed, even if the test number and time criteria

[30] The sole source of supply of this product known to the committee at this time is Penetone Corporation, PO Box 22006, Los Angeles, CA 90022.

[31] Loctite is a registered trademark of Henkel Corporation.

[32] Available from Henkel Corporation, One Henkel Way, Rocky Hill, CT 06067, USA. www henkelna.com.

[33] See LTMS document available from TMC at https://www.astmtmc.org/ftp/docs/ltms/ltms.pdf

AVA Documents
Document Sharing Hub
Full document details: ASTM D8291-24a

are met by the engine. Laboratories shall inform the TMC with a written explanation when a test engine is removed from a test stand and installed onto another test stand. Calibrate engines moved from one stand into another test stand as a new stand/engine.

11. Test Procedure

11.1 *Oil-Flush Procedure*—For each new test, use the test oil to perform two oil flushes as follows:

11.1.1 Install a new oil filter, charge engine with 4.2 kg of new oil, and carry out the steps shown in Table 4.

11.1.2 Repeat 11.1.1.

11.1.3 During the whole of the oil-flush procedure, control to the conditions shown in Table 1.

11.2 *Oil-Conditioning Procedure:*

11.2.1 *General*—Prior to initiating the test cycle, condition the test oil as described in this section.

11.2.2 Install a new oil filter, charge engine with 4.2 kg of new oil, and carry out the steps shown in Table 7.

11.2.3 At the end of Step 5, shut-down the engine for a minimum of 10 min.

11.2.4 Take oil dip and inspect the engine and the test stand for oil leaks and any obvious damage. If the level on the stock dipstick is at the minimum level or below, investigate the cause and rectify.

11.2.5 During the whole of the oil-conditioning procedure, control to the conditions shown in Table 8.

11.3 *Test Cycle*—For one complete test, carry out the test cycle shown in Table 9 until four valid iterations have been recorded four times (see 11.3.4). Each cycle is referred to as one iteration, the four cycles being denoted as iterations A, B, C, and D.

11.3.1 Record in Step 4 the combustion analysis data using AVL IndiCom for 175 000 combustion cycles (see Annex A10 for combustion analysis settings).

11.3.2 During the idle Step 6 take oil sample as follows:

11.3.2.1 Take a 150 mL purge sample followed by a 30 mL sample.

11.3.2.2 Retain the 30 mL oil sample for analysis.

11.3.2.3 Shut-down the engine and return the 150 mL purge sample.

11.3.2.4 Leave engine down for a minimum of 10 min.

11.3.2.5 Take oil dip and inspect engine and stand for oil leaks and any obvious damage.

TABLE 8 Oil-Conditioning Procedure and Test Cycle Conditions

Controlled Quantity, unit	Set Point
Inlet-air temperature, °C	30
Inlet-air pressure, kPa (gauge)	0.05
Exhaust back pressure, kPa (absolute)	104
Humidity, g/kg	11.4
Fuel pressure, kPa	450 ± 37
Coolant Pressure, kPa	70
Fuel temperature, °C	30

11.3.2.6 Oil level should be above the minimum indicator on the dip stick. If the oil is below the minimum indicator, troubleshoot the cause, and document the cause in final test report.

11.3.3 During the whole of the test cycle, control to the conditions shown in Table 8.

11.3.4 Carry out the whole test cycle until four valid iterations have been recorded. If 27 h of test time have been reached before four valid iterations have been obtained, the test is invalid.

11.3.4.1 *Iteration Validity Requirements*—For an iteration to be valid, the following conditions shall be met:

(1) At least 170 000 valid engine cycles per cylinder;

(2) All controlled parameters have a positive final QI.

11.3.5 Record the operational summary for each iteration A through D on Forms 5 to 8 of the Report Forms (see Annex A11). Enter the number of valid cycles, up to 175 000, ran during the iteration. Enter the number of invalid cycles. The number of valid cycles minus the number of invalid cycles shall be greater than or equal to 170 000 for the iteration to be valid. If the number of valid cycles is greater than 170 000, use only the first 170 000 cycles to calculate the number of events for that iteration.

11.4 *End of Test:*

11.4.1 For the end of test maintenance, carry out the steps described in Table 10.

11.4.2 *Engine Shut-down*—At the end of Step 3, shut-down the engine as follows:

11.4.2.1 Turn-off the fuel supply.

11.4.2.2 Turn-off the chilled and process water.

11.4.2.3 Shut-off or remove air intake supply.

11.4.2.4 Once the engine oil temperature is less than 80 °C, drain the oil from the engine for at least 20 min.

TABLE 7 Oil-Conditioning Procedure

Step	Time per stage, h:min	Total time, h:min	Ramp time, min	Engine speed, r/min	Engine torque, N·m	Coolant temp., °C	Oil-gallery temp., °C	Air-charge temp., °C
1[A]	0:02	0:02	—	idle	0	95	95	43
2	0:15	0:17	1[B]	2000	100	95	95	43
3	1:00	1:17	1	1750	269	95	95	43
4	0:15	1:32	1[B]	2000	50	45	45	30
[B]	0:02	1:34	1	idle	0	45	45	30

[A] Targets are not expected to be reached during step.
[B] For coolant and oil-gallery temperatures the ramp times amount to 15 min.

AVA Documents
Document Sharing Hub

Full document details: ASTM D8291-24a

TABLE 9 Test Cycle

Step	Time per stage, h:min	Total time, h:min	Ramp time, min	Engine speed, r/min	Engine torque, N•m	Coolant temp., °C	Oil-gallery temp., °C	Air-charge temp., °C
1	0:02	0:02	—	idle	0	(95)[D]	(95)[D]	(43)[D]
2	0:15	0:17	1[A]	2000	100	95	95	43
3	0:25	0:42	1	1750	269	95	95	43
4[B]	~3:20	4:02	1	1750	269	95	95	43
5	0:15	4:17	1[A]	2000	50	45	45	30
6[C]	0:02	4:19	1	idle	0	45	45	30

[A] For coolant and oil-gallery temperatures the ramp times amount to 15 min.
[B] See 11.3.1.
[C] See 11.3.2.
[D] Values in parentheses are targets but likely unreachable during the step indicated.

TABLE 10 End of Test Maintenance

Step	Time per Stage, h:min	Total Time, h:min	Ramp Time	Engine Speed, r/min	Engine torque, N·m
1	0:02	0:02	—	idle	0
2	Approximately 0:15	0:17	0:02	2000	70
3	0:02	0:19	0:02	idle	0

12. Determination of Test Results

12.1 *Steps for Calculating Low-Speed Preignition (LSPI) Cycles:*

12.1.1 *General:*

12.1.1.1 The AVL combustion analysis equipment and the AVL IndiCom software are used to identify preignition events.

12.1.1.2 The procedure described in this section is intended to be used to evaluate complete test iterations between 170 000 and 175 000 engine cycles. If the test iteration does not contain at least 170 000 engine cycles, the iteration is invalid (see 12.2.2.4).

12.2 *Removal of Invalid Cycles:*

12.2.1 *General*—To determine combustion cycle validity, each cylinder is evaluated separately. Invalid combustion cycles are removed from each cylinder's data set prior to performing the LSPI calculations for peak pressure (denoted by *PP* or *PMAX* – see Note 5) and mass fraction burn at 2 % (*MFP2*).

NOTE 5—The symbols *PP* and *PMAX* are used interchangeably throughout this method to denote the peak pressure. *PMAX* is used by AVL (see A10.16) and *PP* is used in Section 12 and Forms 11 to 15 of the Report Forms (see Annex A11).

NOTE 6—*MFB2* is the engine crankshaft angle, in degrees, measured when 2 % of the mass fraction of fuel has been burned during a combustion cycle.

12.2.2 Use the following criteria to identify invalid cycles:

12.2.2.1 Remove all cycles with a *MFB2* > 30°.

12.2.2.2 Remove all cycles with a *PP* < 2 MPa.

12.2.2.3 After all invalid *MFB2* and *PP* cycles have been removed (see 12.2.2.1 and 12.2.2.2), remove all cycles with a pressure minimum voltage (*PMINV*) differing from the mean of remaining *PMINV* by more than 0.5 V. For example, if the mean *PMINV* of the remaining engine cycles on cylinder 1 is -8.02 V, remove all cycles with *PMINV* < -8.52 V or a *PMINV* > -7.52 V.

12.2.2.4 Once all invalid cycles are removed, proceed to 12.3 using only the first 170 000 valid cycles on any cylinder. If there are fewer than 170 000 valid engine cycles on any one cylinder, the iteration is considered invalid. Record the iteration as invalid and report the number of engine cycles run, along with the total number of invalid engine cycles in the test report.

12.3 *Abnormal PP Cycles*—Remove abnormal *PP* cycles individually for each cylinder as follows:

12.3.1 Remove obvious outliers.

NOTE 7—The mathematical method of estimating quantiles decreases in accuracy the further from normality so obvious outliers should be eliminated prior to proceeding.

12.3.1.1 Remove *PP* > 9 MPa (it is assumed that any cycle with *PP* > 9 MPa is an outlier).

12.3.2 Calculate the following quantities for the remaining results:

12.3.2.1 Mean (*M*).

12.3.2.2 Standard deviation (*S*).

12.3.2.3 Skewness (*G*), defined as:

$$G = \frac{n}{(n-1)(n-2)} \sum_{i=1}^{n} \left(\frac{x_i - \bar{x}}{S} \right)^3 \tag{1}$$

12.3.2.4 Kurtosis (*K*), defined as:

$$K = \left\{ \frac{n(n+1)}{(n-1)(n-2)(n-3)} \sum_{i=1}^{n} \left(\frac{x_i - \bar{x}}{S} \right)^4 \right\} - \frac{3(n-1)^2}{(n-2)(n-3)} \tag{2}$$

12.3.3 Determine the number of standard deviations for the distributions subject to skewness and kurtosis corresponding to the five standard deviations that are appropriate for a valid normal distribution.

12.3.3.1 Simultaneously solve for *B*, *C*, and *D* in Eq 3, Eq 4, and Eq 5 using the values for *G* and *K* determined in 12.3.2.3 and 12.3.2.4, respectively:

$$1 = B^2 + 2C^2 + 6BD + 15D^2 \tag{3}$$

$$G = 8C^3 + 6B^2C + 72BCD + 270CD^2 \tag{4}$$

$$K = 3B^4 + 60B^2C^2 + 60C^4 + 60B^3D + 936BC^2D + 630B^2D^2 + 4500C^2D^2 + 3780BD^3 + 10395D^4 - 3 \tag{5}$$

Of the multiple solution sets possible for *B*, *C*, and *D*, only the set which has monotonically increasingly quantile mapping is acceptable (as Eq 8 shows, *F* increases as *Z* increases). Values of *G* and *K* that satisfy the following two inequalities lead to acceptable solutions:

AVA Documents
Document Sharing Hub

Full document details: ASTM D8291-24a

$$K \geq 1.4207293092995221G^2 + 0.4563229601239591G + -0.2875094732604543 \quad (6)$$

$$K \geq 1.4180657316954324G^2 + -0.4579764479129402G + -0.2886544863701676 \quad (7)$$

12.3.3.2 Then calculate F, an estimate of the quantile corresponding to $Z = 5$:

$$F = -C + BZ + CZ^2 + DZ^3 \quad (8)$$

$$= -C + B(5) + C(5^2) + D(5^3) \quad (9)$$

NOTE 8—F will generally be on the order of 5 to 10 on the first iteration and 5 to 7 on the last iteration.

12.3.4 Omit those cycles with $PP > M + FS$, which are outliers.

12.3.5 If no outliers are found in 12.3.4, the process is complete. If outliers are found in 12.3.4, repeat steps 12.3.3.1 through 12.3.4 until no new outliers are found.

12.3.6 Record the total number of outliers from 12.3.1.1 and 12.3.4.

12.4 *Abnormal MFB2 Cycles*—Remove abnormal *MFB2* cycles individually for each cylinder as follows:

12.4.1 Remove obvious outliers (see Note 7).

12.4.1.1 Remove $MFB2 < 0°$. (It is assumed that any cycle with a $MFB2 < 0°$ is an outlier.)

12.4.2 Calculate M, S, G, and K (see 12.3.2) for the remaining results.

12.4.3 Determine the number of standard deviations for the distributions subject to skewness and kurtosis corresponding to the -5 standard deviations that are appropriate for a valid normal distribution.

12.4.3.1 Simultaneously solve for B, C, and D in Eq 3, Eq 4, and Eq 5 using the values for G and K determined in 12.4.2.

12.4.3.2 Then calculate F, an estimate of the quantile function corresponding to $Z = -5$.

$$F = -C + BZ + CZ^2 + DZ^3 \quad (10)$$

$$= -C + B(-5) + C(-5^2) + D(-5^3) \quad (11)$$

NOTE 9—F will generally be on the order of -4 to -10 on the first iteration and -4 to -7 on the last iteration.

Of the multiple solution sets possible for B, C, and D, only the set which has monotonically increasingly quantile mapping is acceptable (as Eq 10 shows, F increases as Z increases). Values of G and K that satisfy the inequalities in Eq 6 and Eq 7 lead to acceptable solutions.

12.4.4 Omit those cycles with $MFB2 < M + FS$ which are outliers.

12.4.5 If no outliers are found in 12.4.4, the process is complete. If outliers are found in 12.4.4, repeat steps 12.4.3.1 through 12.4.4 until no new outliers are found.

12.4.6 Record the total number of outliers from 12.4.1.1 and 12.4.4.

12.5 *Report LSPI Cycles:*

12.5.1 On Form 11 of the Report Forms (see Annex A11), report the following data for each cylinder for each iteration A through D:

12.5.1.1 Total number of combined LSPI cycles. An LSPI cycle is defined as any combustion event containing both *PP* and *MFB2* outliers.

12.5.1.2 Total number of combustion cycles containing only a *PP* outlier.

12.5.1.3 Total number of combustion cycles containing only a *MFB2* outlier.

12.5.1.4 Number of invalid cycles.

12.6 Record the controlled, monitored and controller area network (*CAN*) bus data listed in Table 11 at a rate of 1/sec. See Annex A9 for data acquisition addresses for the *CAN* bus data.

12.6.1 Report *CAN* bus data for the four iterations A through D (see 11.3), on Forms 9 and 10 of the Report Forms (see Annex A11).

12.7 *Calculation of LSPI Events*—At the end of each 175 000 cycle run, calculate the number of LSPI events as described in this section using the following data from the AVL IndiCom combustion software to determine iteration validity:

(a) PP (see Note 5);

(b) MFB2;

(c) Pressure minimum voltage (*PMINV*).

12.7.1 For each iteration A through D, on Forms 12 through 15 of the Report Forms, report cylinder number, cycle number, *PP*, *MFB2* and type of combustion event for each abnormal combustion cycle identified in sections 12.3 and 12.4.

12.7.1.1 An abnormal combustion event is defined as follows:

(a) PP only;

(b) MFB2 only;

(c) Both *PP* and *MFB2* (this is defined as an LSPI event).

12.8 *Calculation of Average Number of Preignition Events (AvPIE)*—Report on Form 4 of the Report Form (see Annex A11) the total number of LSPI events for each iteration A through D (see 11.3). Calculate the average number of events for these four iterations and report as *AvPIE*.

12.8.1 If Severity Adjusted or Industry Corrected final *AvPIE* values are less than zero, report the final *AvPIE* as zero.

12.9 *Oil Analyses*—Analyze the fresh oil and the samples drawn at the completion of each of the four valid iterations as follows. Report the results on Form 17 of the standardized report form set (see Annex A11).

12.9.1 *Metals Concentrations*—Using Test Method D5185, determine the mass fraction of the following eight elements: aluminum, copper, iron, lead, silicon, silver, sodium, and tin. Report the results in mg/kg.

12.9.2 *Fuel Dilution*—Measure by Test Method D3525. Report in %.

12.9.3 *Kinematic Viscosity (KV)*—Measure at 40 °C and 100 °C by Test Method D445. Report in mm^2/s.

13. Report

13.1 For reference oil results, use the standardized report form set available from the ASTM TMC[27] and data dictionary for reporting test results and for summarizing operational data (see Annex A11).

NOTE 10—Report the non-reference oil test results on the standard forms

AVA Documents
Document Sharing Hub

Full document details: ASTM D8291-24a

TABLE 11 Recorded Test Points

	Test Point	Units
Controlled	Engine speed	r/min
	Engine torque	N·m
	Coolant-out temperature	°C
	Oil-gallery temperature	°C
	Air-charge temperature	°C
	Inlet-air temperature	°C
	Inlet-air pressure (gauge)	kPa
	Exhaust back pressure (absolute)	kPa
	Fuel temperature	°C
	Inlet-air humidity	g/kg
	Coolant flow rate	L/min
Monitored	Fuel flow rate	kg/h
	Intake-manifold pressure (absolute)	kPa
	Air-charge pressure (absolute)	kPa
	Barometric pressure (absolute)	kPa
	Oil-gallery pressure (gauge)	kPa
	Oil-head pressure (gauge)	kPa
	Oil-filter-In temperature	°C
	Exhaust temperature	°C
	Crankcase pressure (gauge)	kPa
	Fuel pressure (gauge)	kPa
	Power	kW
	Pre-intercooler air pressure (absolute)	kPa
	Ambient temperature	°C
	Coolant-in temperature	°C
	Coolant-out pressure (gauge)	kPa
	Oil-Sump Temperature	°C
	Coolant flow rate	L/min
	Equivalence ratio (λ)	dimensionless
PCM CAN bus channels	Ignition timing advance for #1 cylinder	°
	Absolute throttle position	%
	Engine-coolant temperature	°C
	Inlet-air temperature	°C
	Equivalence ratio (λ)	dimensionless
	Absolute load value	%
	Intake-manifold pressure (absolute)	kPa
	Fuel-rail pressure (gauge)	kPa
	Boost pressure - raw value (absolute)	kPa
	Turbocharger wastegate duty cycle	%
	Actual intake (A) camshaft position	°
	Actual exhaust (B) camshaft position	°
	Intake (A) camshaft position actuator duty cycle	%
	Exhaust (B) camshaft position actuator duty cycle	%
	Charge-air-cooler temperature	°C

if the results are intended to be submitted as candidate oil results against a specification.

13.1.1 Fill out the report forms according to the formats shown in the data dictionary.

13.1.2 Transmit results to the TMC within five working days of test completion.

13.1.3 Transmit the results electronically as described in the ASTM Data Communications Committee Test Report Transmission Model (Section 2 — Flat File Transmission Format) available from the ASTM TMC. Upload files via the TMC's website.

13.2 Report all reference oil test results, whether aborted, invalidated, or successfully completed, to the TMC.

13.3 *Precision of Reported Units*—Use the Practice E29 rounding-off method for critical pass/fail test result data. Report the data to the same precision as indicated in data dictionary.

13.4 In the space provided, note the time, date, test hour, and duration of any shutdown or off-test condition. Start counting downtime at one hour after the end of step 6 in the test cycle (Table 9) or any time a test comes down in the middle of an iteration. The maximum allowable downtime is 48 h.

13.5 If a calibration period is extended beyond the normal calibration period length, make a note in the comment section and attach a written confirmation of the granted extension from the TMC to the test report. List the outcomes of previous runs that may need to be considered as part of the extension in the comment section.

14. Precision and Bias

14.1 *Precision:*

14.1.1 Test precision is established on the basis of operationally valid reference-oil test results monitored by the TMC.

14.1.2 *Intermediate Precision Conditions*—Conditions where test results are obtained with the same test method using the same test oil, with changing conditions such as operators, measuring equipment, test stands, test engines, and time.

NOTE 11—Intermediate precision is the appropriate term for this test

Document Sharing Hub

Full document details: ASTM D8291-24a

method, rather than repeatability, which defines more rigorous within-laboratory conditions.

14.1.2.1 *Intermediate Precision Limit (ip)*—The difference between two results obtained under intermediate precision conditions that in the long run, in the normal and correct conduct of the test method, exceed the value shown in Table 12 in only one case in twenty. When only a single test result is available, the intermediate precision limit can be used to calculate a range (test result ± intermediate precision limit) outside of which a second test result would be expected to fall about one time in twenty.

TABLE 12 Sequence IX Test Precision[A]

Quantity	Intermediate Precision[B]		Reproducibility[C]	
	S_{ip}[D]	*ip*	S_R[D]	*R*
Average number of preignition events, $\sqrt{AvPIE+0.5}$	0.2856	0.7997	0.2856	0.7997

[A] These statistics are based on 34 tests conducted on eight stand/engine combinations at three laboratories on ASTM reference oils 220, 221, and 223. They were calculated on March 29, 2017.
[B] See 14.1.2.
[C] See 14.1.3.
[D] *S* is the standard deviation.

14.1.3 *Reproducibility Conditions*—Conditions where test results are obtained with the same test method using the same test oil in different laboratories with different operators using different equipment.

14.1.3.1 *Reproducibility Limit (R)*—The difference between two results obtained under reproducibility conditions that would, in the long run, in the normal and correct conduct of the test method, exceed the values in Table 12 in only one case in twenty. When only a single test result is available, the reproducibility limit can be used to calculate a range (test result ± reproducibility limit) outside of which a second test result would be expected to fall about one time in twenty.

14.2 *Bias*—No estimate of bias for this test method is possible because the performance results for an oil are determined only under specific conditions of the test and no absolute standards exist.

15. Keywords

15.1 blowby; direct-injection; engine oil; lubricating oils; oil aging; preignition; Sequence IX; spark-ignition engine; turbocharged

ANNEXES

(Mandatory Information)

A1. ASTM TEST MONITORING CENTER ORGANIZATION

A1.1 The Test Monitoring Center (TMC), an affiliate of ASTM International, is a nonprofit organization located at 203 Armstrong Drive, Freeport, PA 16229. It is staffed to administer engineering studies; conduct laboratory visits; perform statistical analyses of test data; to blend, store, and ship reference oils; and to provide associated administrative functions connected with the referencing and calibration of various lubricant tests. The TMC maintains a close connection with test sponsors, test developers, the surveillance panels, and the testing laboratories. The management of these functions is vested in the ASTM Test Monitoring System Executive Committee, whose members are elected by Subcommittee D02.B0. The TMC operates under its associated bylaws and regulations, the bylaws of Committee D02 and of Subcommittee D02.B0, and the Rules and Regulations of the ASTM Test Monitoring System. The operating income of the TMC is obtained from fees levied on the reference oils supplied and on test reviews. These fees are set by the Test Monitoring Center Board of Directors.

A2. ASTM TEST MONITORING CENTER: CALIBRATION PROCEDURES

A2.1 *Reference Oils*—These oils are formulated or selected to represent specific chemical, or performance levels, or both. They are usually supplied directly to a testing laboratory under code numbers to ensure that the laboratory is not influenced by prior knowledge of acceptable results in assessing test results. The TMC determines the specific reference oil the laboratory shall test.

Documents
Document Sharing Hub
Full document details: ASTM D8291-24a

A2.1.1 *Reference Oil Data Reporting*—Test laboratories that receive reference oils for stand calibration shall submit data to the TMC on every sample of reference oil they receive. If a shipment contains any missing or damaged samples, the laboratory shall notify the TMC immediately.

A2.2 *Calibration Testing:*

A2.2.1 Full-scale calibration testing shall be conducted at regular intervals. These full-scale tests are conducted using coded reference oils supplied by the TMC. It is a laboratory's responsibility to keep the on-site reference oil inventory at or above the minimum level specified by the TMC test engineers.

A2.2.2 *Test Stands Used for Non-Standard Tests*—If a non-standard test is conducted on a previously calibrated test stand, the laboratory shall conduct a reference oil test on that stand to demonstrate that it continues to be calibrated, prior to running standard tests.

A2.3 *Reference Oil Storage*—Store reference oils under cover in locations where the ambient temperature is between –10 °C and +50 °C.

A2.4 *Analysis of Reference Oil*—Unless specifically authorized by the TMC, do not analyze TMC reference oils, either physically or chemically. Do not resell ASTM reference oils or supply them to other laboratories without the approval of the TMC. The reference oils are supplied only for the intended purpose of obtaining calibration under the ASTM Test Monitoring System. Any unauthorized use is strictly forbidden. The testing laboratory tacitly agrees to use the TMC reference oils exclusively in accordance with the TMC's published Policies for Use and Analysis of ASTM Reference Oils, and to run and report the reference oil test results according to TMC guidelines. Additional policies for the use and analysis of ASTM Reference Oils are available from the TMC.

A2.5 *Conducting a Reference Oil Test*—When laboratory personnel are ready to run a reference calibration test, they shall request an oil code via the TMC website.

A2.6 *Reporting Reference Oil Test Results*—Upon completion of the reference oil test, the test laboratory transmits the data electronically to the TMC, as described in Section 13. The TMC reviews the data and contacts the laboratory engineer to report the laboratory's calibration status. All reference oil test results, whether aborted, invalidated, or successfully completed, shall be reported to the TMC.

A2.6.1 All deviations from the specified test method shall be reported.

A3. ASTM TEST MONITORING CENTER: MAINTENANCE ACTIVITIES

A3.1 *Special Reference Oil Tests*—To ensure continuous severity and precision monitoring, calibration tests are conducted periodically throughout the year. Occasionally, the majority or even all of the industry's test stands will conduct calibration tests at roughly the same time. This could result in an unacceptably large time frame when very few calibration tests are conducted. The TMC can shorten or extend calibration periods as needed to provide a consistent flow of reference oil test data. Adjustments to calibration periods are made such that laboratories incur no net loss or gain in calibration status.

A3.2 *Special Use of the Reference Oil Calibration System*—The surveillance panel has the option to use the reference oil system to evaluate changes that have potential impact on test severity and precision. This option is only taken when a program of donated tests is not feasible. The surveillance panel and the TMC shall develop a detailed plan for the test program. This plan requires all reference oil tests in the program to be completed as close to the same time as possible, so that no laboratory/stand calibration status is left pending for an excessive length of time. In order to maintain the integrity of the reference oil monitoring system, each reference oil test is conducted so as to be interpretable for stand calibration. To facilitate the required test scheduling, the surveillance panel may direct the TMC to lengthen and shorten reference oil calibration periods within laboratories such that the laboratories incur no net loss or gain in calibration status. To ensure accurate stand or laboratory severity assessments, or both, conduct non-reference oil tests the same as reference oil tests.

A3.3 *Donated Reference Oil Test Programs*—The surveillance panel is charged with maintaining effective reference oil test severity and precision monitoring. During times of new parts introductions, new or re-blended reference oil additions, and procedural revisions, it may be necessary to evaluate the possible effects on severity and precision levels. The surveillance panel may choose to conduct a program of donated reference oil tests in those laboratories participating in the monitoring system, in order to quantify the effect of a particular change on severity and precision. Typically, the surveillance panel requests its panel members to volunteer enough reference oil test results to create a robust data set. Broad laboratory participation is needed to provide a representative sampling of the industry. To ensure the quality of the data obtained, donated tests are conducted on calibrated test stands. The surveillance panel shall arrange an appropriate number of donated tests and ensure completion of the test program in a timely manner.

A3.4 *Intervals Between Reference Oil Tests*—Under special circumstances, such as extended downtime caused by industrywide parts or fuel shortages, the TMC may extend the intervals between reference oil tests.

Documents
Document Sharing Hub

Full document details: ASTM D8291-24a

A3.5 *Introducing New Reference Oils*—Reference oils produce various results. When new reference oils are selected, participating laboratories will be requested to conduct their share of tests to enable the TMC to recommend industry test targets. ASTM surveillance panels require a minimum number of tests to establish the industry test targets for new reference oils.

A3.6 *TMC Information Letters*—Occasionally it is necessary to revise the test method and notify the test laboratories of the change prior to consideration of the revision by Subcommittee D02.B0. In such a case, the TMC issues an Information Letter. Information Letters are balloted semi-annually by Subcommittee D02.B0, and subsequently by D02. By this means, the Society due process procedures are applied to these Information Letters.

A3.6.1 *Issuing Authority*—The authority to issue an Information Letter differs according to its nature. In the case of an Information Letter concerning a part number change which does not affect test results, the TMC is authorized to issue such a letter. Long-term studies by the surveillance panel to improve the test procedure through improved operation and hardware control may result in the issuance of an Information Letter. If obvious procedural items affecting test results need immediate attention, the test sponsor and the TMC issue an Information Letter and present the background and data supporting that action to the surveillance panel for approval prior to the semiannual Subcommittee D02.B0 meeting.

A3.7 *TMC Memoranda*—In addition to the Information Letters, supplementary memoranda are issued. These are developed by the TMC and distributed to the appropriate surveillance panel and participating laboratories. They convey such information as batch approvals for test parts or materials, clarification of the test procedure, notes and suggestions of the collection and analysis of special data that the TMC may request, or for any other pertinent matters having no direct effect on the test performance, results, or precision and bias.

A4. ASTM TEST MONITORING CENTER: RELATED INFORMATION

A4.1 *New Laboratories*—Laboratories wishing to become part of the ASTM Test Monitoring System will be requested to conduct reference oil tests to ensure that the laboratory is using the proper testing techniques. Information concerning fees, laboratory inspection, reagents, testing practices, appropriate committee membership, and rater training can be obtained by contacting the TMC Director.

A4.2 *Information Letters: COTCO Approval*—Authority for the issuance of Information Letters was given by the committee on Technical Committee Operations in 1984, as follows: "COTCO recognizes that D02 has a unique and complex situation. The use of Information Letters is approved providing each letter contains a disclaimer to the affect that such has not obtained ASTM consensus. These Information Letters should be moved to such consensus as rapidly as possible."

A4.3 *Precision Data*—The TMC determines the precision of test methods by analyzing results of calibration tests conducted on reference oils. Precision data are updated regularly. Current precision data can be obtained from the TMC.

A5. CONTROL AND DATA ACQUISITION REQUIREMENTS

A5.1 *General Description*:

A5.1.1 The data acquisition system shall be capable of logging the operational data in digital format. It is to the advantage of the laboratory that the system be capable of real time plotting of controlled quantities to help assess test validity. The systems shall be capable of calculating real time quality index as this will be monitored throughout the test as designated in A5.4.

A5.1.2 Control capability is not dictated by this procedure. The control system shall be capable of keeping the controlled quantities within the limits specified in Table 8 and maintain the quality index shown in A5.4.

A5.1.3 Design the control and data acquisition system to meet the requirements listed below. Use the recommendations laid out in the Instrumentation Task Force Report and Data Acquisition Task Force Report for any items not addressed in Annex A3.

Documents
Document Sharing Hub

Full document details: ASTM D8291-24a

A5.2 *Digital Recording Frequency*—The maximum allowable time period over which data can be accumulated is 1 s. This data can be filtered, as described in A5.5, and will be considered a reading.

A5.3 *Steady State Operation*:

A5.3.1 Each test interval of 175 000 engine cycles is conducted at steady state operation. Calculate the Quality Index (*QI*), as described in A5.4, using values reported to the accuracy levels in Table A5.1.

A5.3.2 The time intervals between recorded readings shall not exceed 1 s. Data shall be recorded throughout the length of each test iteration.

A5.4 *QI Calculation*:

A5.4.1 In accordance with the DACA II Report II, calculate the *QI* (see A5.4) for all controlled quantities for the steady state portion of each test stage throughout the entire test. Ensure missing or bad quality data are accounted for in accordance with the DACA II Report.

A5.4.2 Update the *QI* periodically throughout the test to determine the operational validity while the test is in progress. This could indicate if the test operational validity is in question before the test has completed.

A5.4.3 Use the Eq A5.1 and the values listed in Table A5.2 to calculate the QI_i:

$$QI_i = 1 - \frac{1}{n}\sum_{1}^{n}\left(\frac{U+L-2X_i}{U-L}\right)^2 \quad \text{(A5.1)}$$

TABLE A5.1 Accuracy Levels of Data Points to be Used in QI Calculations

Quantity	Field Length
Speed	XXXX.
Humidity	XX.X
Temperature	XX.X
Load	XXX.X
Inlet Air Pressure	XX.XXX
Exhaust Backpressure	XX.X

where:

i = the quantity measured in the test,
X_i = the recorded value of the measured quantity i,
U = the upper-specification limit for the measured quantity i,
L = the lower-specification limit for the measured quantity i, and
n = the total number of data points taken as determined from test length and procedural specified sampling rate.

A5.4.4 Reset data that is greater than the over-range values listed in Table A5.2 with the over-range value listed in Table A5.2.

A5.4.5 Reset data that is lower than the under-range values listed in Table A5.2 with the under-range value listed in Table A5.2.

A5.4.6 Round the *QI* values to the nearest 0.001.

A5.4.7 Report the *QI* values on Forms 5 to 8 of the test report.

A5.4.8 If the end-of-test *QI* value is below 0.000 for reference oil tests, review the test operations with the TMC. The TMC issues a letter to the laboratory and the test sponsor on its opinion.

A5.4.8.1 The laboratory documents its comments regarding the end-of-test *QI* values less than 0.000 for non-reference oil tests. The laboratory or test sponsor might request TMC review of test operations for non-reference oil tests. The TMC issues a letter to document its opinion.

A5.5 *Time Constants*:

A5.5.1 Filtering can be applied to all control quantities. The amount of filtering applied shall not allow time constants to exceed the values listed in Table A5.3. This time constant shall pertain to the entire system, running from the sensor to the display and data acquisition.

A5.5.2 Maximum allowable system time constants for the controlled quantities are shown in Table A5.3.

Documents
Document Sharing Hub
Full document details: ASTM D8291-24a

TABLE A5.2 L and U Limits and Over- and Under-Range Values

Quantity, unit	L	U	Over-range	Under-range
Speed, r/min	1730	1770	3941	0
Torque, N·m	264	274	817	0
Coolant out temperature, °C	94.5	95.5	289	0
Oil gallery temperature, °C	94.5	95.5	150	40
Air charge temperature, °C	42.5	43.5	98	0
Inlet air temperature, °C	29.5	30.5	85	0
Fuel temperature, °C	29.5	30.5	1190	0
Back pressure, kPa (absolute)	102	106	323	0
Inlet air pressure, kPa (gauge)	0.03	0.07	2.2	–2.1
Humidity, g/kg	10.9	11.9	66	0
Coolant pressure, kPa (gauge)	68	72	290	0
Coolant flow rate, L/min	53	57	274	0

TABLE A5.3 Maximum Allowable Time Constants

Control quantity, unit	Time constant, s
Engine speed, r/min	0.5
Torque, N·m	0.7
Engine-oil-in temperature °C	2.4
Engine-coolant-out temperature, °C	2.4
Engine-coolant flowrate, L/min	8.0
Inlet-air temperature, °C	2.4
Inlet-air pressure, kPa	1.2
Exhaust back pressure, kPa	1.2
Engine-coolant pressure, kPa	1.2

A6. TEMPERATURE, PRESSURE AND OTHER CONTROL SYSTEMS

A6.1 See Figs. A6.1-A6.19.

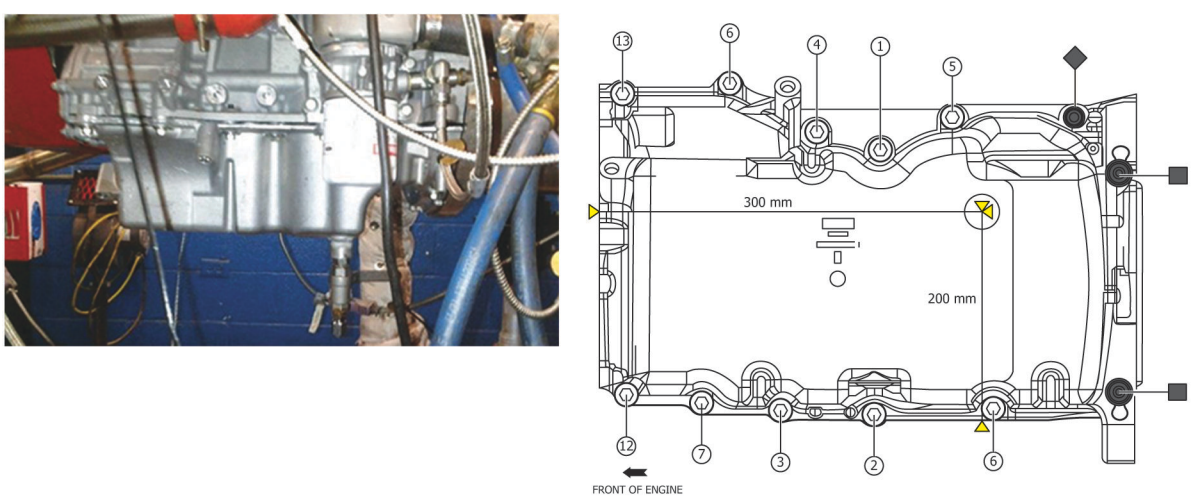

FIG. A6.1 Oil Pan Drain Locations

Documents
Document Sharing Hub
Full document details: ASTM D8291-24a

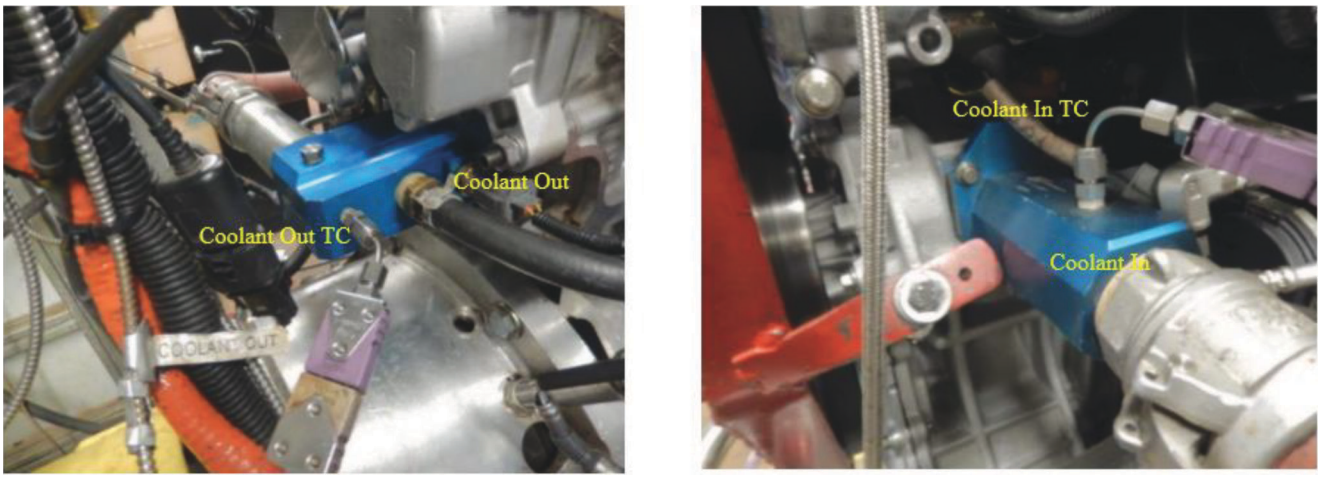

FIG. A6.2 Coolant Out and In Connections and Thermocouple Locations

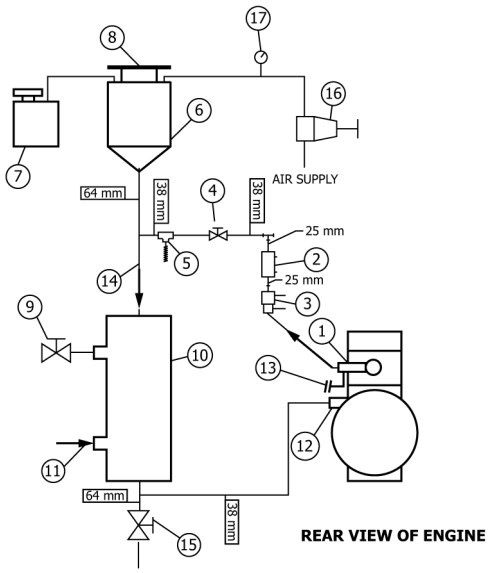

Locate the temperature sensors in the thermostat housing and at water pump inlet as shown in 1 and 12 respectively.

(*1*) Thermostat housing, coolant out with temperature sensor (P/N OHTVH-009-1)
(*2*) Sight glass
(*3*) Flowmeter (can be installed on the inlet or outlet sides of the engine, outlet installation shown here)
(*4*) Flow-control valve
(*5*) Optional temperature sensor
(*6*) Fabricated coolant reservoir
(*7*) Constant full expansion tank
(*8*) Pressure radiator cap (MOTORCRAFT RS40 P/N D2YY-8100-A)
(*9*) Process-water control valve (regulated by temperature controller with three remote set points)
(*10*) Heat exchanger (ITT Standard P/N 5-030-06-048-001 TYP.) (Run engine coolant through the tube side)
(*11*) Process water supply (shell side)
(*12*) Water-pump inlet with temperature sensor (OHTVH-008-1)
(*13*) Turbocharger-coolant return
(*14*) Engine coolant (tube side)
(*15*) Coolant system drain valve
(*16*) Coolant-pressure regulator
(*17*) Coolant pressure

FIG. A6.3 Schematic Showing Components of a Typical Engine Cooling System

AVA Documents
Document Sharing Hub

Full document details: ASTM D8291-24a

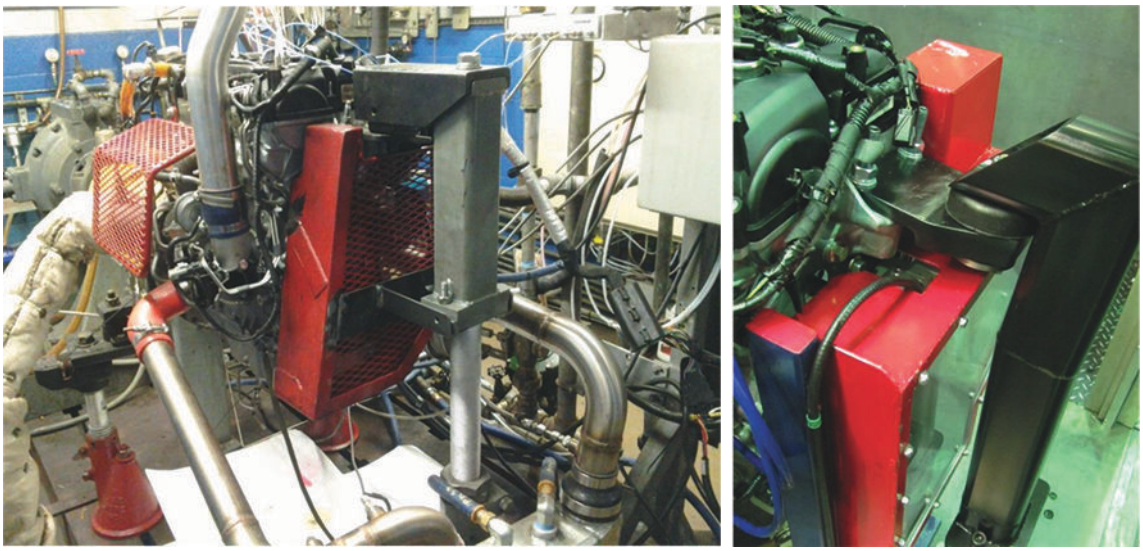

FIG. A6.4 Motor Mount, Front (Two Options Shown)

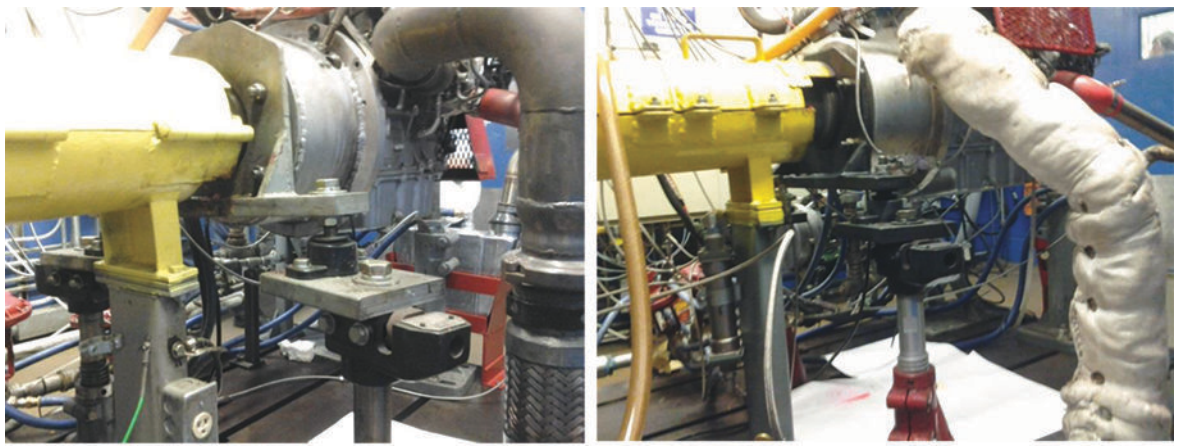

FIG. A6.5 Motor Mount, Rear

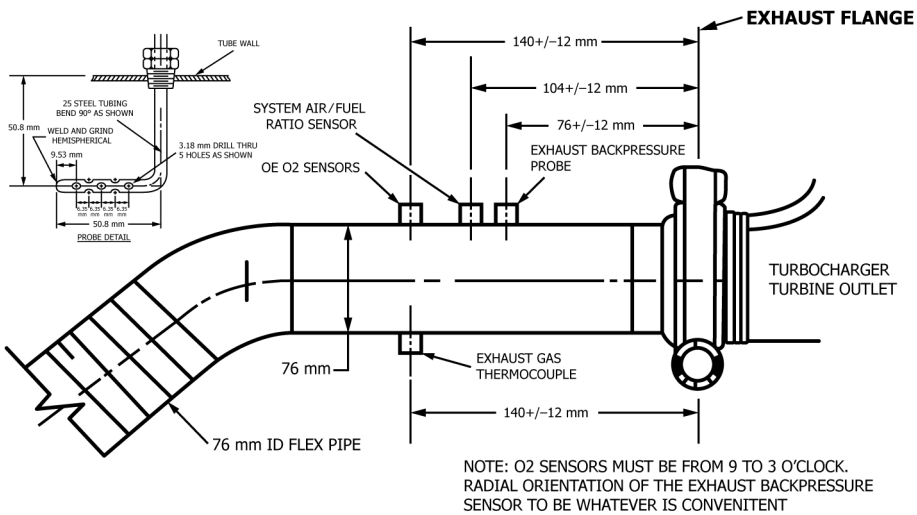

FIG. A6.6 Exhaust Measurements and Instrumentation

AVA Documents
Document Sharing Hub

Full document details: ASTM D8291-24a

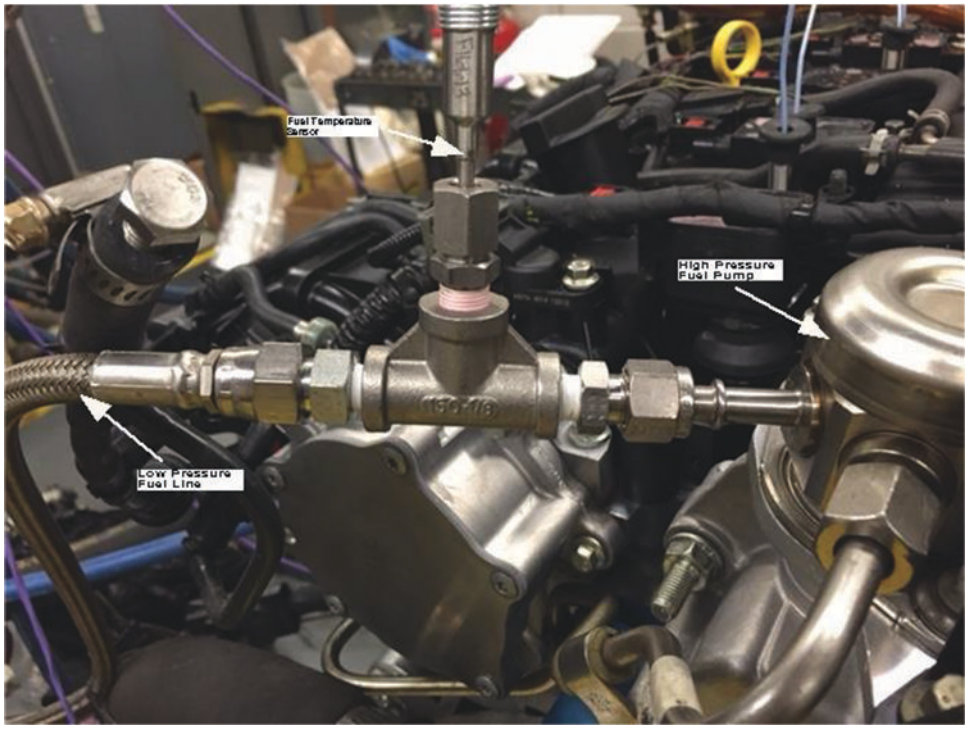

FIG. A6.7 Location of Fuel-Temperature Sensor

Documents
Document Sharing Hub
Full document details: ASTM D8291-24a

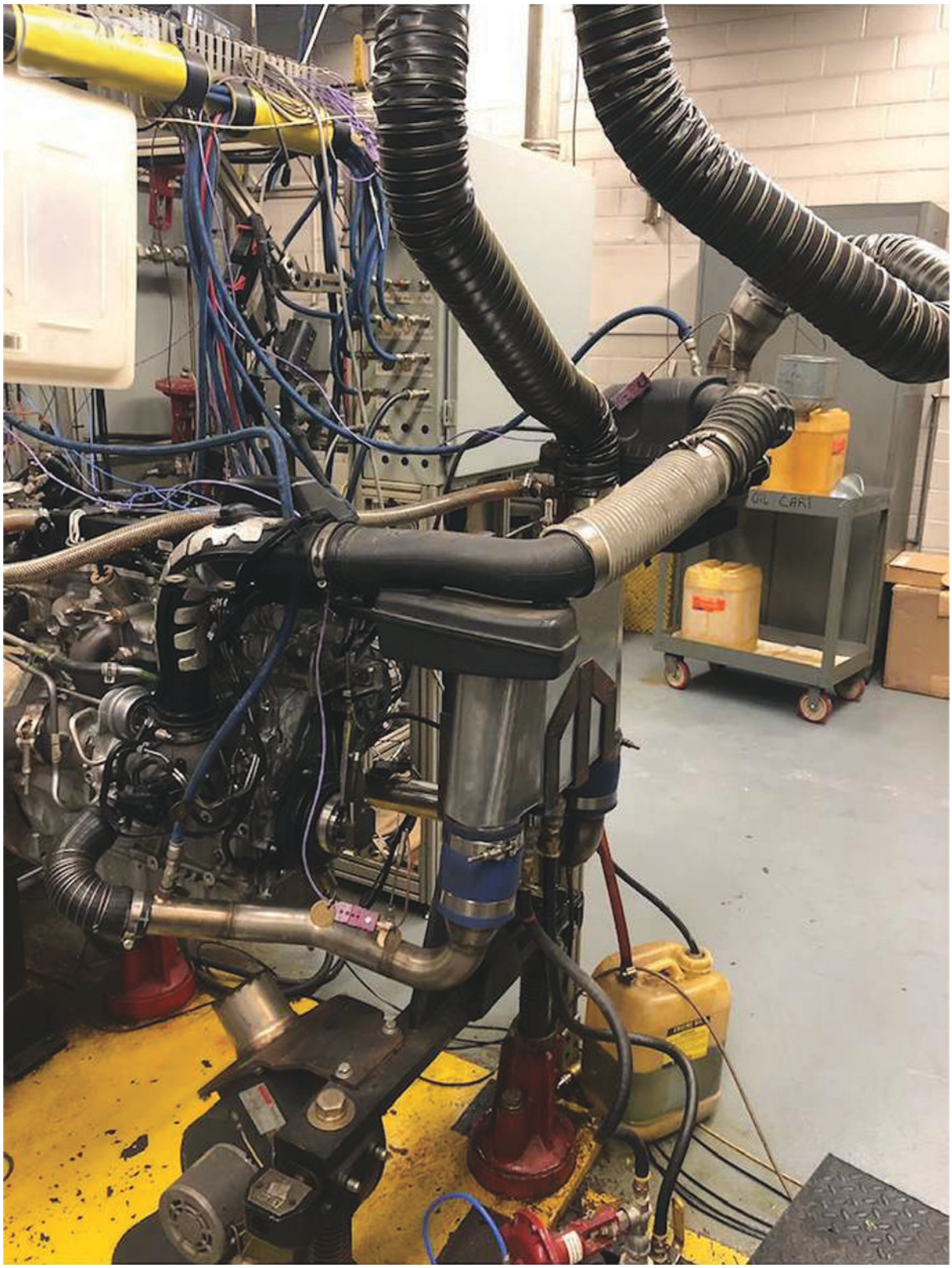

FIG. A6.8 Typical Air Inlet System

Documents
Document Sharing Hub

Full document details: ASTM D8291-24a

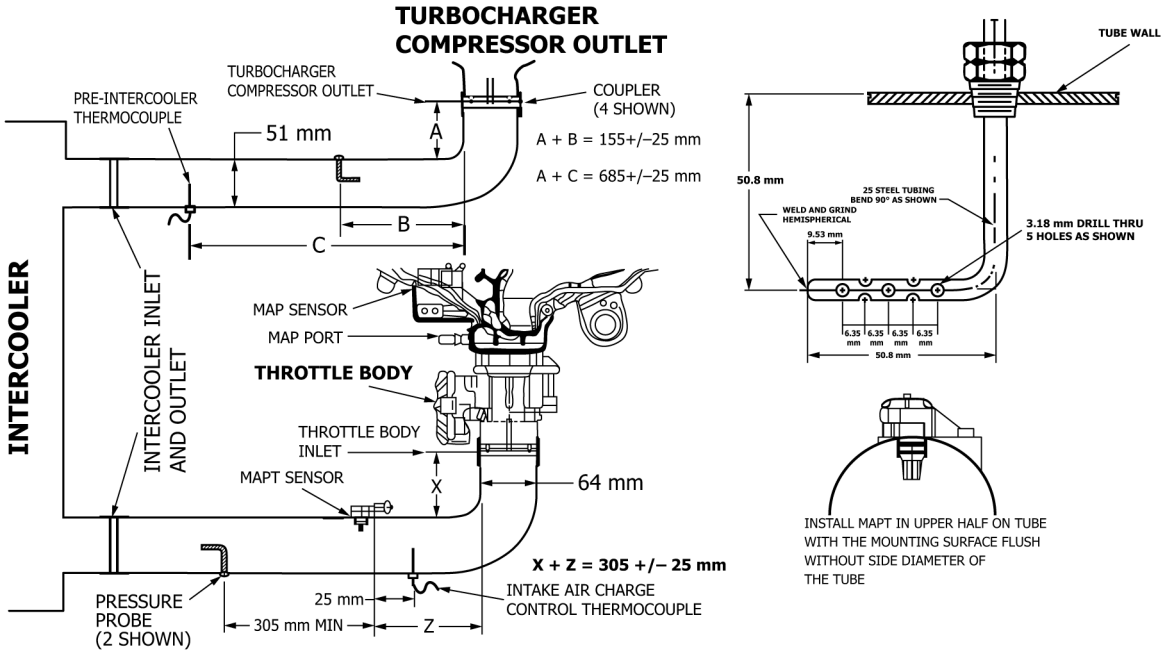

FIG. A6.9 Intercooler Tubing Measurements and Instrumentation

Documents
Document Sharing Hub
Full document details: ASTM D8291-24a