NOTICE: This standard has either been superseded and replaced by a new version or discontinued.
Contact ASTM International (www.astm.org) for the latest information.

Designation: D 909 – 00

Designation: 119/96

An American National Standard
Method 6012.6—Federal Test
Method Standard No. 791b

Standard Test Method for Knock Characteristics of Aviation Gasolines by the Supercharge Method[1]

This standard is issued under the fixed designation D 909; the number immediately following the designation indicates the year of original adoption or, in the case of revision, the year of last revision. A number in parentheses indicates the year of last reapproval. A superscript epsilon (ϵ) indicates an editorial change since the last revision or reapproval.

1. Scope

1.1 This test method covers the determination of the knock-limited power, under supercharge rich-mixture conditions, of fuels for use in spark-ignition reciprocating aircraft engines, in terms of ASTM supercharge octane or performance number. By operational considerations, this test method is restricted to testing fuels of 85 ASTM supercharge octane number and over.

1.2 The values stated in inch-pound units are to be regarded as the standard. The values in parentheses are for information only.

1.3 *This standard does not purport to address all of the safety concerns, if any, associated with its use. It is the responsibility of the user of this standard to establish appropriate safety and health practices and determine the applicability of regulatory limitations prior to use.* Specific precautionary statements are given in Annex A7.

2. Referenced Documents

2.1 *ASTM Standards:*

D 1368 Test Method for Trace Concentrations of Lead in Primary Reference Fuels[2]

D 2268 Test Method for Analysis of High Purity[3]

D 2599 Test Method for Lead in Gasoline by X-Ray Spectrometry [4]

D 2699 Test Method for Research Octane Number of Spark-Ignition Engine Fuel[5]

D 2700 Test Method for Knock Characteristics of Motor and Aviation Fuels by the Motor Method[5]

D 3237 Test Method for Lead in Gasoline by Atomic Absorption Spectrometry[6]

D 3341 Test Method for Lead in Gasoline by the Iodine Monochloride Method[6]

D 4057 Practice for Manual Sampling of Petroleum and Petroleum Products[6]

E 1 Specifications for ASTM Thermometers[7]

3. Terminology

3.1 *Definitions:*

3.1.1 *ASTM supercharge octane number of a fuel below 100*—the whole number nearest the percentage by volume of *iso*octane (equals 100) in a blend with *n*-heptane (equals 0) that matches the knock characteristics of the fuel when compared by this test method.

3.1.2 *ASTM supercharge rating of a fuel above 100*—the amount of tetraethyllead (TEL) in *iso*octane, expressed in millilitres per U.S. gallon.

3.2 ASTM supercharge ratings are normally expressed as octane numbers below 100 and as performance numbers above 100. At 100, a rating may be expressed either as 100 octane number or as 100 performance number. Sometimes it is desirable to convert the ASTM supercharge octane number to performance number. This can be done by using Table 1. Table 2 lists the corresponding performance numbers for various concentrations of tetraethyllead in *iso*octane.

4. Summary of Test Method

4.1 ASTM supercharge octane or performance number of a fuel is determined by comparing its knock-limited power with those for bracketing blends of reference fuels under standard operating conditions. This is done at constant compression ratio by varying the manifold pressure and fuel flow rate, the independent variables of the test, and measuring indicated mean effective pressure (imep) at enough points to define the mixture response curves for the sample and the reference fuels. When the knock-limited power for the sample is bracketed between those for two adjacent reference fuels suitably chosen from the prescribed list (see 12.1.2), the rating of the sample is calculated by interpolation at the fuel-air ratio for maximum power for the lower bracketing reference fuel.

[1] This test method is under the jurisdiction of ASTM Committee D02 on Petroleum Products and Lubricants and is the direct responsibility of Subcommittee D02.01 on Combustion Characteristics.

Current edition approved April 10, 2000. Published June 2000. Originally published as D 909 – 58. Last previous edition D 909 – 95.

[2] Discontinued, see *1994 Annual Book of ASTM Standards*, Vol 05.01.

[3] Annual Book of ASTM Standards, Vol 05.01.

[4] Discontinued, Replaced by Test Method D 5059, see *1992 Annual Book of ASTM Standards*, Vol 05.02.

[5] *Annual Book of ASTM Standards*, Vol 05.04.

[6] *Annual Book of ASTM Standards*, Vol 05.02.

[7] *Annual Book of ASTM Standards*, Vol 14.03.

Copyright © ASTM, 100 Barr Harbor Drive, West Conshohocken, PA 19428-2959, United States.

Documents
Document Sharing Hub

Full document details: ASTM D909-00

TABLE 1 ASTM Conversion of Octane Numbers to Performance Numbers

Octane Number	0.0	0.1	0.2	0.3	0.4	0.5	0.6	0.7	0.8	0.9	Octane Number
					Performance Number						
70	48.3	48.4	48.4	48.5	48.6	48.7	48.8	48.9	49.0	49.0	70
71	49.1	49.2	49.3	49.4	49.5	49.6	49.6	49.7	49.8	49.9	71
72	50.0	50.1	50.2	50.3	50.4	50.5	50.5	50.6	50.7	50.8	72
73	50.9	51.0	51.1	51.2	51.3	51.4	51.5	51.6	51.7	51.8	73
74	51.9	51.9	52.0	52.1	52.2	52.3	52.4	52.5	52.6	52.7	74
75	52.8	52.9	53.0	53.1	53.2	53.3	53.4	53.5	53.6	53.7	75
76	53.8	53.9	54.1	54.2	54.3	54.4	54.5	54.6	54.7	54.8	76
77	54.9	55.0	55.1	55.2	55.3	55.4	55.6	55.7	55.8	55.9	77
78	56.0	56.1	56.2	56.3	56.5	56.6	56.7	56.8	56.9	57.0	78
79	57.1	57.3	57.4	57.5	57.6	57.7	57.9	58.0	58.1	58.2	79
80	58.3	58.5	58.6	58.7	58.8	58.9	59.1	59.2	59.3	59.4	80
81	59.6	59.7	59.8	60.0	60.1	60.2	60.3	60.5	60.6	60.7	81
82	60.9	61.0	61.1	61.3	61.4	61.5	61.7	61.8	61.9	62.1	82
83	62.2	62.4	62.5	62.6	62.8	62.9	63.1	63.2	63.3	63.5	83
84	63.6	63.8	63.9	64.1	64.2	64.4	64.5	64.7	64.8	65.0	84
85	65.1	65.3	65.4	65.6	65.7	65.9	66.0	66.2	66.4	66.5	85
86	66.7	66.8	67.0	67.2	67.3	67.5	67.6	67.8	68.0	68.1	86
87	68.3	68.5	68.6	68.8	69.0	69.1	69.3	69.5	69.7	69.8	87
88	70.0	70.2	70.4	70.5	70.7	70.9	71.1	71.2	71.4	71.6	88
89	71.8	72.0	72.2	72.4	72.5	72.7	72.9	73.1	73.3	73.5	89
90	73.7	73.9	74.1	74.3	74.5	74.7	74.9	75.1	75.3	75.5	90
91	75.7	75.9	76.1	76.3	76.5	76.7	76.9	77.1	77.3	77.6	91
92	77.8	78.0	78.2	78.4	78.7	78.9	79.1	79.3	79.5	79.8	92
93	80.0	80.2	80.5	80.7	80.9	81.2	81.4	81.6	81.9	82.1	93
94	82.4	82.6	82.8	83.1	83.3	83.6	83.8	84.1	84.3	84.6	94
95	84.8	85.1	85.4	85.6	85.9	86.2	86.4	86.7	87.0	87.2	95
96	87.5	87.8	88.1	88.3	88.6	88.9	89.2	89.5	89.7	90.0	96
97	90.3	90.6	90.9	91.2	91.5	91.8	92.1	92.4	92.7	93.0	97
98	93.3	93.6	94.0	94.3	94.6	94.9	95.2	95.6	95.9	96.2	98
99	96.6	96.9	97.2	97.6	97.9	98.2	98.6	98.9	99.3	99.6	99
100	100.0	...	...	...	...	...	...	...	...	...	100

Conversion Equation for Performance Number (PN):
PN = 2800/(128 − Octane number)

5. Significance and Use

5.1 The supercharge test method provides a means of determining the rich-mixture antiknock performance of aviation gasoline. The test method utilizes a single-cylinder engine and requires critical adjustment of the fuel/air ratio and inlet-manifold pressure to establish the knock-limited power characteristic of the gasoline. The knock-limited power rating of the gasoline sample is determined by comparing its knock-limited power level with that of the knock-limited power level of primary reference fuels whose volumetric composition establishes the rating scale. The rating is expressed as an octane number at and below 100 and as a performance number above 100.

5.2 It is customary to express grades of aviation fuel in terms of double numbers. The first number expresses the antiknock quality by its lean-mixture or aviation rating, and the second by its rich-mixture or supercharge rating. See Test Method D 2700.

5.3 This test is used by engine manufacturers, by petroleum refiners and marketers, and in commerce as a primary specification measurement to ensure proper matching of fuel antiknock quality and engine requirement.

6. Apparatus

6.1 The knock testing unit illustrated in Fig. 1 consists of a single-cylinder engine with accessories mounted on a stationary base. It is equipped with controls for varying manifold pressure and fuel flow. The engine and equipment specified in Annex A1 on Apparatus shall be used without modification, and installed as directed in Annex A5 on Installation and Assembly. It is necessary to keep the apparatus in good mechanical condition as described in Annex A4 on Maintenance.

7. Reference Materials

7.1 *ASTM Knock Test Reference Fuels*, conforming to the specifications in A2.9.1 of Annex A2 on Reference Materials and Blending Accessories, are the following:

7.1.1 ASTM *iso*octane (2,2,4-trimethylpentane),

7.1.2 ASTM *n*-heptane,

7.1.3 ASTM 80 octane number blend of 7.1.1 and 7.1.2.

7.2 *Tetraethyllead*, conforming to the specifications and requirements in A2.9.4 of Annex A2 on Reference Materials and Blending Accessories, blended with ASTM *iso*octane is required for making ratings above 100 octane number.

AVA Documents
Document Sharing Hub

Full document details: ASTM D909-00

TABLE 2 ASTM Conversion of Tetraethyllead in Isooctane to Performance Numbers

Tetraethyl-lead in *Iso*octane, mL per U. S. gal	0.00	0.01	0.02	0.03	0.04	0.05	0.06	0.07	0.08	0.09	Tetraethyl-lead in *Iso*octane, mL per U. S. gal
					Performance Number						
0.0	100.0	100.4	100.8	101.2	101.6	102.0	102.4	102.8	103.2	103.6	0.0
0.1	104.0	104.3	104.7	105.0	105.4	105.7	106.1	106.4	106.8	107.1	0.1
0.2	107.4	107.8	108.1	108.4	108.7	109.0	109.3	109.6	109.9	110.2	0.2
0.3	110.5	110.8	111.1	111.4	111.7	111.9	112.2	112.5	112.8	113.0	0.3
0.4	113.3	113.6	113.8	114.1	114.3	114.6	114.8	115.1	115.3	115.6	0.4
0.5	115.8	116.1	116.3	116.5	116.8	117.0	117.2	117.4	117.7	117.9	0.5
0.6	118.1	118.3	118.6	118.8	119.0	119.2	119.4	119.6	119.8	120.0	0.6
0.7	120.2	120.4	120.6	120.8	121.0	121.2	121.4	121.6	121.8	122.0	0.7
0.8	122.2	122.4	122.6	122.8	122.9	123.1	123.3	123.5	123.7	123.9	0.8
0.9	124.0	124.2	124.4	124.5	124.7	124.9	125.1	125.2	125.4	125.6	0.9
1.0	125.7	125.9	126.1	126.2	126.4	126.5	126.7	126.9	127.0	127.2	1.0
1.1	127.3	127.5	127.6	127.8	127.9	128.1	128.2	128.4	128.5	128.7	1.1
1.2	128.8	129.0	129.1	129.3	129.4	129.6	129.7	129.8	130.0	130.1	1.2
1.3	130.2	130.4	130.5	130.7	130.8	130.9	131.1	131.2	131.3	131.5	1.3
1.4	131.6	131.7	131.8	132.0	132.1	132.2	132.4	132.5	132.6	132.7	1.4
1.5	132.9	133.0	133.1	133.2	133.3	133.5	133.6	133.7	133.8	133.9	1.5
1.6	134.1	134.2	134.3	134.4	134.5	134.6	134.8	134.9	135.0	135.1	1.6
1.7	135.2	135.3	135.4	135.6	135.7	135.8	135.9	136.0	136.1	136.2	1.7
1.8	136.3	136.4	136.5	136.6	136.7	136.8	137.0	137.1	137.2	137.3	1.8
1.9	137.4	137.5	137.6	137.7	137.8	137.9	138.0	138.1	138.2	138.3	1.9
2.0	138.4	138.5	138.6	138.7	138.8	138.9	139.0	139.0	139.1	139.2	2.0
2.1	139.3	139.4	139.5	139.6	139.7	139.8	139.9	140.0	140.1	140.2	2.1
2.2	140.3	140.4	140.4	140.5	140.6	140.7	140.8	140.9	141.0	141.1	2.2
2.3	141.1	141.2	141.3	141.4	141.5	141.6	141.7	141.8	141.8	141.9	2.3
2.4	142.0	142.1	142.2	142.3	142.3	142.4	142.5	142.6	142.7	142.8	2.4
2.5	142.8	142.9	143.0	143.1	143.2	143.2	143.3	143.4	143.5	143.6	2.5
2.6	143.6	143.7	143.8	143.9	143.9	144.0	144.1	144.2	144.2	144.3	2.6
2.7	144.4	144.5	144.6	144.6	144.7	144.8	144.8	144.9	145.0	145.1	2.7
2.8	145.1	145.2	145.3	145.4	145.4	145.5	145.6	145.7	145.7	145.8	2.8
2.9	145.9	145.9	146.0	146.1	146.1	146.2	146.3	146.4	146.4	146.5	2.9
3.0	146.6	146.6	146.7	146.8	146.8	146.9	147.0	147.0	147.1	147.2	3.0
3.1	147.2	147.3	147.4	147.4	147.5	147.6	147.6	147.7	147.8	147.8	3.1
3.2	147.9	148.0	148.0	148.1	148.2	148.2	148.3	148.3	148.4	148.5	3.2
3.3	148.5	148.6	148.7	148.7	148.8	148.8	148.9	149.0	149.0	149.1	3.3
3.4	149.2	149.2	149.3	149.3	149.4	149.5	149.5	149.6	149.6	149.7	3.4
3.5	149.8	149.8	149.9	149.9	150.0	150.1	150.1	150.2	150.2	150.3	3.5
3.6	150.3	150.4	150.5	150.5	150.6	150.6	150.7	150.7	150.8	150.9	3.6
3.7	150.9	151.0	151.0	151.1	151.1	151.2	151.2	151.3	151.4	151.4	3.7
3.8	151.5	151.5	151.6	151.6	151.7	151.7	151.8	151.8	151.9	152.0	3.8
3.9	152.0	152.1	152.1	152.2	152.2	152.3	152.3	152.4	152.4	152.5	3.9
4.0	152.5	152.6	152.6	152.7	152.7	152.8	152.8	152.9	153.0	153.0	4.0
4.1	153.1	153.1	153.2	153.2	153.3	153.3	153.4	153.4	153.5	153.5	4.1
4.2	153.6	153.6	153.7	153.7	153.8	153.8	153.9	153.9	154.0	154.0	4.2
4.3	154.1	154.1	154.1	154.2	154.2	154.3	154.3	154.4	154.4	154.5	4.3
4.4	154.5	154.6	154.6	154.7	154.7	154.8	154.8	154.9	154.9	155.0	4.4
4.5	155.0	155.1	155.1	155.1	155.2	155.2	155.3	155.3	155.4	155.4	4.5
4.6	155.5	155.5	155.6	155.6	155.6	155.7	155.7	155.8	155.8	155.9	4.6
4.7	155.9	156.0	156.0	156.0	156.1	156.1	156.2	156.2	156.3	156.3	4.7
4.8	156.4	156.4	156.4	156.5	156.5	156.6	156.6	156.7	156.7	156.7	4.8
4.9	156.8	156.8	156.9	156.9	157.0	157.0	157.0	157.1	157.1	157.2	4.9
5.0	157.2	157.2	157.3	157.3	157.4	157.4	157.5	157.5	157.5	157.6	5.0
5.1	157.6	157.7	157.7	157.7	157.8	157.8	157.9	157.9	157.9	158.0	5.1
5.2	158.0	158.1	158.1	158.1	158.2	158.2	158.3	158.3	158.3	158.4	5.2
5.3	158.4	158.5	158.5	158.5	158.6	158.6	158.7	158.7	158.7	158.8	5.3
5.4	158.8	158.9	158.9	158.9	159.0	159.0	159.0	159.1	159.1	159.2	5.4
5.5	159.2	159.2	159.3	159.3	159.3	159.4	159.4	159.5	159.5	159.5	5.5
5.6	159.6	159.6	159.6	159.7	159.7	159.8	159.8	159.8	159.9	159.9	5.6
5.7	159.9	160.0	160.0	160.1	160.1	160.1	160.2	160.2	160.2	160.3	5.7
5.8	160.3	160.3	160.4	160.4	160.4	160.5	160.5	160.6	160.6	160.6	5.8
5.9	160.7	160.7	160.7	160.8	160.8	160.8	160.9	160.9	160.9	161.0	5.9
6.0	161.0	...	...	...	...	...	...	...	...	...	6.0

8. Sampling

8.1 Sampling shall be done in accordance with the applicable procedure described in Practice D 4057.

9. Operating Conditions

9.1 The following standard operating conditions (see Annex A3 on Operation for further details) are mandatory:

9.1.1 *Engine Speed*, 1800 ± 45 rpm, including friction measurement. The maximum variation throughout a test shall not exceed 45 rpm, exclusive of friction measurement.

9.1.2 *Compression Ratio*, 7.0 to 1, fixed by adjustment of the clearance volume to 108 ± 0.5 mL on cylinders of standard

AVA Documents
Document Sharing Hub

Full document details: ASTM D909-00

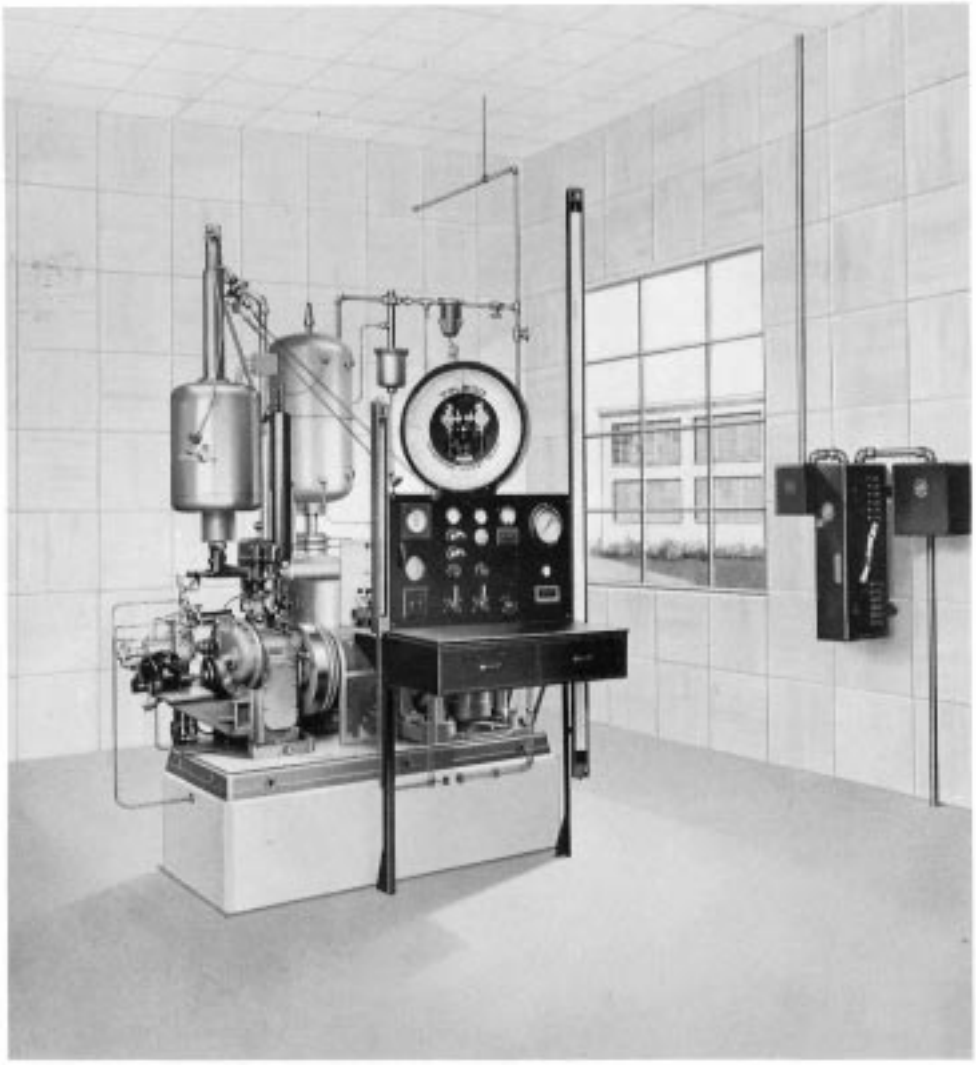

FIG. 1 Supercharge Unit

bore by the bench tilt procedure, Section A3.2 of Annex A3. Clearance volumes for oversize cylinders are shown in this section. If the Type D-1 detonation meter pickup is used, the clearance volumes are 2 mL less than for the Waukesha plug.

9.1.3 *Spark Advance*, constant, 45°.

9.1.4 *Spark-Plug Gap*, 0.020 ± 0.003 in. (0.51 ± 0.13 mm).

9.1.5 *Ignition Settings*:

9.1.5.1 *Breaker-Point Gap*, 0.020 in. (0.51 mm).

9.1.5.2 Breakerless ignition system basic setting for transducer to rotor (vane) gap is 0.003 to 0.005 in. (0.08 to 0.13 mm).

9.1.6 *Valve Clearances*, 0.008 ± 0.001 in. for the intake, 0.010 ± 0.001 in. for the exhaust, measured with the engine hot and running at equilibrium under standard operating conditions on a reference fuel of 100 octane number at the fuel-air ratio for maximum power and an absolute manifold pressure of 30 in. Hg (101.6 kPa).

9.1.7 *Crankcase Lubricating Oil*, SAE 50, having a kinematic viscosity of 16.77 to 24.96 cSt (mm^2/s) at 210°F (99°C) and a viscosity index of not less than 85. Oils containing viscosity index improvers or multi-graded oils shall not be used.

9.1.8 *Oil Pressure*, 60 ± 5 psi (0.41 ± 0.03 MPa) gage in the oil gallery leading to the crankshaft bearings.

9.1.9 *Oil Temperature*, 165 ± 5°F (74 ± 3°C) at the entrance to the oil gallery.

9.1.10 *Coolant Temperature*, 375 ± 5°F (191 ± 3°C) in the top of the coolant return line from the condenser to the cylinder.

9.1.11 *Fuel-Pump Pressure*, 15 ± 2 psi (0.10 ± 0.01 MPa) in the gallery.

9.1.12 *Fuel-Injector Opening Pressure*, 1200 ± 100 psi (8.2 ± 0.69 MPa) for Bosch nozzle; 1450 ± 50 psi (9.9 ± 0.34 MPa) for Ex-Cell-O nozzle.

9.1.13 *Fuel Injector Timing*—The pump plunger must close the fuel-inlet port at 50 ± 5° after top dead center (atdc) on the intake stroke.

9.1.14 *Air pressure*, 54.4 ± 0.5 psi (0.37 ± 0.003 MPa) absolute at the upstream flange tap of the air-flow meter.

9.1.15 *Air Temperatures*, 125 ± 5°F (52 ± 3°C) in the

AVA Documents
Document Sharing Hub

Full document details: ASTM D909-00

downstream leg of the air-flow meter and 225 ± 5°F (107 ± 3°C) in the intake-manifold surge tank.

9.1.16 *Intake Air Humidity*, 70 (max) grains of water/lb (0.00997 kg of water/kg) of dry air.

9.1.17 *Standard Knock Intensity*, light knock as determined by ear. In determining the light knock point, it is advisable to adjust first to a fairly heavy knock by varying either the manifold pressure or the fuel flow, return to knock-free operation, and finally adjust to the light-knock conditions. Light-knock intensity is a level definitely above the commonly defined least audible "trace knock;" it is the least knock that the operator can definitely and repeatedly recognize by ear. Knock-intensity indicators (see A1.15 of Annex A1) may be used as an aid to the ear in obtaining standard knock intensity.

9.1.18 *Satisfactory Engine Condition*—The engine should cease firing instantly when the ignition is turned off. If it does not, operating conditions are unsatisfactory. Examine the engine for defects, particularly for combustion chamber and spark plug deposits, and remedy such conditions before rating fuels.[8]

10. Starting and Stopping the Engine

NOTE 1—For protection of both the operator and the equipment, careful study of Annex A3 on Operation should be made.

10.1 *Starting the Engine*—Turn on the cooling water. While the engine is being motored by the dynamometer, turn on the ignition, and then start fuel injection and adjust the fuel-air ratio for maximum power by means of the fuel control knob.

10.2 *Stopping the Engine*—Avoid valve warpage and unnecessary heat stress by operating the engine on unleaded fuel for several minutes at atmospheric manifold pressure or below. Prevent excessive washing of the cylinder walls by stopping the fuel injection before turning off the ignition. To avoid possible corrosion and warping, close both valves by turning the flywheel to top dead center on the compression stroke. Turn off the cooling water.

11. Standard Engine Performance

11.1 With the operating conditions of Section 9 established, it is necessary that the engine performance fall within the limits prescribed in 11.1.1 and 11.1.2. Unless the power curve and the mixture response curves for the reference fuels conform to these limits, the test unit is unsatisfactory for rating fuels and corrective steps are necessary.

11.1.1 *Power Curve*, for *iso*octane plus 6 mL of tetraethyl-lead per U.S. gallon must show a peak of 164.5 ± 3 imep by varying the fuel flow and using standard operating conditions at a constant manifold pressure of 40 in. Hg (135.4 kPa) absolute (see Fig. 2 and Fig. 3).

11.1.2 *Knock-Limited Power Curves*—At all fuel-air ratios between 0.08 and 0.12, the knock-limited power curves for the reference fuel blends shall conform within ±5 % imep to those shown in the reference fuel framework (see Fig. 4). This framework has been established for ASTM supercharge knock test units operating under properly standardized conditions. The imep spread between any two adjacent reference fuel curves as determined with the engine shall agree with the spread of the corresponding framework curves within ±30 % of the latter value.

12. Determination of Knock-Limited IMEP

12.1 Obtain the knock-limited imep of a fuel at any test point by operating the engine at the fuel-air ratio and manifold pressure required for standard knock intensity.

12.1.1 *Stabilization of Conditions*—After standard knock intensity has been obtained, it is necessary to stabilize engine temperatures. During this period minor adjustments of the manifold pressure and fuel flow may be required to maintain standard intensity.

12.1.2 *Observations*—When the conditions have been stabilized, record observations for determination of test results and control of engine operation. Brake and friction torques, and fuel- and air-flow rates are required for fuel ratings; coolant, oil, and intake-air temperatures, and oil and absolute manifold pressures are desirable as indications of operating conditions. To ensure that the test points are adequately defining the knock-limited power curve, plot the curve as the points are determined.

12.1.3 *Power Determination*—Engine power output is expressed as imep, which is defined as the sum of the brake and friction measurements. Determine brake torque at the stabilized knock condition from the scale reading of the power absorbing unit, and express it as brake mean effective pressure (bmep). Determine the torque required to motor the engine from the scale reading of the power absorbing unit after each brake torque determination by quickly stopping the fuel injection and motoring the engine. Read the friction torque and express it as friction mean effective pressure (fmep).

12.1.4 *Fuel-Air Ratio*—The ratio of the weights of fuel and air supplied to the engine during equal operating intervals is the fuel-air ratio. With the engine operating under the stabilized knock conditions, determine the fuel- and air-flow rates by observing the respective measuring devices. In practice, the air- and fuel-flow rates are recorded as minutes per 0.25 lb (0.11 kg) of air and minutes per 0.25 lb (0.11 kg) of fuel, thus allowing the calculation of fuel-air ratio directly from the data.

13. Rating a Sample

13.1 Obtain knock-limited power curves for the sample and two bracketing reference fuels as follows:

13.1.1 *Knock-Limited Power Curve for Sample*—Determine the knock-limited power curve for the sample from a series of knock-limited imep points established by the procedure and accompanied by the control observations outlined in 12.1.2. This curve corresponds to that of Fig. 5, determined by points 1 to 6. The knock-limited imep points should be distributed throughout a fuel-air ratio range from approximately 0.08 to 0.12 to define the knock-limited power curve. The following plan of testing, with the points determined in the order mentioned, has been found most satisfactory:

13.1.1.1 *Determine the First Point* on the knock-limited power curve at approximately 0.08 fuel-air ratio by adjusting the mixture control of the fuel pump at an arbitrarily selected manifold pressure until maximum brake torque is obtained. If

[8] Copies of this framework are avilable in pads of 50 8½by 11 in. data sheets from ASTM Headquarters. Request PCN ADJD090902.

AVA Documents
Document Sharing Hub

Full document details: ASTM D909-00

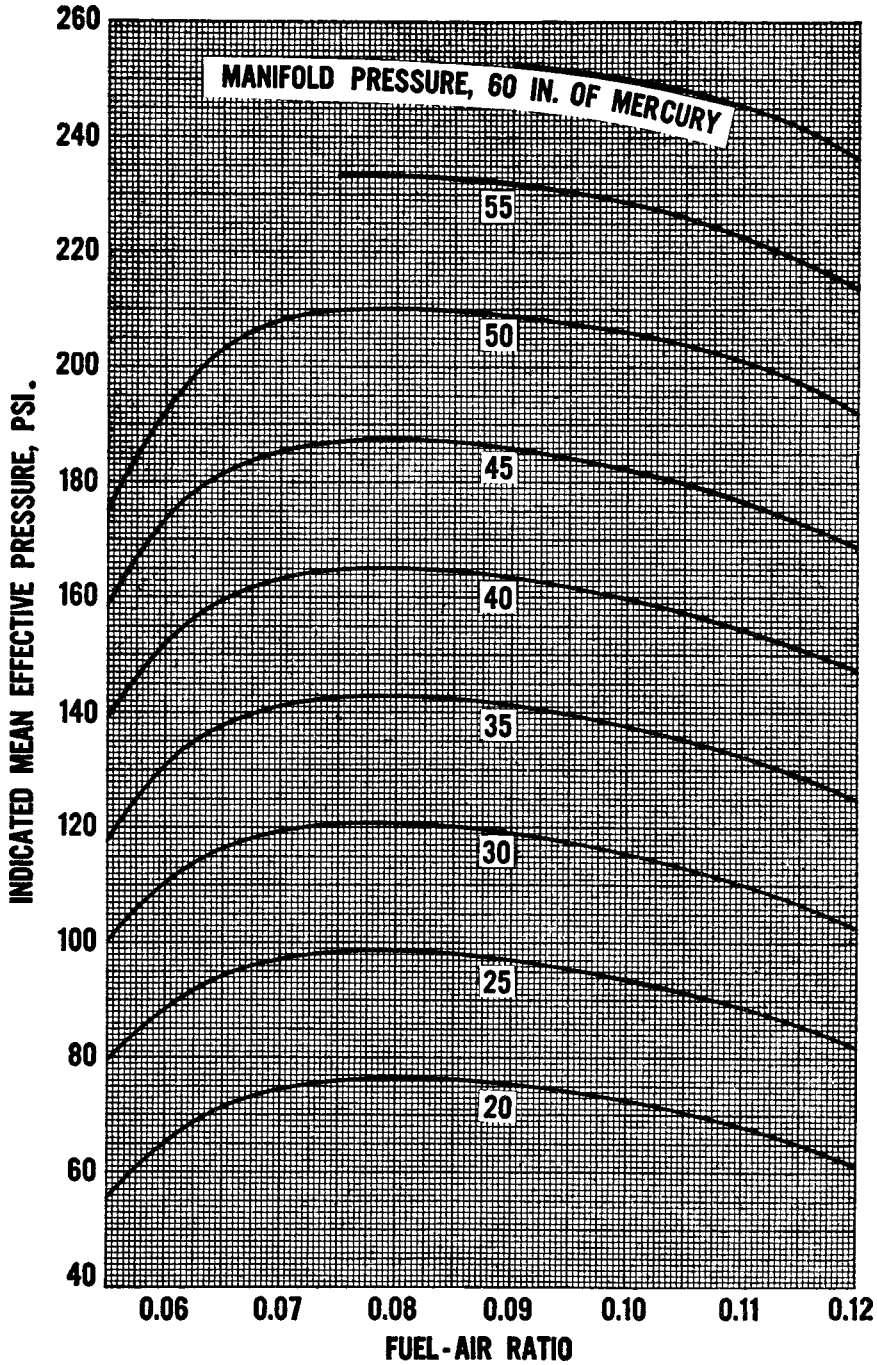

These Curves are for *Iso*octane plus 6.0 mL of Tetraethyllead per U.S. Gallon.

FIG. 2 Average Power Curves at Several Constant Manifold Pressures

knock occurs, reduce the manifold pressure and continue the adjustment of the fuel pump until a maximum brake torque is obtained without knock. Maintaining this setting, increase the manifold pressure until standard knock is obtained, checking as required in 9.1.17. When equilibrium has been reached, record the observations.

13.1.1.2 *To Determine Additional Points*, adjust the mixture control of the fuel pump to enrich the mixture and increase the manifold pressure by arbitrary increments (see Fig. 5, Points 2, 3). Following each change, slowly adjust the mixture until standard knock intensity is obtained, checking as required in 9.1.17. When equilibrium has been reached, record the observations. Near the peak of the knock-limited power curve (see Fig. 5, Points 4, 5, 6), it is more convenient to change the mixture control of the fuel pump by arbitrary increments and adjust the manifold pressure for standard knock intensity. When equilibrium has been reached, record the observations. At very rich mixtures make certain that the engine is firing regularly. At least six points are required to define the knock-limited power curve. Four should be on the rising portion of the

AVA Documents
Document Sharing Hub

Full document details: ASTM D909-00

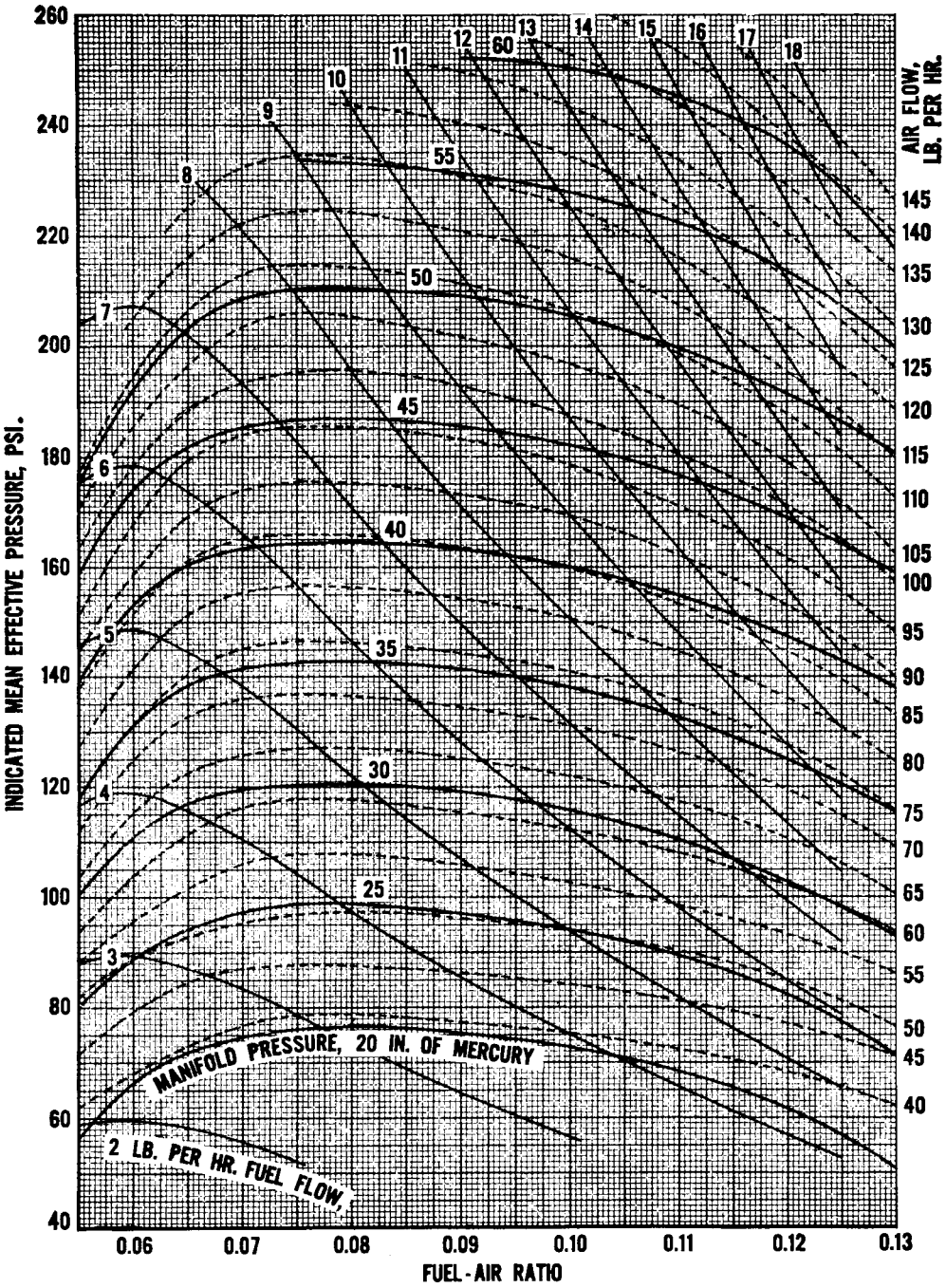

FIG. 3 Average Power, Fuel Flow, and Air Flow Curves at Several Constant Manifold Pressures

curve and two at richer mixtures to determine accurately the maximum imep and the fuel-air ratio at which it occurs.

13.1.2 *Knock-Limited Power Curves for Reference Fuels*—Immediately bracket the knock-limited power curve of the test sample by determining those for two *adjacent* blends of reference fuels selected from the following list:

ASTM *Iso*octane, vol %	ASTM *n*-Heptane, vol %	Tetraethyllead in *Iso*octane, mL/U.S. gal
85	15	...
90	10	...
95	5	...
100	...	...
100	...	0.5
100	...	1.25
100	...	2.0
100	...	3.0
100	...	4.0
100	...	6.0

AVA Documents
Document Sharing Hub

Full document details: ASTM D909-00

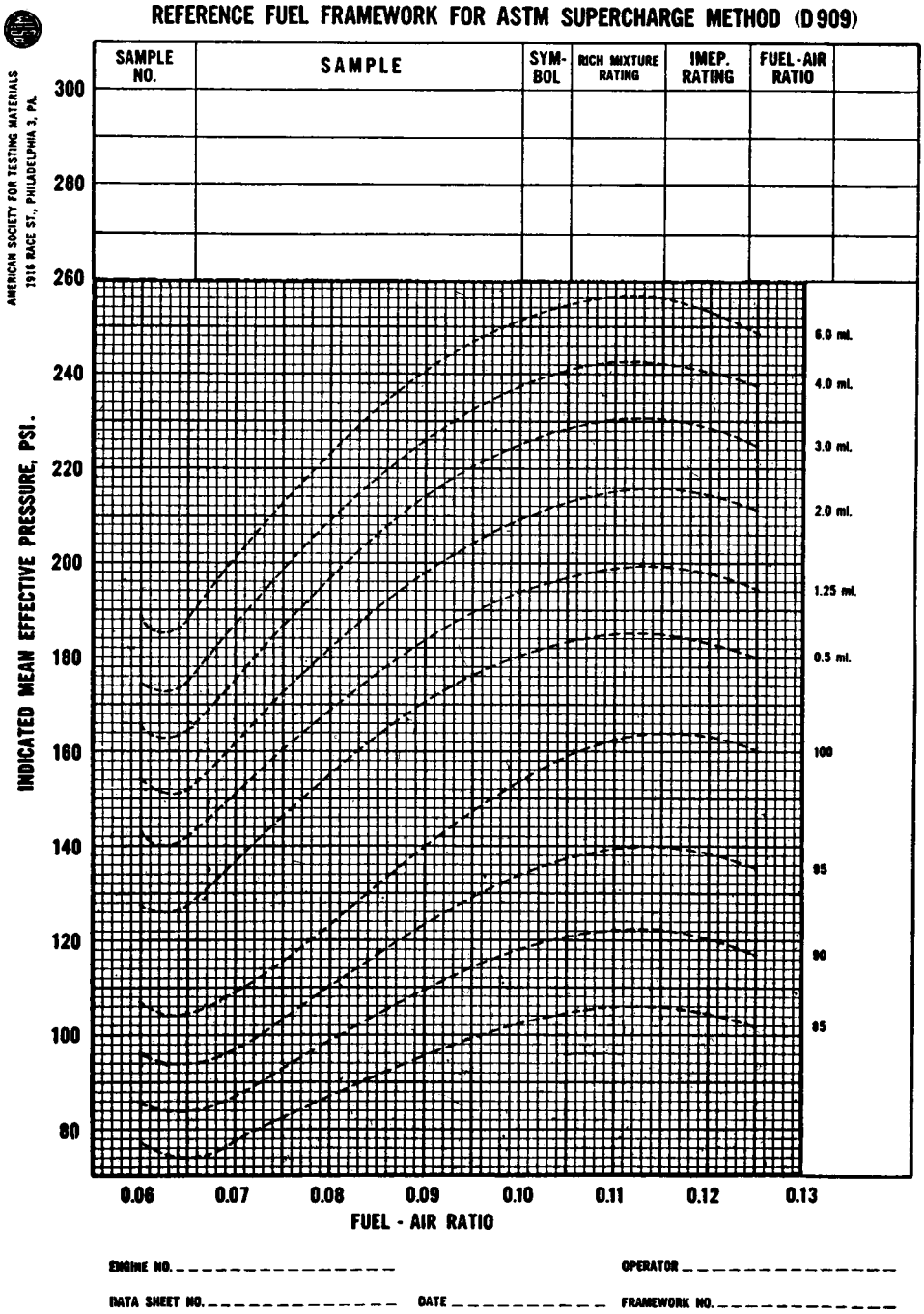

FIG. 4 Reference Fuel Framework[4]

Only these blends, prepared from the ASTM knock test reference fuels (see Section 8) may be used. The TEL content shall be determined by Test Method D 2599, D 3237, or D 3341.

14. Tests to Specified Rating

14.1 If a sample is being tested to ascertain whether it is equal to or better than a reference fuel, determine the knock-limited power curves of both fuels in accordance with the procedure outlined in 13.1.1 and plot them in the form of a graph such as that illustrated by Fig. 5. The sample passes this test if its knock-limited imep is equal to or greater than that of the reference fuel at the fuel-air ratio giving maximum knock-limited imep for the reference fuel.

15. Calculation and Report

15.1 Plot the knock-limited power curves for the sample and the bracketing reference fuels as a graph with fuel-air ratio as the abscissa and knock-limited imep as ordinate (see Fig. 4). The rating of the sample at any fuel-air ratio is that of the ASTM reference fuel which would result in the same imep when the engine is operated at standard knock intensity at the

Documents
Document Sharing Hub
Full document details: ASTM D909-00

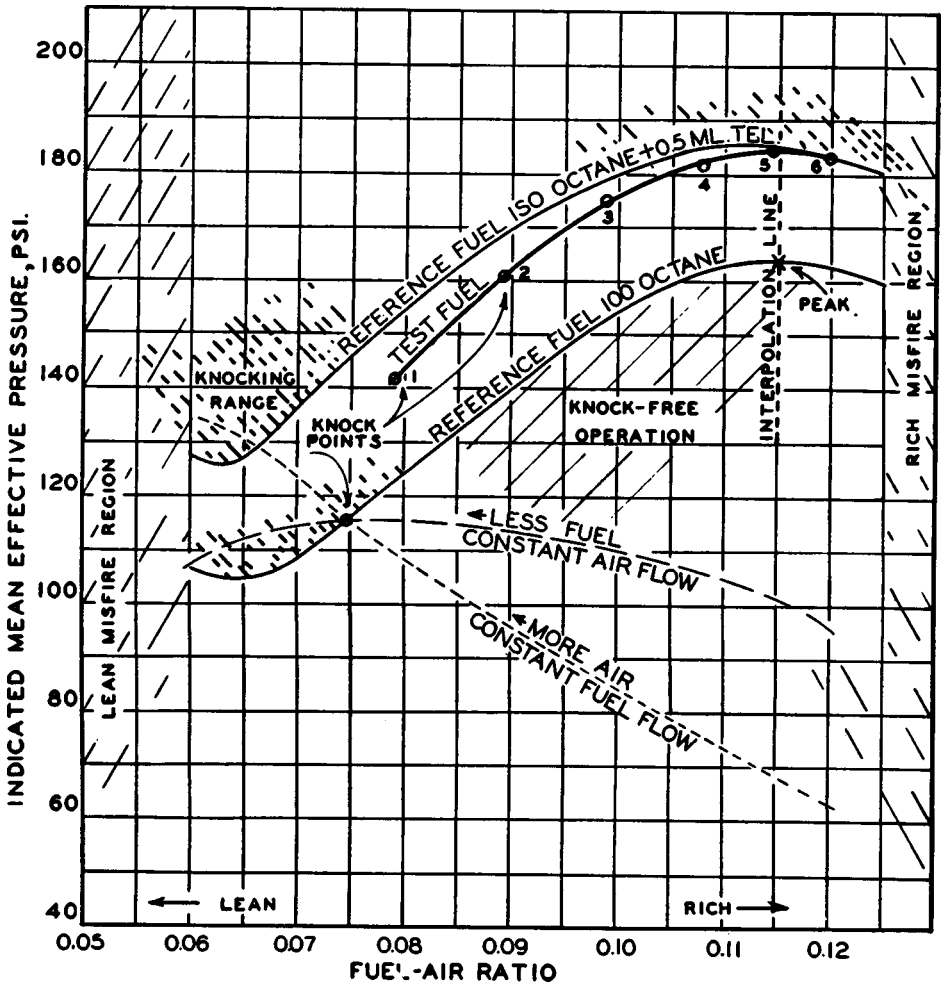

FIG. 5 Development of Knock-Limited Power Curves

same fuel-air ratio as the sample. Determine the ASTM supercharge rating of the sample by linear interpolation between the knock-limited imep values for the sample and the bracketing reference fuels at the fuel-air ratio for maximum knock-limited imep of the lower-bracketing reference fuel. When the curve for the sample is above that for the upper-bracketing reference fuel at the fuel-air ratio for the peak of the lower-bracketing reference fuel, make the interpolation by using the imep at the intersection of the curve for the sample and a straight line connecting the peaks of the bracketing reference fuel curves.

15.2 Report ratings below 100 octane number to the nearest integer. When the interpolated figure ends with 0.50, round to the nearest even number; report for example, 91.50 as 92, not 91.

15.3 Report ratings above 100 octane number in concentrations of TEL per U.S. gallon rounded to the nearest 0.01 mL TEL/gal. Convert these ratings to performance numbers using Table 2.

16. Precision and Bias

16.1 *Precision*:

16.1.1 *Repeatability*—In the range from 1.25 to 2.00 mL TEL/U.S. gal (129.6 to 138.4 performance number), the difference between two test results obtained by the same operator with the same engine under constant operating conditions on identical test specimens within the same day would, in the long run, in the normal and correct operation of the test method, exceed 0.145 mL TEL/U.S. gal in only one case in twenty. Since the relationship between mL TEL/U.S. gal and performance number is not linear, representative repeatability statistics in units of performance number are tabulated in Table 3.

16.1.2 *Reproducibility*—In the range from 1.25 to 2.00 mL TEL/U.S. gal (129.6 to 138.4 performance number), the difference between two single and independent test results

TABLE 3 Repeatability and Reproducibility Values

Supercharge Rating		Repeatability		Reproducibility	
ML TEL/US gal.	PN	ML TEL/US gal.	PN	ML TEL/US gal.	PN
1.25	129.6	0.14	2.0	0.23	3.2
1.30	130.2	0.14	1.9	0.26	3.6
1.40	131.6	0.14	1.8	0.32	4.2
1.50	132.9	0.14	1.7	0.39	5.0
1.60	134.1	0.14	1.7	0.48	5.6
1.70	135.2	0.14	1.6	0.57	6.6
1.80	136.3	0.14	1.5	0.68	7.3
1.90	137.4	0.14	1.5	0.80	8.2
2.00	138.4	0.14	1.3	0.93	9.2

AVA Documents
Document Sharing Hub

Full document details: ASTM D909-00

obtained by different operators in different laboratories on identical test specimens would, in the long run, in the normal and correct operation of the test method, exceed the value of R in only one case in twenty, where R is defined by the equation

$$R = 0.116x^3 \quad (1)$$

where

x = the average of the two test results in mL TEL/U.S. gal.

16.1.2.1 The reproducibility values in Table 3 exemplify the values of R over the applicable range. Since reproducibility varies with level and the relationship between mL TEL and performance number is not linear, reproducibility limits in units of performance number are also tabulated in Table 3.

16.1.3 *Interlaboratory Test Program*—The above precision statements are based on test results obtained by the ASTM Aviation National Exchange Group from 1988 to 1998. During this period, four aviation gasoline samples having supercharge ratings in the range from 1.25 to 2.00 mL TEL/U.S. gal were tested each year by 15–23 participating laboratories. A report of the data and analysis used to establish the precision statements is available as a research report.[9]

16.1.4 *Precision Below 1.25 mL TEL/U.S. Gal and Above 2.00 mL TEL/U.S. Gal*—There is not sufficient data to establish the precision of this test method for samples having supercharge ratings below 1.25 mL TEL/U.S. gal or above 2.00 mL TEL/U.S. gal.

16.2 **Bias**

16.2.1 This test method has no bias because the supercharge rating of aviation gasoline is defined only in terms of this test method.

[9] Available from ASTM Headquarters. Request RR:D02–1467.

ANNEXES

(Mandatory Information)

A1. APPARATUS

A1.1 APPARATUS

A1.1.1 The apparatus described in this annex is to be used without modification. It consists of a single cylinder engine and accessories mounted on a stationary base. It is equipped with controls for varying manifold pressure, fuel flow, and loading. Suitable instruments are provided for the measurement of these variables. The complete unit is known as the "ASTM-CFR Engine" and is marked by a plate or other approved means with a combination of the respective emblems of the American Society for Testing and Material and the Coordinating Fuel Research Committee, thus:

A1.1.2 At present the sole authorized manufacturer of the ASTM-CFR engine is the Waukesha Engine Div., Fuel Research Dept., Dresser Industries, Waukesha, Wis. 53186. Other manufacturers may be approved in the future, but testing laboratories should not purchase testing units, except from the Waukesha Engine Div., without ascertaining whether such units have been approved. Inquiries in this connection should be directed to Secretary, Committee D-2 on Petroleum Products and Lubricants, 2101 L Street, N.W., Washington, DC 20037.

A1.1.3 All necessary instruments and accessories are furnished with the unit. A parts list for ASTM-CFR engines can be obtained from the Waukesha Engine Div.

A1.1.4 Subsequent sections of this annex describe the specific units of the apparatus that are to be used. A summary of equipment for this test method appears in Table A1.1.

TABLE A1.1 Summary of Preferred Equipment for Supercharge Engine

Cylinder	variable compression
Valve gear	enclosed or open
Rocker arm bushing	needle
Intake valve	plain, with rotator
Exhaust valve	sodium cooled, with rotator
Valve felts	both valves
Piston	aluminum
Compression rings:	
Type	wedge
Number required	3
Oil control rings:	
Type	wedge
Number required	2
Crankcase	CFR-48
Rotating balance weights	CFR-48, light
Camshaft, deg overlap	30
Ignition	capacitor discharge
Spark plug (Champion):	
Type	M76R
Copper gasket	solid
Humidity control	compressed air
Fuel system	manifold injection
Pump timing	inlet port closes at 50 ± 5 deg atdc, inlet stroke
Injection pump:	8
Plunger diameter, mm	0.100 to 0.116
Lift at port closure, in	Bosch, ADNOSD 21
Injector	
Injector line	⅛
Bore, in	20 ± 2
Length, in	

A1.2 Cylinder Cooling System

A1.2.1 The evaporative cooling system is equipped with a flexible coolant return pipe and a water-cooled reflux condenser above the coolant level to provide sufficient cooling capacity. Ethylene glycol is used as the coolant. A diagram of the cooling system is shown in Fig. A1.1.

AVA Documents
Document Sharing Hub

Full document details: ASTM D909-00

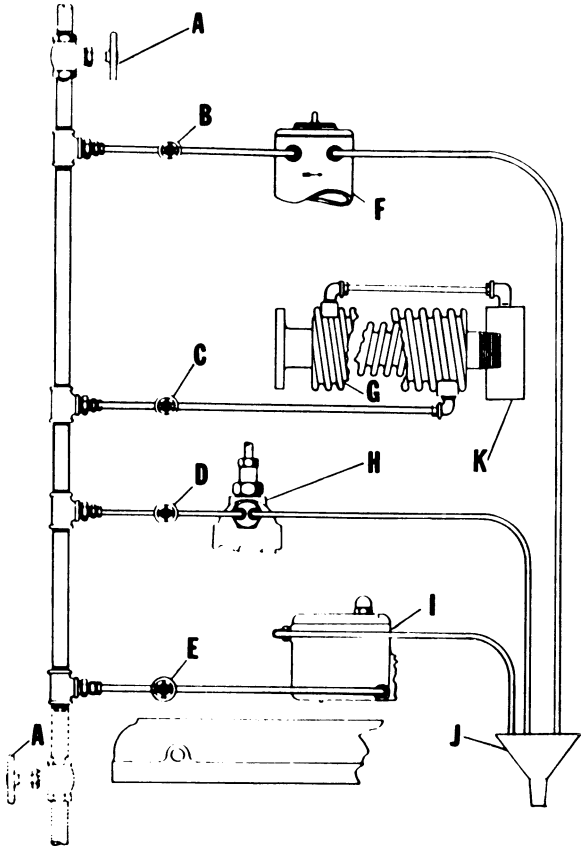

A—Optional Locations of Main Water Valve.
B—Control Valve to Condenser.
C—Control Valve to Exhaust Manifold.
D—Control Valve to Supercharge Fuel Cooler.
E—Control Valve to Oil Cooler.
F—Coolant Condenser.
G—Water Jacketed Exhaust Manifold.
H—Supercharge Fuel Injection Pump.
I—Oil Cooler.
J—Drain to Sewer.
K—Exhaust Spray Ring.

FIG. A1.1 Typical Diagram of Cooling System.

A1.3 Crankcase Ventilation

A1.3.1 The CFR-48 crankcase is equipped with lip-type oil seals and a breather valve.

A1.3.2 Crankcase ventilation is furnished by a breather valve at A, Fig. A1.2, on the left crankcase door. The breather valve assembly uses a hollow cup made of plastic which is installed open end downwards so that its lift is limited by the screw on the cap. The outlet is fitted for a ¾-in. pipe to conduct the crankcase vapors out of the laboratory and must not be connected to the engine exhaust. A condensation trap should be provided to prevent moisture from running back into the crankcase.

A1.4 Engine Specifications

A1.4.1 A single cylinder engine of continuously variable compression ratio is specified. Descriptive dimensions are listed in Table A1.2.

A1.5 Cylinder

A1.5.1 The cylinder is made in one piece integral with the cast-iron head, bored and honed, and has a Brinell hardness of 196 to 269. Cylinders of standard bore are preferred equipment, but rebored cylinders up to a maximum of 0.030 in. oversize may be used. *A micrometer*, suitably mounted, is used to measure the height of the cylinder with respect to the piston.

A1.6 Piston and Rings

A1.6.1 *Piston*—The five-ring, aluminum-alloy piston has a full floating hollow piston pin held in position by piston-pin retainers. Piston clearances are:

Top land	0.022 ± 0.002 in.
Intermediate lands	0.017 ± 0.002 in.
Skirt	0.011 ± 0.0005 in.

A1.6.2 *Rings*—Three wedge type compression rings and two wedge type oil control rings are required. The set consists of a chromium-plated top compression ring, two plain compression rings, and two narrow-faced oil control rings. When new, ring-gap clearances are 0.015 to 0.020 in. for the compression rings, and 0.010 to 0.018 in. for the oil rings.

A1.7 Valves and Valve Seats

A1.7.1 The intake valve (⅜-in. stem) is Stellite faced. The sodium-cooled exhaust valve (7⁄16-in. stem) is Eatonite faced. Both valve-seat inserts are made of solid Stellite.

A1.7.2 The standard face angle for values and inserts is 45°.

A1.8 Valve Guides, Springs, and Push Rods

A1.8.1 *Valve Guides*—The cast-iron alloy valve guides are heat treated and hardened. They are pressed into the cylinder with the shoulder on the guide not quite touching the cylinder to prevent distortion.

A1.8.2 *Valve Springs*—The valve springs are treated to resist corrosion.

A1.8.3 *Push Rods*—Push rods with lock-nut adjustments are used.

A1.9 Wiring Diagram

A1.9.1 The wiring diagram of the safety control, compensator, and heater circuits is shown in Fig. A1.3.

A1.10 Ignition System

A1.10.1 A coil ignition system is preferred. The Bendix CBR 4-1 magneto, shown in Fig. A1.4, may also be used. Type M76R spark plug manufactured by the Champion Spark Plug Co. is used with a solid copper gasket. A neon tube spark indicator is built into the engine.

A1.11 Exhaust System Components

A1.11.1 *Flexible Exhaust Pipe*—A water-cooled flexible exhaust pipe, 1¼-in. minimum internal diameter and about 18 in. (457 mm) long, must be used. The special flange and spacer shown in Fig. A1.5 is used for the connection to the surge tank. A quick-opening ¾-in. pipe valve may be installed in the flexible exhaust pipe, as shown, to check for resonance. If the indicated power is altered appreciably when the valve is opened, discharging the exhaust to the atmosphere, resonance is indicated and the system must be altered to correct it.

A1.11.2 *Water Spray*—Experience has shown that the use of water injection is advantageous. The brass ring for water injection is illustrated in Fig. A1.5. Water injection is accomplished by the brass spray plate bolted between the flanges of the

AVA Documents
Document Sharing Hub

Full document details: ASTM D909-00

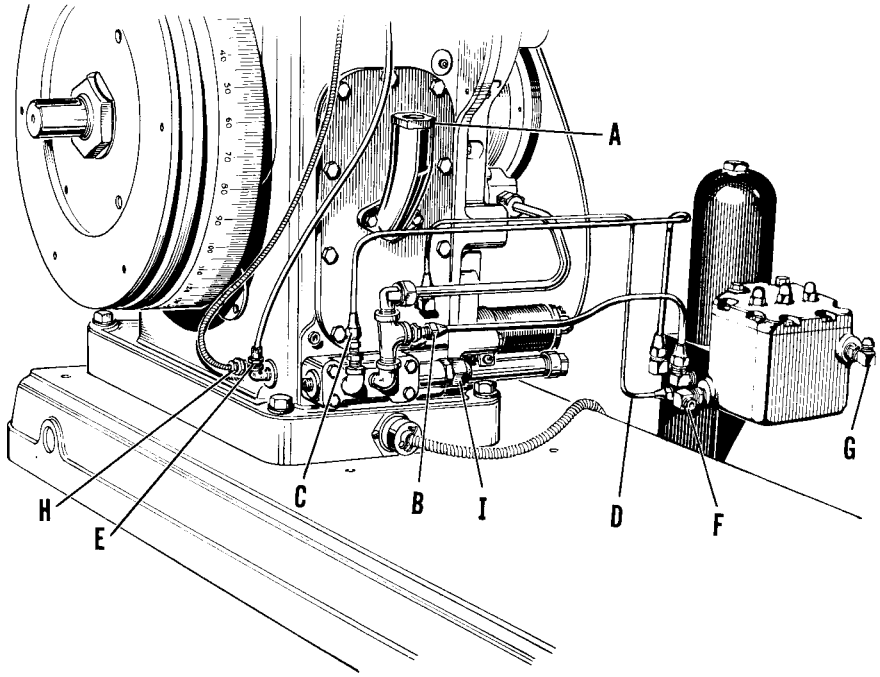

CFR-48 CRANKCASE

A—Breather.
B—Oil Line to Cooler—Filter.
C—Cooled Oil Return to Engine.
D—Filtered Oil Return to Engine.
E—Oil Pressure Gage Line.
F—Cooling Water Inlet.
G—Cooling Water Outlet.
H—Thermal Bulb of Oil Temperature Indicator.
I—Oil Pressure Adjustment.

FIG. A1.2 Lubrication System Connections for Engines Using By-Pass Type Oil Filter with Integral Cooler.

TABLE A1.2 Engine Specifications

	CFR-48	High-Speed Engine
Compression ratio	variable	variable
Standard bore, in	3.25	3.25
Stroke, in	4.50	4.50
Displacement, cu in	37.33	37.33
Valve seat insert, ID, in	1.187	1.187
Connecting-rod bearing:		
diameter, in	2.50	2.50
length, in	1.625	1.625
Front main bearing:		
diameter, in	3.00	2.50
length, in	2.50	2.25
Rear main bearing:		
diameter, in	3.00	2.50
length, in	3.031	4.906
Piston pin, floating, diameter, in	1.25	1.25
Connecting-rod, center-to-center, in	10.00	10.00
Timing-gear face, in	1.00	1.00
Piston rings, number	5	5
Valve ports, minimum diameter, in	1.25	1.25
Spark plug size, mm	18	18
Weight of engine (approx), lb	880	650
Weight of complete unit (approx) lb	4850	4650

flexible exhaust pipe and the surge tank inlet. Spray holes direct the water spray toward the centerline of the exhaust pipe and away from the engine.

A1.11.3 *Surge Tank*—The surge tank has a minimum inside diameter of 10 in. (254 mm), a minimum outside diameter of 10 ¾ in. (273 mm) and a minimum volume of 1 ft^3 (0.02 m^3), Fig. A1.6. It should be mounted horizontally, if possible, and rigidly supported to avoid strain on the flexible exhaust pipe which should slope downward from the engine about ¼in. A trap should be provided in all water drain lines.

A1.11.4 *Exhaust Back Pressure*—The exhaust back pressure at the surge tank should be as low as possible, but in no case should it be outside the limits of 0 to 10 in. (254 mm) of water.

A1.11.5 *Discharge Pipe*—To comply with A1.11.4, it is desirable to use a discharge pipe of 2-in. (50.8-mm) minimum diameter, 30 ft (9.14 m) maximum length, and containing no more than three elbows or other restrictions. It is desirable to have a separate exhaust system for each engine. If a discharge pipe is used for a multiple exhaust system, adequate capacity must be provided, so that the back pressure can be maintained within the limits set in A1.11.4.

A1.12 Fuel Supply System

A1.12.1 Fuel is injected into the intake elbow of the induction system by an injection pump and nozzle (see Fig. A1.7). The fuel-injection line is made of steel tubing having an inside diameter of 0.125 in. and length of 20 ± 2 in. (508± 50.8 mm). The injection pump is connected to the engine with a flexible drive coupling. A small circulating pump supplies fuel to the injection pump from the fuel container shown in Fig. A1.9. A system of valves in the supply and return lines, and a fuel weighing device (see Fig. A1.10), permit measurement of fuel consumption.

The entire fuel system is controlled at the panel board of the

AVA Documents
Document Sharing Hub

Full document details: ASTM D909-00

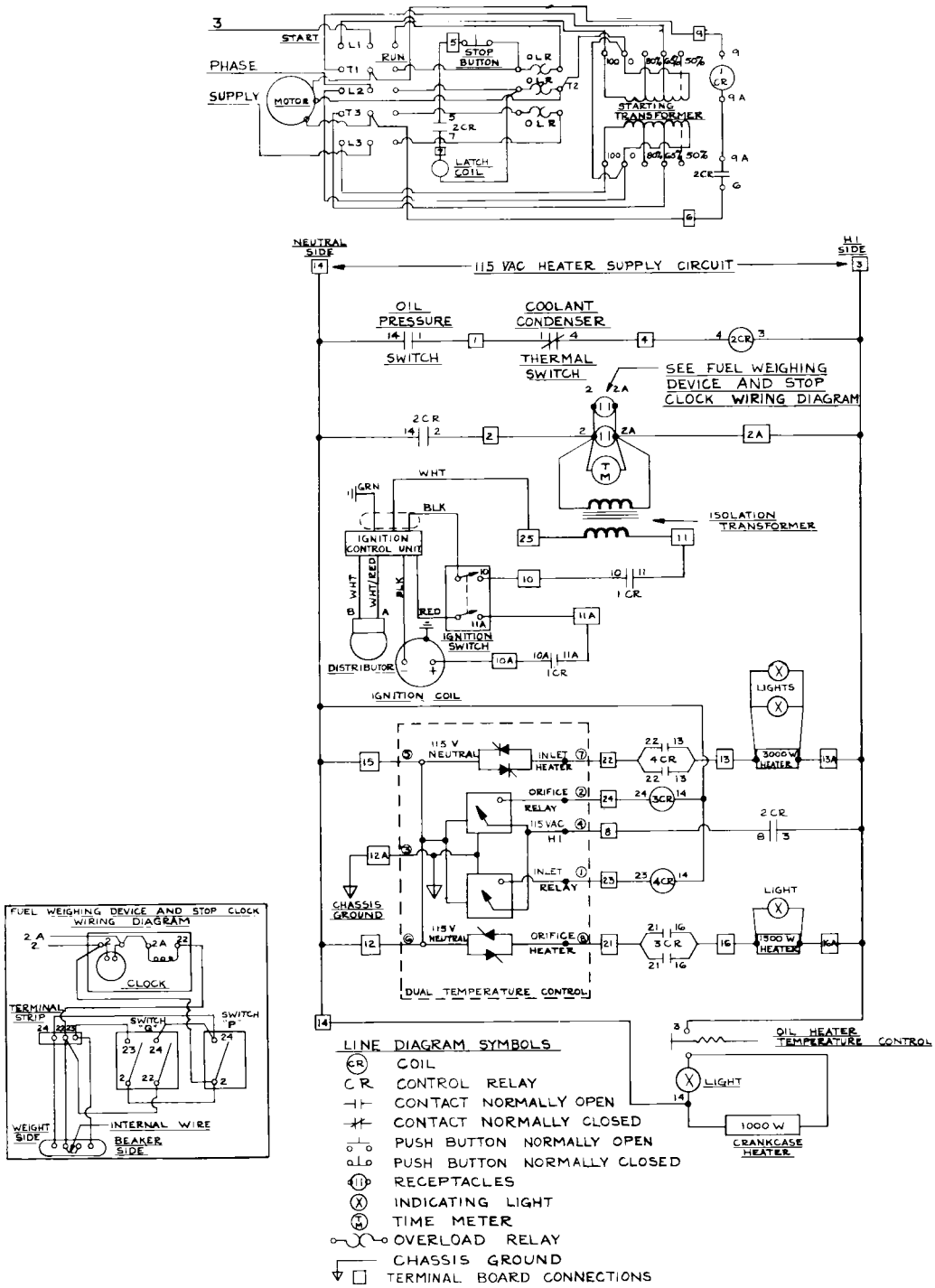

FIG. A1.3 Wiring Diagram for Supercharge Unit

engine, and involves manipulation of two three-way valves, two switches, and a weight lever for the fuel scales. Two filters protect the delicate parts of the fuel-injection pump, one of the edge type at the supply can, and the other a sintered bronze filter at the injection pump. A pump circulates SAE 30|☐ oil to lubricate the plunger of the injection pump.

A1.13 Intake Air Heaters

A1.13.1 Two thermostatically controlled heaters (1500 W and 3000 W) are used to preheat the air to the correct temperature before it enters the engine.

A thermometer having a range from 100 to 300°F (38 to 149°C) and graduated in 2°F (or 1°C) divisions, 85F or 85C in Table A1.3, is mounted in the surge tank as indicated by *DD*, Fig. A1.11.

A1.14 Air Induction System

A1.14.1 The air induction system is shown in Fig. A1.12. Air under pressure with a maximum of 70 grains of moisture per pound (0.00997 kg of water per kilogram) of dry air enters the induction system through filter *M* to eliminate entrained solids, and then passes through an auto-regulating valve *L*

AVA Documents
Document Sharing Hub

Full document details: ASTM D909-00

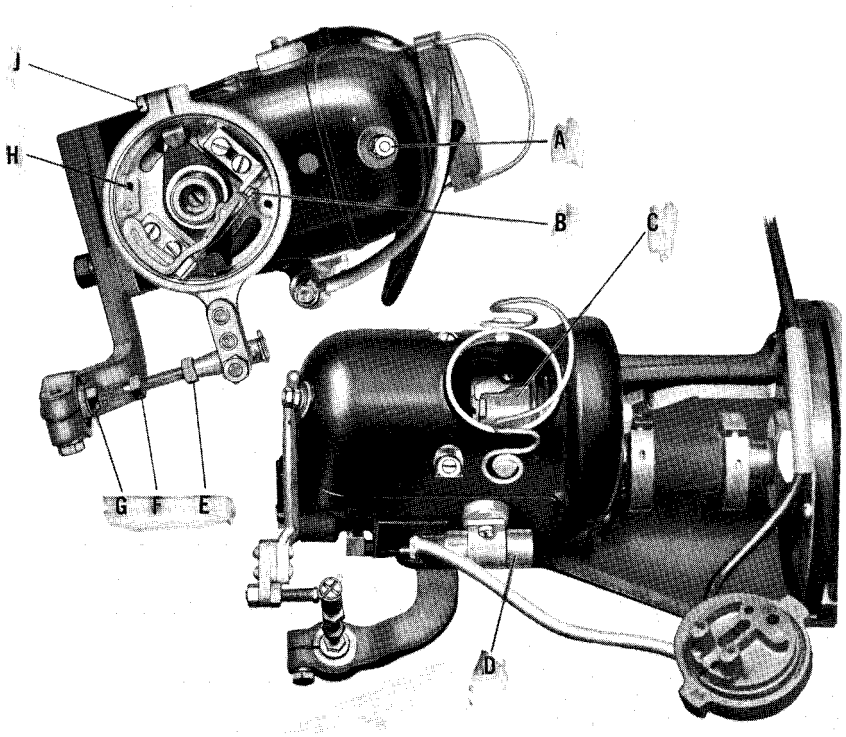

A—Ground wire terminal
B—Breaker points
C—Distributor
D—Resistor
E—Upper timing adjustment locknut
F—Timing adjustment screw
G—Lower timing adjustment locknut
H—Breaker point plate
J—Timing adjustor clamp screw

FIG. A1.4 Magneto

before entering the air flowmeter. This consists of an ASME sharp-edge orifice *G* in a flange mounting, connected to water manometer *F*. The manometer is calibrated in minutes per 0.25 lb of air thus simplifying calculation of fuel-air ratios. A typical calibration curve for air flow through the sharp-edged orifice is shown in Fig. A1.13.

Two tanks, one on each side of the flowmeter orifice *G*, Fig. A1.12, are used to reduce pulsation to a minimum. Air leaving the downstream tank passes through another pressure-regulating valve (see Fig. A1.14) before it enters the intake-manifold surge tank. This tank, *EE*, is used between the air inlet to the engine and the pressure regulating valve. The regulator and tank control the manifold pressures under which the engine operates. The tank is connected to the inlet of the engine by a bellows (see Fig. A1.15) surrounded by a guard. A100-in. mercury manometer *W* (see Fig. A1.12) measures the manifold or boost pressure. Both water and mercury manometers can be equipped with check valves as extra equipment to prevent water or mercury from being carried into the induction system.

A1.15 Detonation Meters

A1.15.1 An approved detonation meter may be used as an aid to the ear in determining standard knock intensity.Meters on the approved list are models KM-1, 102-A, and GPI-1. The KM-1 meter and the 102-A meter are both obsolete types not presently available. The GPI-1 meter is available from Waukesha Engine Div., Waukesha, Wis. It is considered an improved type as an aid to the ear in the determination of standard knock intensity.

A1.16 Pressure Lubrication

A1.16.1 *Lubrication Diagrams*—Pressure feed is used to lubricate the main bearings, connecting-rod bearings, piston pin, camshaft bearings, idler gear stud, balancer shaft bearings, and gears. A schematic lubrication diagram is shown in Fig. A1.16, and the oiling system external connections in Fig. A1.2. An oil-pressure–actuated safety switch is provided for protection of the air heaters.

A1.16.2 *Oil Filter*—The connections for the oil filter are shown in Fig. A1.2. On CFR-48 and high-speed crankcases there must *not* be a plug in the main passage inside the oil relief-valve body when using a by-pass filter alone, or the bearings will receive no oil. This plug, Item 36 in Fig. A1.17, is used only with the full-flow or combination cooler-filter unit to divert all the oil through the unit. Supercharge units require the oil cooler.

A1.16.3 *Oil Pump*— On the CFR-48 crankcase a gear-type pump is mounted externally on the gear cover, with external connecting lines.

A1.16.4 *Oil Heater*—A 1000-W electric heater is mounted on the base of the crankcase to provide rapid warmup.

A1.16.5 *Oil Temperature Indicator*—A thermometer in the

AVA Documents
Document Sharing Hub

Full document details: ASTM D909-00

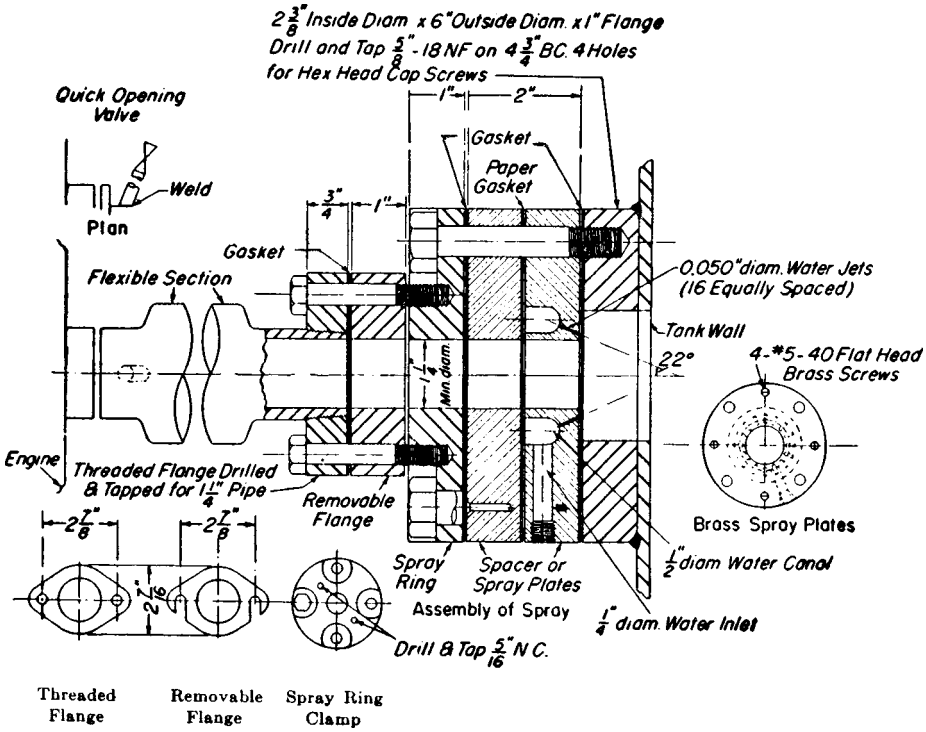

FIG. A1.5 Flexible Exhaust Pipe Assembly

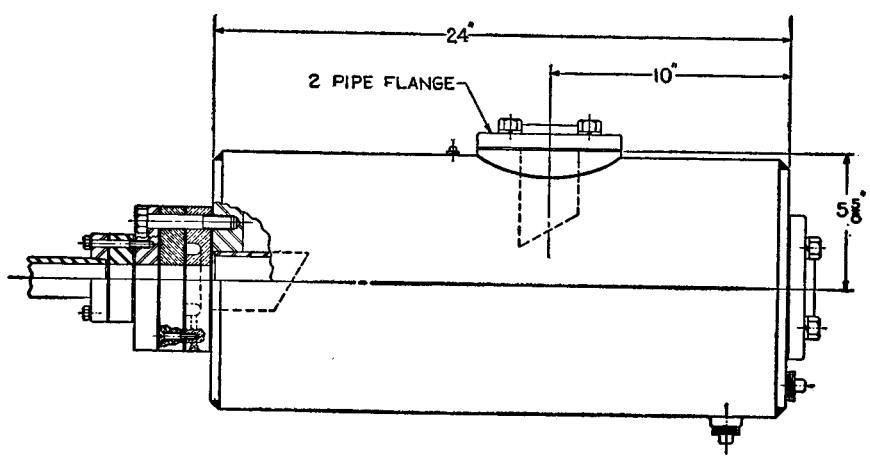

Tank to be lagged if water injection is not used.

FIG. A1.6 Exhaust System Surge Tank

housing of the lubricating-oil relief valve shows the temperature of the oil supplied to the main bearings. A gage on the panel shows oil-sump temperature.

A1.16.6 *Pressure Gage*—An oil pressure gage having a range from 0 to 100 psi (0 to 0.69 MPa) is used.

A1.16.7 *Valve Stem Lubrication*—Positive pressure lubrication to the rocker arms is provided. Felt washers are used on the valve stems. A valve and rocker arm cover (see Fig. A1.18) ensures an oil mist around the valves.

A1.16.8 *Oil Pressure*—The oil relief valve is set by means of adjusting screw *I* (see Fig. A1.2) to maintain an oil pressure of 60 psi (0.41 MPa) (see A4.30).

A1.17 Shafts, Rods, and Crankcase

A1.17.1 *Camshaft*—The camshaft has a valve lift of 0.312 in. It is a case-hardened forging.

A1.17.2 *Connecting Rod*—The connecting rod is fitted with a replaceable precision-type bearing. It is made of heat-treated steel, of channel section for maximum rigidity. The rod is rifle-drilled for forced-feed lubrication of the piston pin and spray cooling of the under side of the piston. The big-end bearing is removable and is of the precision type.

A1.17.3 *Crankcase*—Only the CFR-48 and high-speed engines are used. Sectional views of the CFR-48 engine are shown in Fig. A1.20 and Fig. A1.21.

A1.17.4 *Crankshaft*—The crankshaft is forged, fully machined, counterbalanced, heat-treated, and nitrided. It is drilled for full-pressure lubrication to the connecting rod.

A1.17.5 *Main Bearings*—The CFR-48 crankcase is

AVA Documents
Document Sharing Hub

Full document details: ASTM D909-00

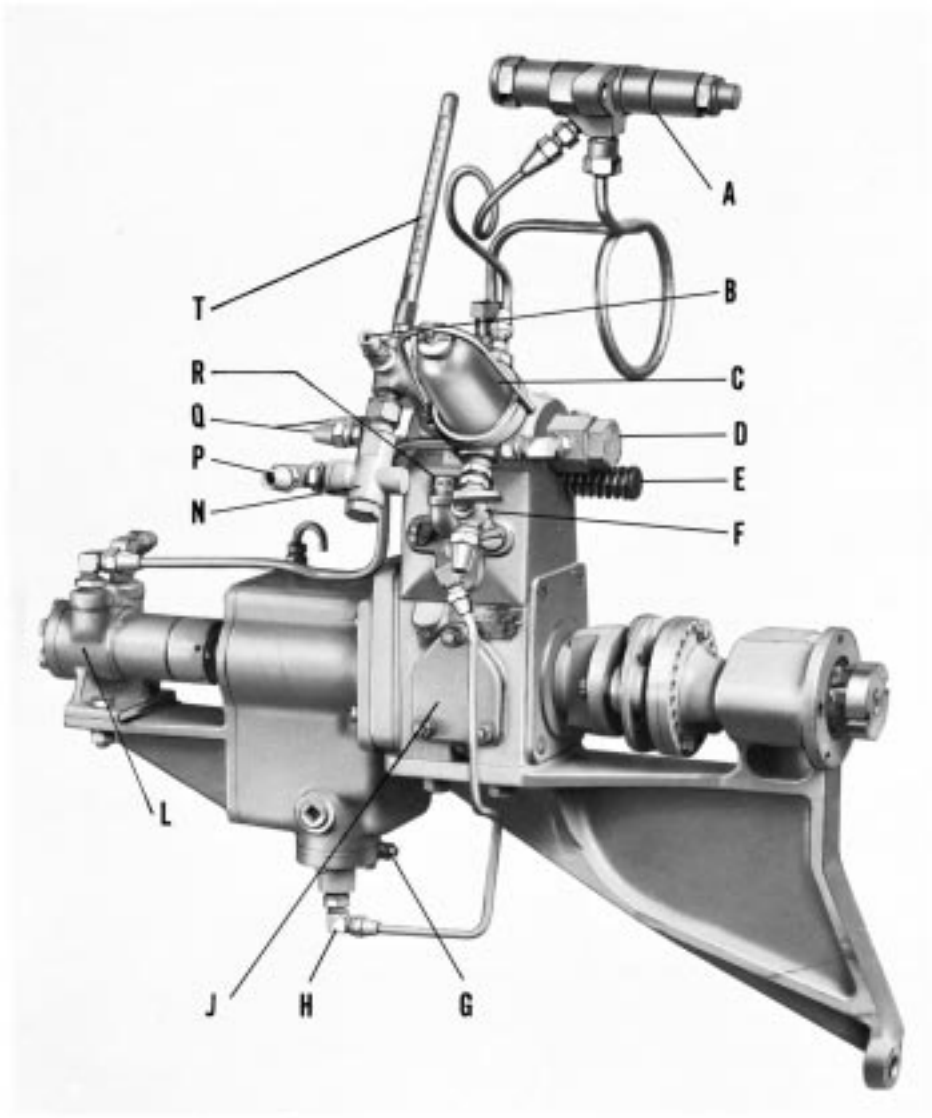

(*a*) FRONT VIEW

A—Injection nozzle
B—Connection for fuel pressure gage
C—Surge dampener
D—Fuel filter
E—Fuel control rack
F—Air bleed
G—Oil drain cock of fuel pump reservoir
H—Oil line of fuel pump
J—Provision for mounting Bosch fuel pump

FIG. A1.7 Fuel Injection System

equipped with sleeve-type precision bearings which are easily replaced without requiring line reaming.

A1.17.6 *Balancing*—On the CFR-48 crankshaft, the crankpin and the big-end mass of the connecting rod are balanced by counterweights bolted to the crank cheeks. The primary reciprocating mass is balanced by rotating weights mounted on the two balancer shafts rotating in opposite directions. The weights on the balancer shafts are designed to match the piston-assembly weights. The solid steel weights without lead plugs must be used to balance the aluminum piston.

A1.18 Dynamometer

A1.18.1 A 25-hp alternating-current electric dynamometer, capable of maintaining an engine speed of 1800 ± 45 rpm, starts the engine and absorbs the power developed by it. The 60-Hz dynamometer is connected to the engine by two flexible couplings and is of the cradle type, power being measured by the pull exerted on a springless dial scale. Oil dashpots on both

AVA Documents
Document Sharing Hub
Full document details: ASTM D909-00

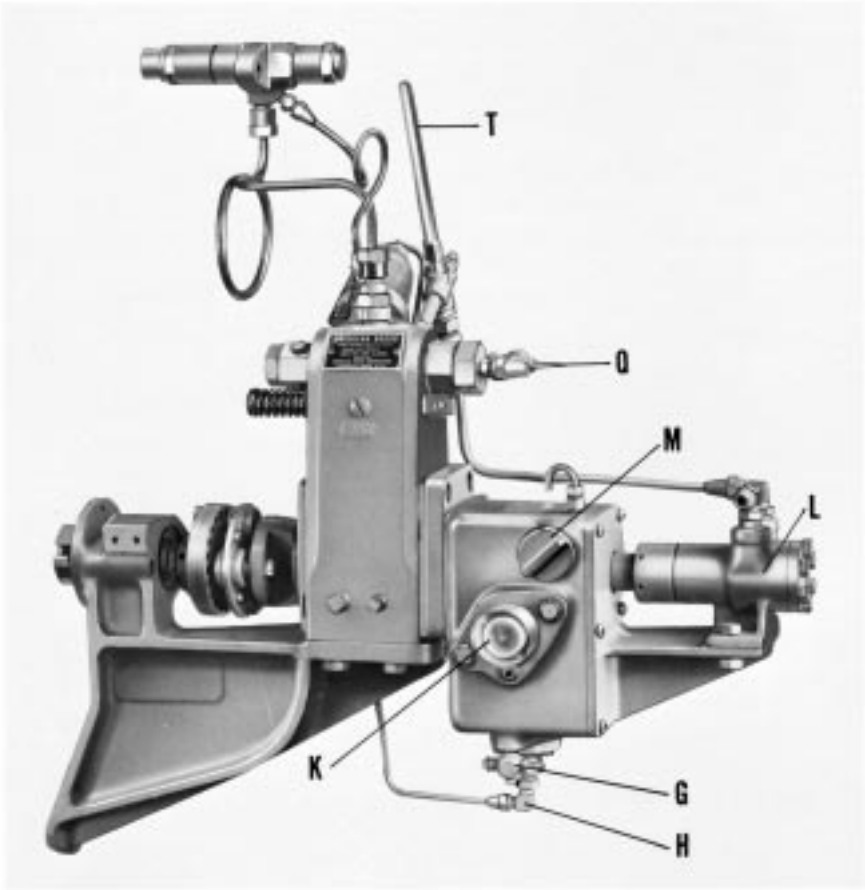

(*b*) REAR VIEW

K—Oil level Window
L—Fuel pump, rotary type
M—Oil filter cap
N—Fuel relief valve
O—Fuel control rack
P—Connection for fuel return line
Q—Water connections for fuel cooler
R—Oil line of fuel pump breather
T—Provision for mounting Bosch fuel pump

FIG. A1.7 *(continued)*

scale *G* (see Fig. A1.22) and dynamometer *B* (see Fig. A1.23) damp the power pulsations, thus reducing fluctuations of the scale pointer. The 50-Hz dynamometer is belted by three V-belts, using a special flywheel pulley.

A1.18.2 The piston clearance of the dynamometer dashpot is 0.019 ± 0.001 in. The piston operates in an oil having a Saybolt Universal viscosity of 290 s at 80°F. Backlash of the linkage between the scale and dynamometer, when shifting from motoring to power absorption, is eliminated by two independent links and pre-loading of the scale. To simplify calculations, the scale is calibrated in mean effective pressure (mep). Details of the dynamometer scale head are shown in Fig. A1.24.

Documents
Document Sharing Hub
Full document details: ASTM D909-00

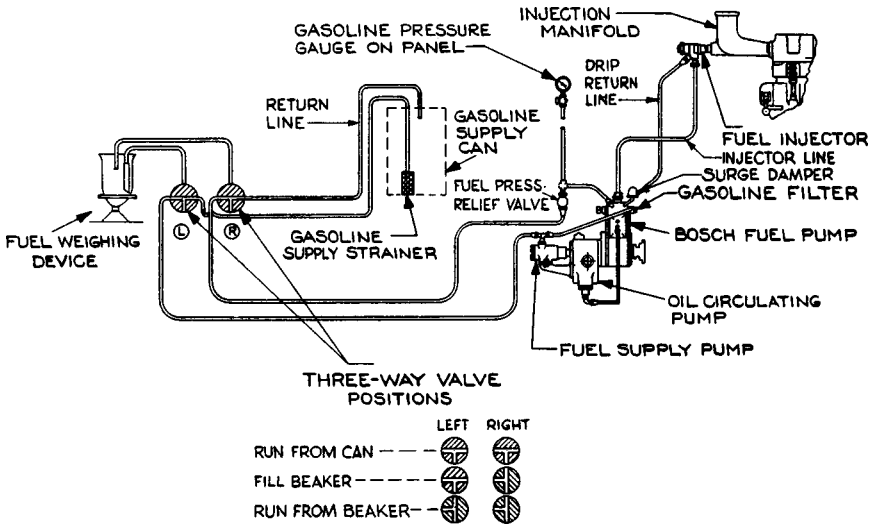

FIG. A1.9 Diagram of Fuel System

Documents
Document Sharing Hub
Full document details: ASTM D909-00

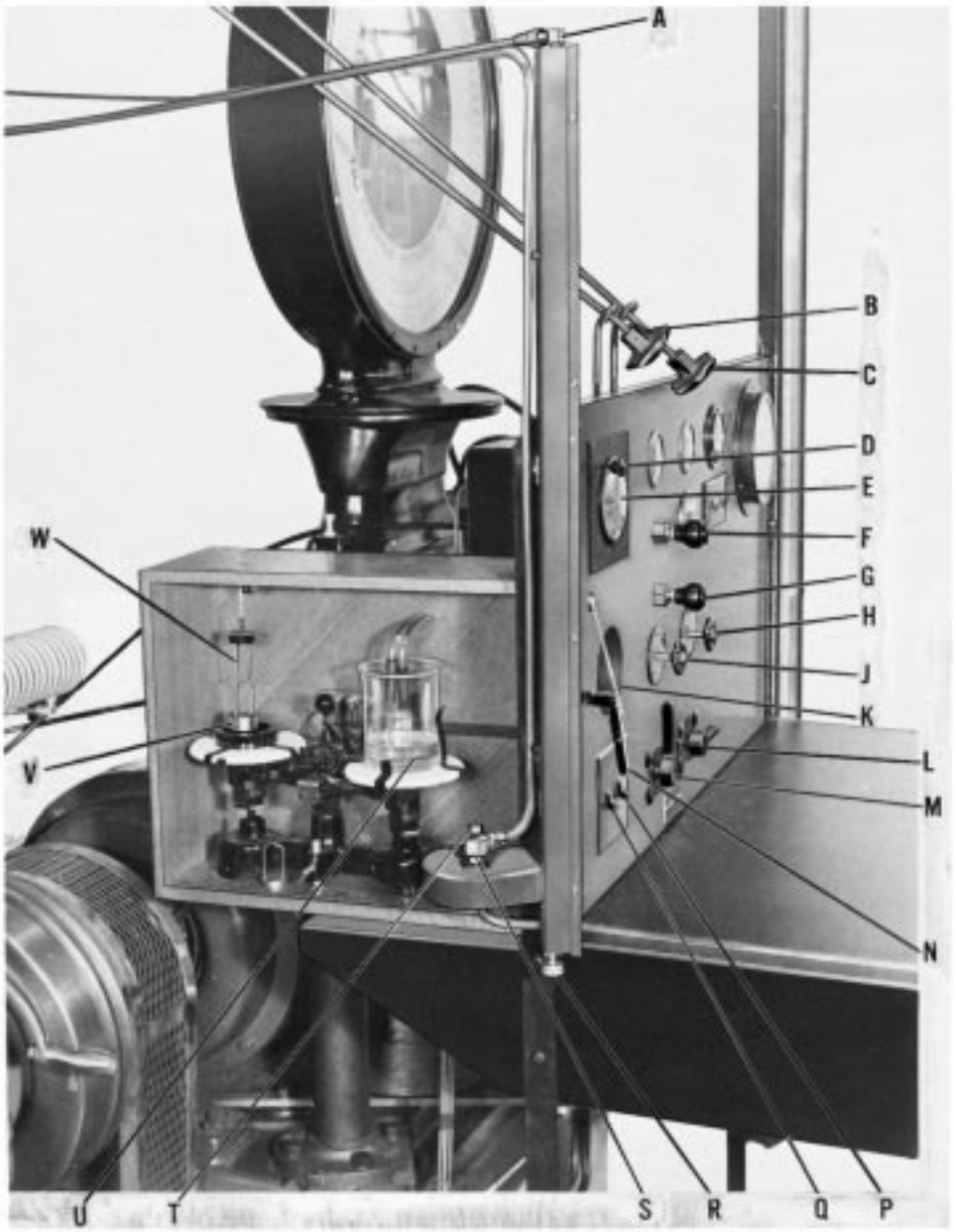

A—Water manometer connection to orifice
B—Control knob for atmospheric bleed valve
C—Control knob for air adjusting valve
D—Stop clock reset
E—Stop clock
F—Control knob for fuel shutoff
G—Control knob for fuel injection
H—Air bleed valve for adjusting orifice pressure valve
J—Air pressure valve for adjusting orifice pressure valve
K—Fuel scales observation window
L—Right hand fuel valve
M—Left-hand fuel valve
N—Lever for setting scale weights
P—Right-hand control switch for stop clock
Q—Left-hand control switch for stop clock
R—Zero adjustment for water manometer
S—Water manometer connection to orifice
T—Water manometer filler plug
U—Fuel weighing beaker
V—Special fuel weight
W—Hook for lifting scale weight

FIG. A1.10 Fuel Weighing Device and Controls

Documents
Document Sharing Hub

Full document details: ASTM D909-00

TABLE A1.3 Specifications for ASTM Thermometers for Supercharge Method[A,B,C]

	ASTM No.	82F-80	82C-80	84F-80	84C-80	85F-80	85C-80	87F-80	87C-80
	IP No.								
	Name	Fuel Rating, Engine		Fuel Rating, Orifice Tank		Fuel Rating, Surge		Fuel Rating, Coolant	
	Reference Fig. No.	11		11		11		8	
	Range	0 to 220°F	−15 to 105°C	75 to 175°F	25 to 80°C	100 to 300°F	40 to 150°C	300 to 400°F	150 to 205°C
	For test at			125°F[D]	51.7°C[D]	225°F[D]	107.2°C[D]	375°F[D]	190.6°C[D]
A	Immersion, mm	30[E]		249[E]		181[E]		40[E]	
	Graduations:								
	Subdivisions	2°F	1°C	1°F	1°C	2°F	1°C	1°F	1°C
	Long lines at each	10°F	5°C	5°F	5°C	10°F	5°C	5°F	5°C
	Numbers at each	20°F	10°C	10°F	10°C	20°F	10°C	10°F	10°C
	Scale error, max	2°F	1°C	2°F	1°C	2°F	1°C	2°F	1°C
	Special inscription	ASTM 82F or 82C 30 mm IMM		ASTM 84F or 84C 249 mm IMM		ASTM 85F or 85C 181 mm IMM		ASTM 87F or 87C 40 mm IMM	
	Expansion chamber:								
	Permit heating to	260°F	125°C	215°F	100°C	340°F	170°C	440°F	225°C
B	Total length, mm	159 to 165		378 to 387		305 to 314		169 to 175	
C	Stem OD, mm	6.0 to 7.0		6.0 to 7.0		6.0 to 7.0		6.0 to 7.0	
D	Bulb length, mm	6 to 11		6 to 11		6 to 11		6 to 11	
E	Bulb OD, mm	5.0 to 6.5		5.0 to 6.5		5.0 to 6.5		5.0 to 6.5	
	Scale location:								
	Bottom of bulb to line at	0°F	−15°C	75°F	25°C	100°F	40°C	300°F	150°C
F	Distance, mm	62 to 70		284 to 292		213 to 221		72 to 80	
G	Length of graduated portion, mm	65 to 81		62 to 79		54 to 77		59 to 82	
	Ice-point scale:								
	Range								
H	Bottom of bulb to ice-point, mm								
	Contraction chamber:								
I	Distance to bottom, min, mm							21	
J	Distance to top, max, mm								
	Stem enlargement:								
K	OD, mm	8.0 to 9.0		8.0 to 9.0		8.0 to 9.0		8.0 to 9.0	
L	Length, mm								
M	Distance to bottom, mm	28 to 32		247 to 251		179 to 183		38 to 42	

[A] These specifications have been reproduced from Specification E 1.

[B] Both types of these thermometers, Fahrenheit and Celsius, are standard equipment; however, the Fahrenheit thermometers have been designated“ preferred.” The only significance of this designation is that they will be supplied on all orders unless otherwise specified.

[C] Celsius thermometers are not currently available.

[D] The test temperature shall be indicated by an arrow whether the graduation corresponding to that point is numbered or not.

[E] Immersion line shall be omitted.

Documents
Document Sharing Hub

Full document details: ASTM D909-00

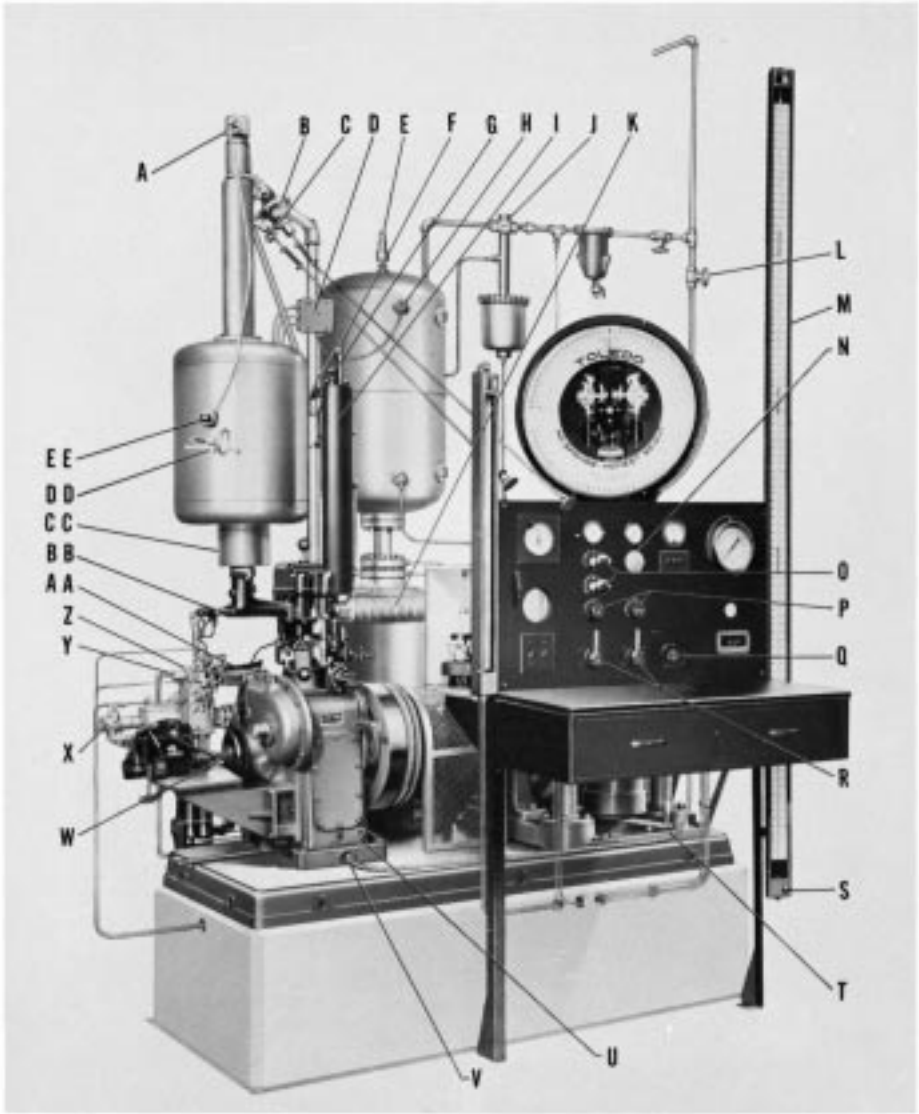

A—3000-W heater
B—Manifold pressure regulating valve
C—Atmospheric bleed valve
D—Main junction box
E—Safety relief valve
F—Coolant safety shutoff thermostat
G—Coolant condenser filler cap
H—Orifice tank heater thermostat
I—Coolant condenser
J—Orifice pressure regulating valve
K—Water cooled exhaust manifold
L—Air supply blow-off valve
M—Mercury manometer for manifold pressure
N—Ignition switch
O—Fuel injection pump controls
P—High pressure air control valves
Q—Oil heater switch
R—Fuel supply valves
S—Adjustment for barometeric pressure
T—Dynamometer locking handle
U—Oil level sight gage
V—Oil heater plug
W—Spark quadrant
X—Fuel supply pump
Y—Fuel cooler
Z—Fuel injection pump
AA—Fuel control quadrant
BB—Fuel injector in manifold
CC—Bellows guard on surge tank
DD—Surge tank thermometer and magnifying glass
EE—Surge tank thermostat

FIG. A1.11 Operating View of 60-Hz Supercharge Unit

Documents
Document Sharing Hub

Full document details: ASTM D909-00

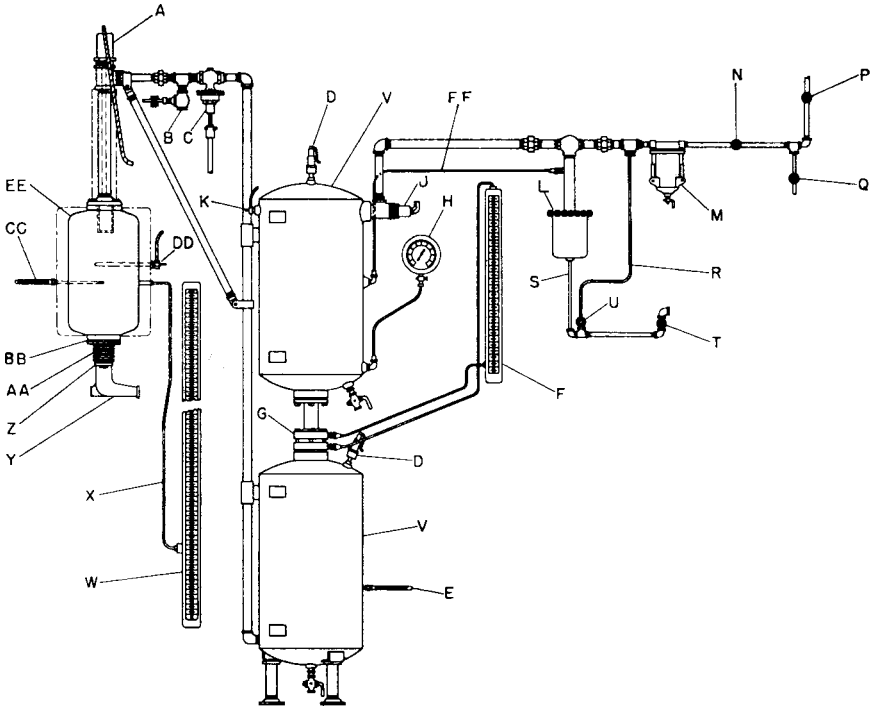

A—Surge Tank Heater.
B—Atmospheric Bleed Valve.
C—Air Adjusting Valve.
D—Safety Valve.
E—Orifice Air Thermometer.
F—Water Manometer.
G—Calibrated Orifice.
H—Air Pressure Gage on Control Panel.
J—Air Heater.
K—Air Heater Thermostat.
L—Orifice Pressure Control Valve.
M—Air Filter.
N—Air Supply Valve.
P—Main Air Supply Valve.
Q—Condensate Bleed Valve.
R—Pressure Line to Control Panel.
S—Pressure Line from Panel.
T—Air Bleed Valve on Panel for Adjusting Orifice Pressure Valve.
U—Air Pressure Valve on Panel for Adjusting Orifice Pressure Valve.
V—Orifice Air Tank.
W—Mercury Manometer, Manifold Pressure.
X—Line from Surge Tank to Mercury Manometer.
Y—Intake Manifold.
Z—Manifold Flange.
AA—Bellows.
BB—Air Tank Flange.
CC—Intake Surge Tank Thermometer.
DD—Thermostat.
EE—Intake Surge Tank.
FF—Balance Line for Orifice Pressure Regulator.

FIG. A1.12 Diagram of Induction System with Vertical Air Tanks

Documents
Document Sharing Hub
Full document details: ASTM D909-00

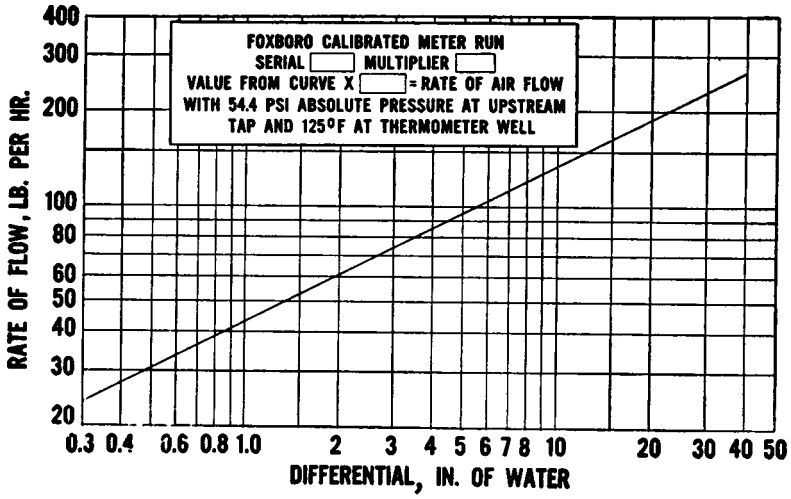

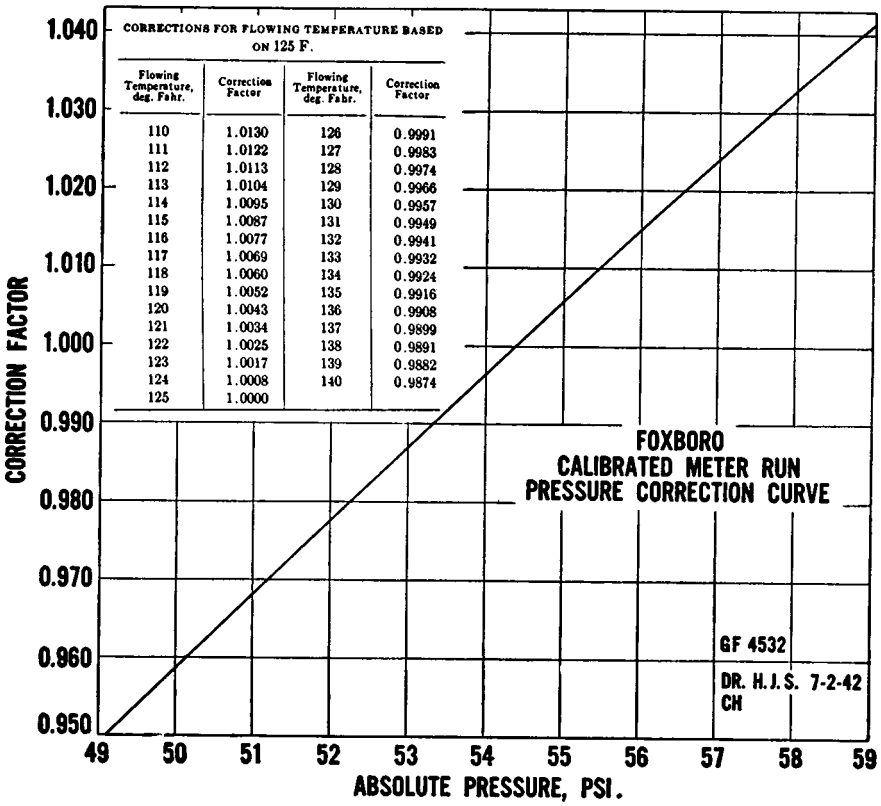

Flowing Temperature, deg. Fahr.	Correction Factor	Flowing Temperature, deg. Fahr.	Correction Factor
110	1.0130	126	0.9991
111	1.0122	127	0.9983
112	1.0113	128	0.9974
113	1.0104	129	0.9966
114	1.0095	130	0.9957
115	1.0087	131	0.9949
116	1.0077	132	0.9941
117	1.0069	133	0.9932
118	1.0060	134	0.9924
119	1.0052	135	0.9916
120	1.0043	136	0.9908
121	1.0034	137	0.9899
122	1.0025	138	0.9891
123	1.0017	139	0.9882
124	1.0008	140	0.9874
125	1.0000		

FIG. A1.13 Typical Foxboro Orifice Calibration Chart. (Not to Be Used for Calibration Purposes)

Documents
Document Sharing Hub
Full document details: ASTM D909-00

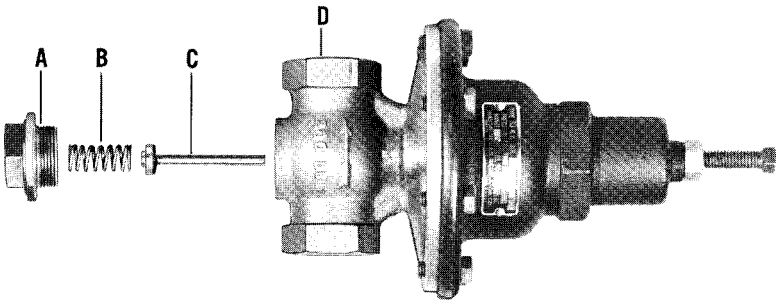

A—Cap Nut
B—Valve spring
C—Valve plunger and guide
D—Valve body

FIG. A1.14 Air Adjusting Valve

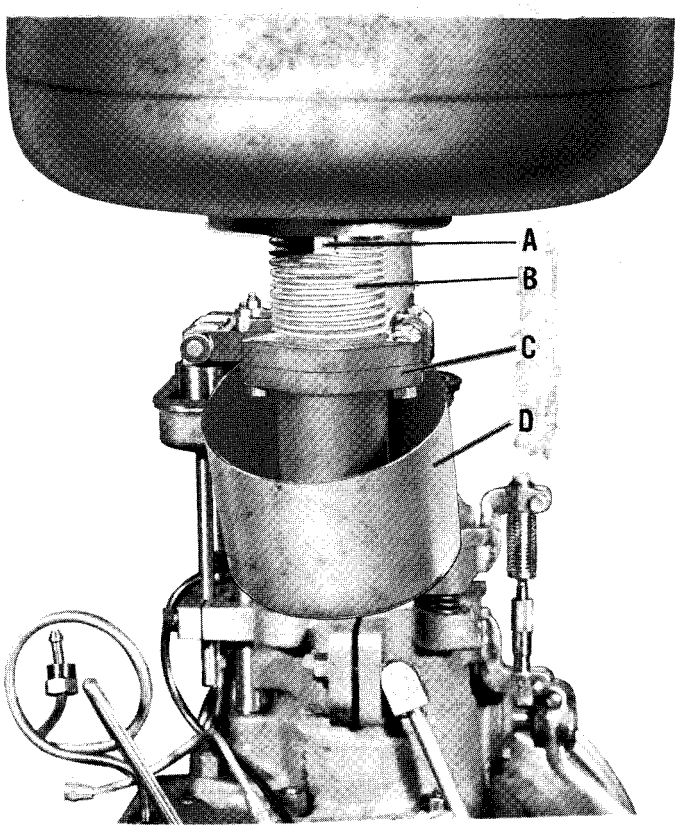

A—Capscrew
B—Bellows
C—Intake manifold flange
D—Bellows guard

FIG. A1.15 Surge Tank Bellows

Documents
Document Sharing Hub
Full document details: ASTM D909-00

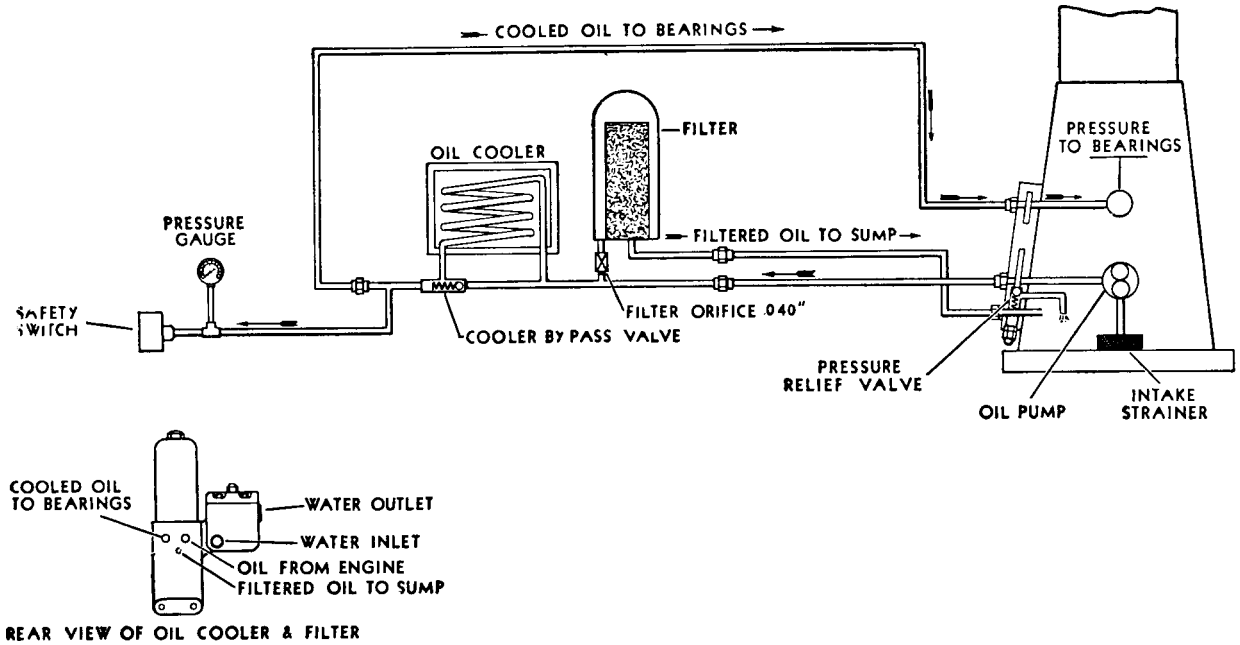

FIG. A1.16 Diagram of Lubrication System with By-Pass Type Filter

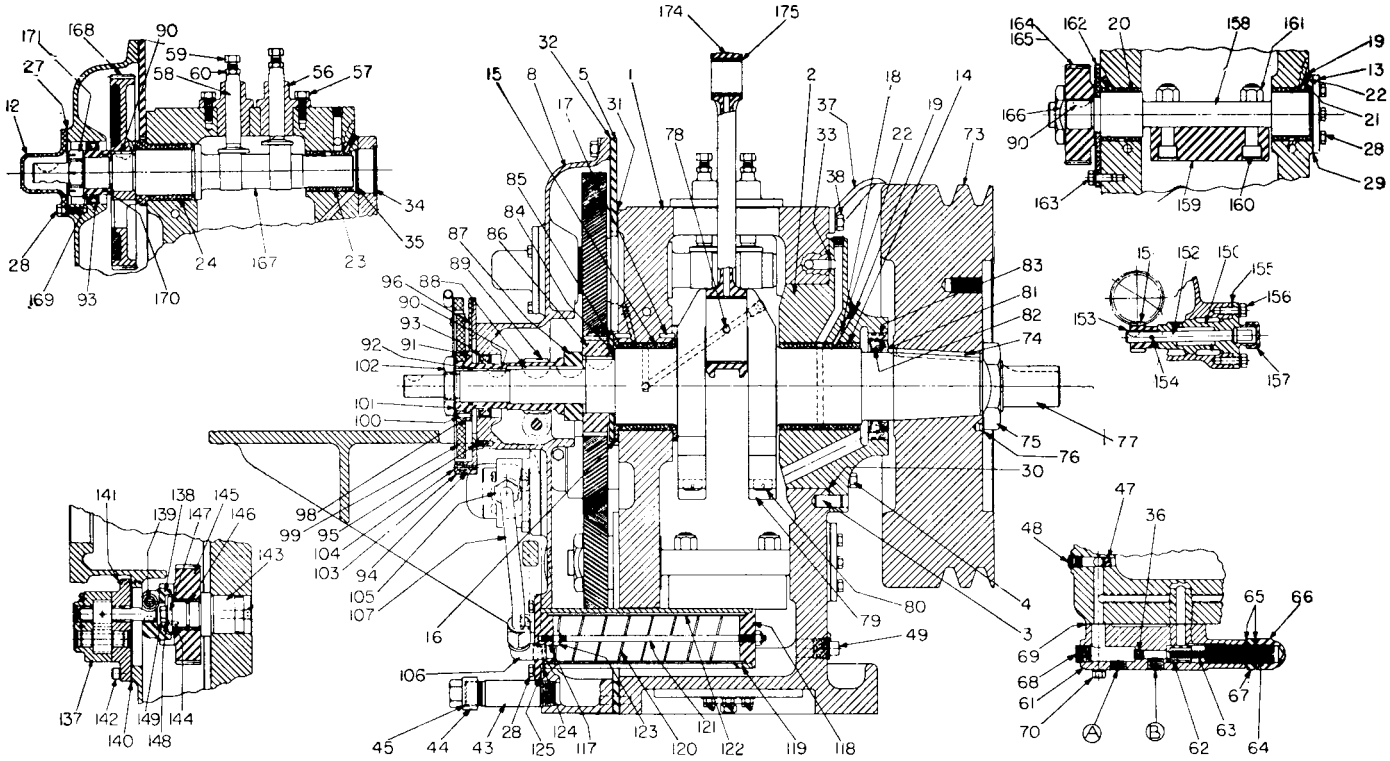

NOTE 1—Numbers refer to item numbers in Waukesha Catalog.

FIG. A1.17 Sectional View of CFR-48 Crankcase

Documents
Document Sharing Hub
Full document details: ASTM D909-00