NOTICE: This standard has either been superseded and replaced by a new version or withdrawn.
Contact ASTM International (www.astm.org) for the latest information

Designation: D991 – 89(Reapproved 2010)

Standard Test Method for Rubber Property—Volume Resistivity Of Electrically Conductive and Antistatic Products[1]

This standard is issued under the fixed designation D991; the number immediately following the designation indicates the year of original adoption or, in the case of revision, the year of last revision. A number in parentheses indicates the year of last reapproval. A superscript epsilon (ε) indicates an editorial change since the last revision or reapproval.

This standard has been approved for use by agencies of the Department of Defense.

1. Scope

1.1 This test method covers the determination of volume resistivity of rubbers used in electrically conductive and antistatic products.

1.2 This test method assumes that the surface conductivity is negligible compared with the conductivity through the specimen.

1.3 The values stated in SI units are to be regarded as the standard. The values given in parentheses are for information only.

1.4 *This standard does not purport to address all of the safety concerns, if any, associated with its use. It is the responsibility of the user of this standard to establish appropriate safety and health practices and determine the applicability of regulatory limitations prior to use.*

2. Referenced Documents

2.1 *ASTM Standards:*[2]

D3182 Practice for Rubber—Materials, Equipment, and Procedures for Mixing Standard Compounds and Preparing Standard Vulcanized Sheets

D4483 Practice for Evaluating Precision for Test Method Standards in the Rubber and Carbon Black Manufacturing Industries

3. Terminology

3.1 *Definitions of Terms Specific to This Standard:*

3.1.1 *rubber product, antistatic*—a rubber product sufficiently conductive to prevent a build-up of an electrical charge on the surface and sufficiently insulating to prevent an electrical hazard.

3.1.1.1 *Discussion*—Generally, antistatic rubber products are considered to have a resistance of 10^4 to 10^8 Ω.

3.1.2 *rubber product, conductive*—a rubber product having an electrical conductivity of sufficient magnitude that might be considered an electrical or thermal hazard.

3.1.2.1 *Discussion*—Generally, conductive rubber products are considered to have a resistance of less than 10^4 Ω at 120 V.

3.1.3 *volume resistivity*—the ratio of the electric potential gradient to the current density when the gradient is parallel to the current in the material.

4. Significance and Use

4.1 The electrical behavior of rubber products used in particular applications is important for a variety of reasons such as safety, static changes, current transmission, etc. This test method is useful in predicting the behavior of such rubber products.

5. Apparatus

5.1 *Electrode Assembly*—The electrode assembly (Fig. 1) shall consist of a rigid base made from an electrically insulating material having a resistivity greater than 10 TΩ·m (for example, hard rubber, polyethylene, polystyrene, etc.) to which a pair of current electrodes and a pair of potential electrodes are fastened in such a manner that the four electrodes are parallel and their top surfaces are in the same horizontal plane. Another pair of current electrodes identical with the first pair shall be fastened to a second piece of insulating material so that they can be superimposed on the specimen directly above the first pair. The current electrodes shall have a length at least 10 mm (0.4 in.) greater than the specimen width, a width between 5 and 8 mm (0.2 and 0.3 in.), and a height uniform within 0.05 mm (0.002 in.) between 10 and 15 mm (0.4 and 0.6 in.). The potential electrodes shall have a length and height equal to the current electrodes and shall be tapered to an edge having a radius of 0.5 mm (0.02 in.) maximum at the top surface. The distance between the potential electrodes shall not be less than 10 mm (0.4 in.) nor more than 66 mm (2.6 in.) and shall be known within ±2 %. The current electrodes shall be equidistant outside the potential electrodes and separated from them by at least 20 mm (0.8 in.). The electrodes shall be made from

[1] This test method is under the jurisdiction of ASTM Committee D11 on Rubber and is the direct responsibility of Subcommittee D11.10 on Physical Testing.

Current edition approved Jan. 1, 2010. Published April 2010. Originally approved in 1948. Last previous edition approved in 2005 as D991 – 89 (2005). DOI: 10.1520/D0991-89R10.

[2] For referenced ASTM standards, visit the ASTM website, www.astm.org, or contact ASTM Customer Service at service@astm.org. For *Annual Book of ASTM Standards* volume information, refer to the standard's Document Summary page on the ASTM website.

Copyright © ASTM International, 100 Barr Harbor Drive, PO Box C700, West Conshohocken, PA 19428-2959. United States

Documents
Document Sharing Hub
Full document details: ASTM D991-89(2010)

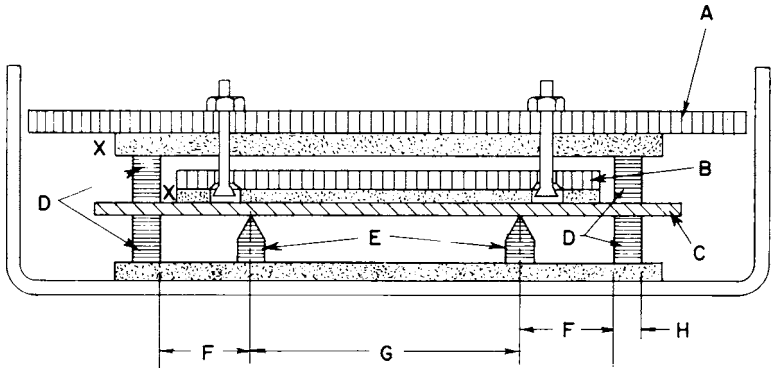

A — Mass for applying contact force between current electrodes and specimen
(300 N/m times specimen width in meters) (Note 1)
B — Mass for applying contact force between potential electrodes and specimen
(60 N/m times specimen width in meters) (Note 2)
C — Specimen
D — Current Electrodes
E — Potential Electrodes
F — Distance between current and potential electrodes (20 mm minimum)
G — Distance between potential electrodes (see Note 2in Section 9)
depends on specimen size.
H — Width of current electrode, 5 to 8 mm (0.2 to 0.3 in.)
X — Insulation

NOTE 1—For a specimen 150 mm (6 in.) wide, mass is approximately 4.5 kg (10 lb).
NOTE 2—For a specimen 150 mm (6 in.) wide, mass is approximately 0.9 kg (2 lb).

FIG. 1 Electrode Assembly

a corrosion-resistant metal such as brass, nickel, stainless steel, etc. Insulation resistance between electrodes shall be greater than 1 TΩ.

5.2 *Resistance-Measuring Device*—Resistance may be measured by any electrical circuit that enables the current through the current electrodes and the potential across the potential electrodes to be measured within 2 %. Suitable devices for measuring current are: (*1*) a precision milliammeter, or (*2*) potential measurement across a reference resistor (resistance value known within 2 % in series with the current electrodes. Suitable devices for measuring potential are: (*1*) a galvanometer having a sensitivity of 1 µA or less per scale division in a null-voltage circuit; (*2*) an electrostatic voltmeter having a d-c resistance greater than 19 TΩ; or (*3*) an electrometer such as a multirange voltmeter having an input d-c impedance greater than 0.1 TΩ (Note 1). In any case, the current through the potential electrodes during measurement must be less than 1 % of that through the current electrodes. A stable source of d-c potential shall be provided that can be adjusted to limit the power dissipated in the specimen between potential electrodes to approximately 0.1 W. Because of the large range of resistances covered by conductive and antistatic rubbers, separate equipment for measuring resistances above and below approximately 50 000 Ω is generally desirable.

NOTE 1—Schematic diagrams of a typical apparatus that have been found to be satisfactory are shown in Figs. X1.1 and X1.2.

5.3 *Electrode Contacts*—Masses shall be provided to produce a uniform contacting force across the width of the specimen of approximately 300 N/m (4.5 kg (10 lb)) on the standard sheet, 150 mm (6 in.) wide, by the current electrodes and 60 N/m (0.9 kg (2 lb)) on the standard sheet, 150 mm (6 in.) wide, by the potential electrodes.

6. Specimens

6.1 *Size*—The width of the specimen shall be between 10 and 150 mm (0.4 and 6 in.) and the length shall be between 70 and 150 mm (2.8 and 6 in.). The width shall be uniform within ±1 %. The thickness of cut specimens is specified in 6.3. Molded specimens are specially prepared as described in 6.2 and therefore have a thickness of 2.0 ± 0.2 mm (0.08 ± 0.008 in.).

6.2 *Molded Specimen*—Standard sheets prepared in accordance with Practice D3182 may be used, provided the surface of the uncured rubber is kept free of soapstone or other contamination, and the surface of the vulcanized sheet is not contaminated with mold lubricant. To avoid surface contamination and minimize distortion of specimen prior to test, sheets may be molded between sheets of moisture-sensitive cellophane, which can be readily removed after brief immersion in warm water. After removing the cellophane, the surface of the sheet should be patted dry, taking care not to bend or stretch the sheet.

6.3 *Cut Specimen*—The specimen shall be cut from a product that has not been buffed or abraded. Surfaces of the specimen shall be cleaned if necessary by rubbing with Fuller's earth and water, washing with distilled water, and drying in air. The specimen shall be uniform in thickness within ±5 %, not more than 6.6 mm (0.26 in.), and if possible, not less than 2 mm (0.08 in.) thick. Care shall be taken to avoid distortion of the specimen during preparation.

AVA Documents
Document Sharing Hub

Full document details: ASTM D991-89(2010)