NOTICE: This standard has either been superseded and replaced by a new version or withdrawn.
Contact ASTM International (www.astm.org) for the latest information

Designation: E1073 – 01 (Reapproved 2005)

Standard Test Method for Obtaining a Pharmacological Profile with Mice[1]

This standard is issued under the fixed designation E1073; the number immediately following the designation indicates the year of original adoption or, in the case of revision, the year of last revision. A number in parentheses indicates the year of last reapproval. A superscript epsilon (ε) indicates an editorial change since the last revision or reapproval.

1. Scope

1.1 This test method is designed as a simple and inexpensive initial screening procedure for new compounds with unknown pharmacological properties, or for the comparative bioassay of new members of a chemical series with class reference standards. The test method, which is applicable to most pharmacologically active compounds including pesticides, will properly rank order both acute lethality and potency with a minimum expenditure of test material. It is intended as the first step in a multi-tiered development program.

1.2 *This standard does not purport to address all of the safety concerns, if any, associated with its use. It is the responsibility of the user of this standard to establish appropriate safety and health practices and determine the applicability of regulatory limitations prior to use.*

2. Summary of Test Method

2.1 Mice are injected intravenously with a dose of the test material and then observed for reaction signs, first those that can be detected by nonmanipulative tests, and then those sensed during a series of manipulative tests.

2.2 Two technicians are required to perform the experiment. One injects the mice and records the data, while the other conducts the experiment at regularly scheduled time intervals and dictates the findings.

2.3 The results obtained using this procedure indicate the approximate median lethal dose (LD50), the approximate median level of nonlethal reactions (MED50), the reaction signs elicited at each dose level tested, and the degree of severity of those signs. In contrast to the more commonly used median effective dose (ED50), the MED50 value may have been generated by one or more responses at the same dose, and thus does not imply the 50 % level for a specific reaction sign.

2.4 By judicious selection of acceptance criteria, the elimination rate for compounds tested using this procedure can be tailored to any desired level.

3. Significance and Use

3.1 This test method is designed as an initial screening procedure for the selection of compounds worthy of more detailed study.

3.2 This test method is applicable to the study of most drugs and chemicals, and will properly estimate both lethal and minimally effective dose levels. Although it is designed for the study of single components, it can be used to study the comparative toxicity of mixtures or formulations. The method may not be applicable to oily substances which cause embolism upon injection.

3.3 This test method requires only small quantities of test materials (approximately 1 g), a fact that enhances its utility as the initial biological study for newly synthesized substances.

3.4 It is equally economical in its requirements for equipment, space, personnel, and animals. Only a small laboratory, simple test equipment, and two technicians are needed to conduct the experiments. Furthermore, an average of only thirty mice are required to conduct the entire test method.

3.5 The procedure is applicable to a wide variety of materials. When results of this test were compared with those from more detailed and specific animal tests, a high degree of correlation was obtained. Further evidence of the utility of the test was demonstrated by the fact that a high correlation of rank order potencies was found for a series of anticholinergics studied in both mice and men.

4. Apparatus

4.1 All of the apparatus used for this test method is simple and inexpensive. It can be made in any well-equipped laboratory workshop or, in some cases, obtained commercially.

4.2 The major components of the apparatus are illustrated in Figs. 1-5.

4.3 *Syringes and Needles*:

4.3.1 One-quarter millilitre glass Tuberculin syringes, fitted with 0.75 in. (19 mm), 27-gage needles are recommended for injection of all solutions except undiluted polyethylene glycol (PEG) solutions. In the latter case, 24-gage needles must be used to compensate for the viscosity of the solvent, and 50-µL syringes are required to measure accurately the small volumes that are administered.

[1] This test method is under the jurisdiction of ASTM Committee E35 on Pesticides and is the direct responsibility of Subcommittee E35.26 on Safety to Man.

Current edition approved April 1, 2005. Published May 2005. Originally approved in 1985. Last previous edition approved in 2001 as E1073 – 01. DOI: 10.1520/E1073-01R05.

Copyright © ASTM International, 100 Barr Harbor Drive, PO Box C700, West Conshohocken, PA 19428-2959, United States.

Documents
Document Sharing Hub
Full document details: ASTM E1073-01(2005)

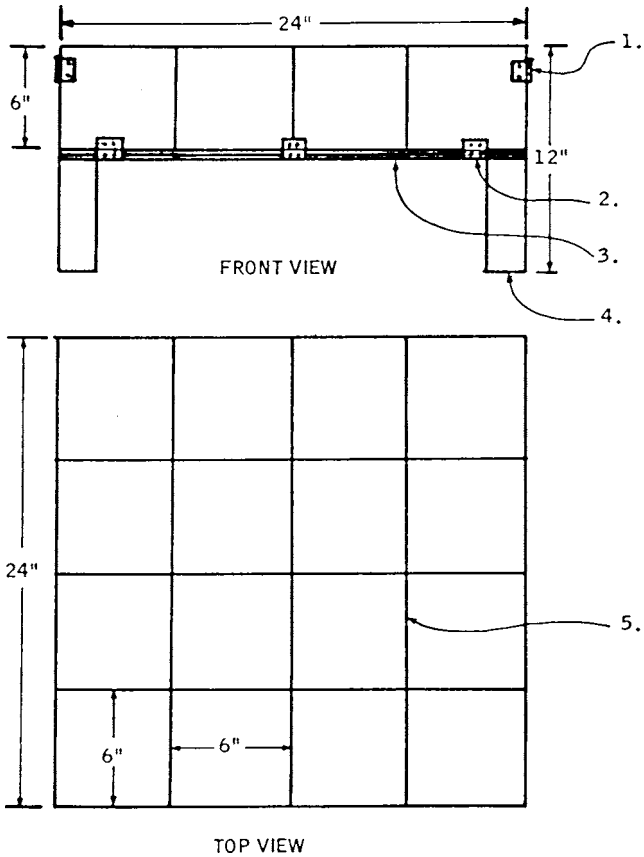

1. Hinge with easily removed pin.
2. Permanent hinge.
3. 24 by 24-in. plywood base with Lucite covering.
4. 2 by 6 by 24 in. long.
5. 6 in. high, ¼ in. thick Lucite divider, interlocked in egg-crate manner.

FIG. 1 Observation Platform

4.3.2 Although disposable syringes could be used for most of this work, calibrations on the glass syringes are more accurate. Furthermore, the possibility of a reaction between the plastic or rubber parts of disposable syringes with the test solutions, especially those containing PEG, exists.

5. Solvents

5.1 Any of the following solvents can be used up to the volumes shown for this test method if necessary. Usually, one of the first four is used for testing solids. Methylcellulose solutions are used to prepare suspensions, not true solutions. The test material is finely ground using an agate mortar and pestle before suspending it.

Solvent	Maximum Volume to Use
Distilled water	10 mL/kg
25 % aqueous solution PEG200[2]	10 mL/kg
Undiluted PEG200	2 mL/kg
0.5 % aqueous methylcellulose	10 mL/kg
0.1 N Hydrochloric acid	10 mL/kg
0.1 N Sodium hydroxide	5 mL/kg
10 % aqueous acetone	5 mL/kg
10 % aqueous ethyl alcohol	5 mL/kg
0.5 % aqueous acetic acid	10 mL/kg
1 % aqueous lactic acid	10 mL/kg

6. Test Solutions

6.1 One-gram quantities of test materials are sufficient for both solubility testing and injection.

6.2 If mixtures or formulations are to be studied, up to 10-g quantities may be needed depending on the expected dilutions to be tested.

6.3 Test solutions are usually made in volumes of 10 mL. Liquid test materials are prepared as volume/volume (v/v) solutions, and solids are prepared as weight/volume (w/v) solutions.

6.4 Stock concentrations of 10 mg/mL (10 mm^3/mL for liquids) shall be prepared initially. Serial dilutions are prepared from this stock solution as needed, keeping the number of dilutions to the minimum number required to allow total injection volumes of 0.05 to 0.25 mL for aqueous solutions or suspensions. When undiluted PEG200 is required as the solvent, injected volumes must be restricted to 0.01 to 0.05 mL per mouse. Acetone, NaOH, and ethyl alcohol solutions can only be injected at volumes up to 0.125 mL.

7. Test Animals

7.1 Male ICR Swiss mice, weighing 18 to 25 g, are used for this test method. Although either sex may be used if desired, experience has shown that results are more reproducible if only males are employed.

7.2 The number of mice required for screening each compound will depend on the potency of the material being tested but, overall, approximately 30 mice are required.

7.3 Quarantine all animals for a period of at least one week before use to ensure their good health and to acclimate them to their quarters and diet. Allow animals continuous access to feed and water.

7.4 In experiments where female mice are used, pregnant or lactating animals shall be excluded.

8. Procedure

8.1 Conduct the experiment in two phases, one in which the animals are carefully observed without being disturbed (see 9.4), and a second that requires handling (see 9.5).

8.2 Because a complete evaluation of the treated mice may take as long as 5 min, depending on the signs elicited, the injection schedule is left flexible until a response pattern is established.

8.3 Observe the injected mice at 3, 15, 30, and 60 min after intravenous injection in a lateral tail vein and hourly thereafter throughout the workday.

8.4 Conduct a range-finding study first. For aqueous solutions, inject the first animal with the stock concentration at 10 mL/kg of body weight, with a resultant dose of 100 mg/kg. Frequently this dose will prove to be lethal, with death

[2] The sole source of supply of the apparatus known to the committee at this time is PEG200 or Carbowax 200 available from Union Carbide Corp., Ethylene Oxide/Glycol Div., 39 Old Ridgeberry Rd., Danbury, CT 06817-0001. If you are aware of alternative suppliers, please provide this information to ASTM International Headquarters. Your comments will receive careful consideration at a meeting of the responsible technical committee [1], which you may attend.

Documents
Document Sharing Hub

Full document details: ASTM E1073-01(2005)

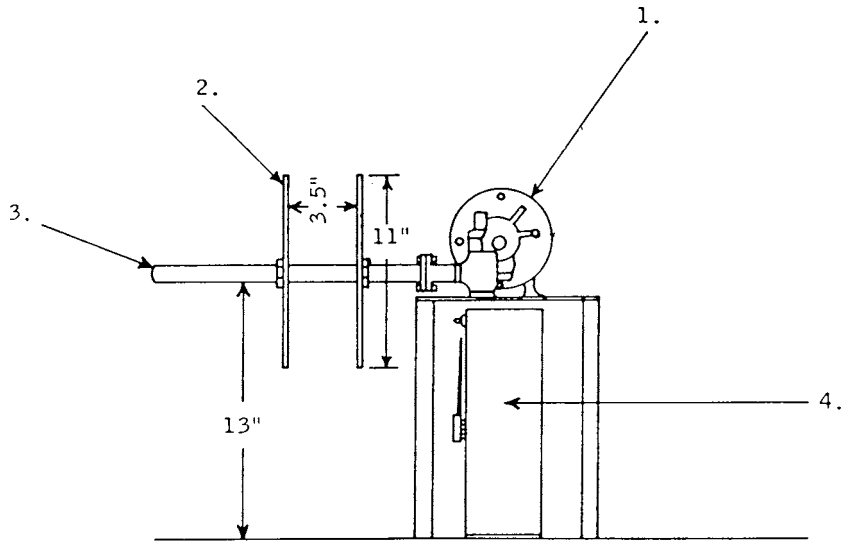

1. Bodine speed reducer motor—Type NSE-11 RG, 21 r/min reducer output rating. Voltage to the motor is regulated using a variable voltage transformer ("Powerstat").
2. Lucite divider.
3. 1-in. diameter wood dowel.
4. Laboratory time ("Gra-Lab").

FIG. 2 Rota-rod Apparatus

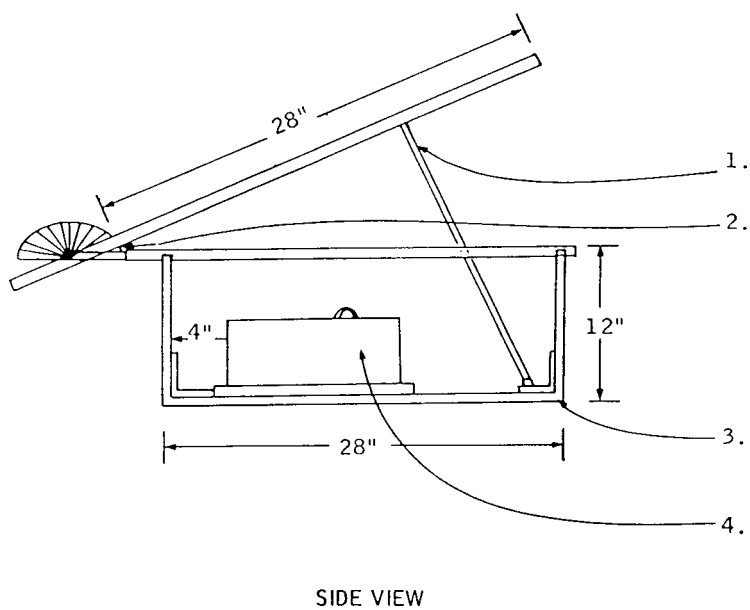

1. Support rod.
2. Protractor.
3. End panels and base are 10 in. wide.
4. 12 by 9½ by 5-in. elliptical sheet metal enclosure for air blast box. The enclosure is centered across the base of the narrow strip apparatus; the air blast box is centered inside the elliptical enclosure.

FIG. 3 Narrow Strip Apparatus, Showing the Location of the Air-Blast Enclosure

occurring in 1 to 2 min. Should that be the case, dose a second mouse at 3.16 mL/kg body weight (31.6 mg/kg).

8.5 Make a 1 + 9 dilution of the stock solution for the next two doses, which are spaced at 0.5-log intervals below the preceding one. Repeat this procedure until a mouse survives for 5 min.

8.6 At this point, test a second mouse at the apparent nonlethal dose. If both mice survive, test doses decreasing by 0.5-log intervals using 2 mice per dose until the no-effect level is reached. Test each animal's responses at the predetermined time intervals, so that the effect of intermediate doses is obtained in detail.

8.7 These data are sufficient to allow a decision to be made as to the desirability of further testing.

8.8 If further testing is indicated, obtain a more accurate estimate of the LD50 and MED50. Use the lethal and no-effect

Documents
Document Sharing Hub

Full document details: ASTM E1073-01(2005)

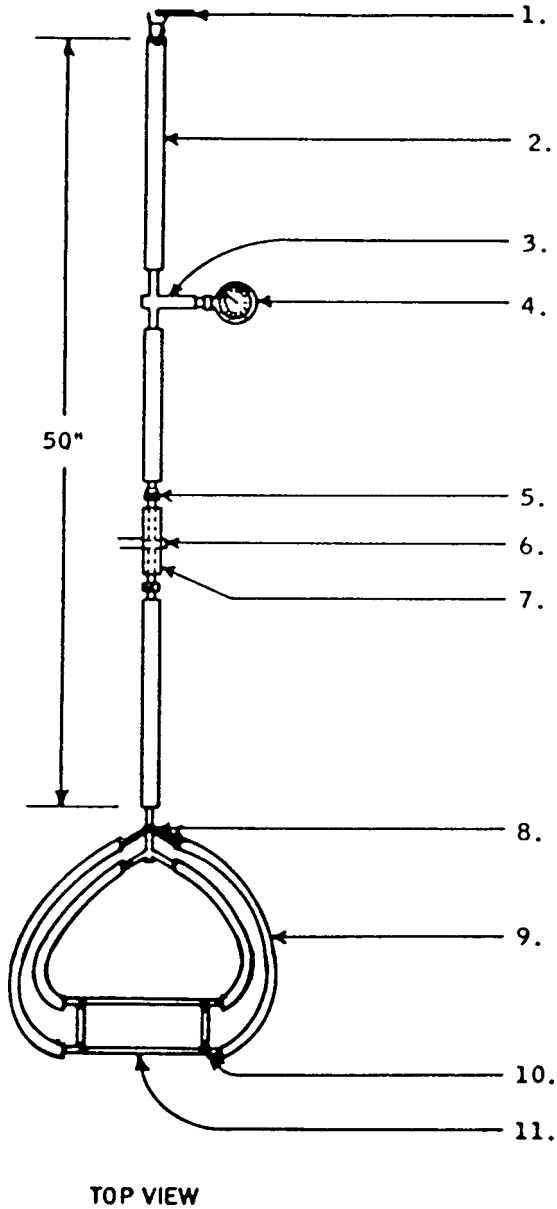

1. Compressed air supply.
2. Rubber pressure tubing, 9/16-in. outside diameter, 3/16-in. inside diameter.
3. Brass T tube, 5/32-in. inside diameter. T arms.
4. Ashcroft pressure gage (0 to 60 psi) Manning, Maxwell and Moore, Inc. Stratford, CT.
5. Brass hosecock with 1/8-in. diameter bore.
6. Rotating shaft (1/8-in. diameter hole) resting in steel bearing.
7. Steel bearing.
8. Side-armed steel tube, 2½ in. long, 2-in. side arms, and 3/16-in. diameter bore.
9. Thirteen-inch long pieces of rubber tubing, 1-cm outside diameter, 0.5-cm inside diameter.
10. Lucite nipple cemented at right angles at the bottom of each corner. Each nipple is 1 in. long, 3/8-in. outside diameter, 1/8-in. inside diameter Lucite tubing.
11. Air blast box with internal dimensions 4½ in. (L) by 2½ in. (W) by 1½ in. (H), made of clear ¼-in. Lucite. The hole through the wall of the box at the bottom of each corner is 1/8 in. diameter and is aimed at the top of the diagonally opposite corner.

FIG. 4 Air Blast Apparatus

levels observed in the range-finding study as the points for additional dosage selection.

8.9 Test a total of 4 mice at each of four doses spaced 0.1-log apart for both the LD50 and MED50 determinations. Inject 2 or 3 additional mice at the apparent LD50 level, and 4 at each of the three next three lower levels for the observations in Section 9. Use a similar design for the MED50, except that the successive 0.1 log doses are above the apparent no effect level.

8.10 Include solvent injected control mice in these studies as needed. At least 2 control mice are required for comparison with test material treated mice. One should be injected first and

Documents
Document Sharing Hub

Full document details: ASTM E1073-01(2005)